LBL-1616 c.1
UC-37 Instruments

A NONDISPERSIVE SOFT X-RAY FLUORESCENCE SPECTROMETER FOR QUANTITATIVE ANALYSIS OF THE MAJOR ELEMENTS IN ROCKS AND MINERALS

A. J. Hebert and K. Street, Jr.

April 1973

Prepared for the U.S. Atomic Energy Commission
under Contract W-7405-ENG-48

For Reference

Not to be taken from this room

LBL-1616
c.1

Printed in the United States of America
Available from
National Technical Information Service
U.S. Department of Commerce
5285 Port Royal Road
Springfield, Virginia 22151
Price: Printed Copy $4.00; Microfiche $0.95

DISCLAIMER

This document was prepared as an account of work sponsored by the United States Government. While this document is believed to contain correct information, neither the United States Government nor any agency thereof, nor the Regents of the University of California, nor any of their employees, makes any warranty, express or implied, or assumes any legal responsibility for the accuracy, completeness, or usefulness of any information, apparatus, product, or process disclosed, or represents that its use would not infringe privately owned rights. Reference herein to any specific commercial product, process, or service by its trade name, trademark, manufacturer, or otherwise, does not necessarily constitute or imply its endorsement, recommendation, or favoring by the United States Government or any agency thereof, or the Regents of the University of California. The views and opinions of authors expressed herein do not necessarily state or reflect those of the United States Government or any agency thereof or the Regents of the University of California.

0 0 0 0 3 9 0 4 1 0 1

A NONDISPERSIVE SOFT X-RAY FLUORESCENCE SPECTROMETER FOR QUANTITATIVE ANALYSIS OF THE MAJOR ELEMENTS IN ROCKS AND MINERALS*

A. J. Hebert and K. Street, Jr.

Lawrence Berkeley Laboratory
University of California
Berkeley, California 94720

April 1973

ABSTRACT

A lithium drifted silicon detector and a multichannel analyzer system have been combined with a multiple anode soft X-ray generator and a high vacuum sample handling system to provide an X-ray fluorescence unit for quantitative analyses of the elements from oxygen to iron. A relatively rapid, accurate, and reproduceable sample preparation technique and a method for sample matrix absorption corrections are described.

INTRODUCTION

The use of lithium drifted silicon detectors for the detection of X-rays was reported several years ago (1), however, inadequate resolution for photons of less than 10 keV made even qualitative soft X-ray analysis difficult. The production of better crystals and improvements in electronic detection techniques (2) have led to the present generation of high resolution detectors which are capable of detecting and resolving carbon, nitrogen, and oxygen X-rays (3,4).

The spectrometer and techniques described here are the results of efforts to extend the use of these detectors to quantitative analysis of the elements from oxygen to iron through the development of a multiple anode soft X-ray generator, a simple high vacuum sample transfer and referencing system, and a relatively rapid, accurate and reproduceable method of sample preparation.

In addition, a method of calculating sample matrix absorption effects is described which gives easily applied corrections for compositional differences between a calibration standard and an unknown sample. This in turn allows an accurate analysis of widely varying types of samples with a single calibration standard.

MULTIPLE ANODE SOFT X-RAY GENERATOR

Anode and Filter Assembly. A schematic sketch of the spectrometer is shown in Figure 1. The rotating anode mount accepts six 6.35 mm × 22.2 mm hollow cylindrical anodes which are held in place by 3.175 mm hand matched copper rod screws passing through the center of each anode. One exception is the silver anode which was made by plating 0.051 mm of high purity silver on a 6.30 mm

diameter solid copper cylinder screw. The other anode cylinders were made from 99.98% or higher purity magnesium, aluminum, silicon, titanium and nickel (5).

The anode cylinder holding screws are firmly tightened to provide maximum thermal contact between the anode material and mount. This is particularly important in the cases of magnesium and aluminum since they are relatively low melting materials, and poor contact may cause overheating and contamination of the spectrometer interior with their vapor. The malleable nature of Mg and Al allows good contact with the cylinder wells after applying a firm turn to the holding screws.

Each anode has two nickel plated copper partitions between it and its neighbors to eliminate cross contamination from line of sight sputtering.

A cross sectional sketch of the anode assembly mounting is shown in Figure 2. Referencing of the anodes which are 60° apart is accomplished with a grooved plate attached to the anode mount. Spring loaded 4.76 mm alumina balls provide electrical insulation and reproduceable 60° click-stops as the targets are rotated into position.

The top of the rotating anode is gold plated to assure good electrical contact with a gold plated stationary spring wire which carries the anode current. The anode current passes through a 10^4 ohm resistor to ground and the voltage thus generated provides an accurate measure of the current. The voltage is fed into a voltage to frequency converter and the resultant pulses are attenuated and fed to the multichannel analyzer being used for pulse height analysis. Pulse attenuation is adjusted so that the current signal is stored in the first few analyzer channels for an accurate calibration of each run.

Water cooling is supplied via a thin tube down the center of the rotating anode mount. The stationary water source and return tubes are concentric and are coupled to the rotating anode by a fitting with an O-ring seal on the return tube.

A summary of the anodes and filters used in the spectrometer is given in Table I. The filter foils are mounted on carbon washers which are held in place in recesses on the filter wheel with spring retainer rings.

The magnesium filter was made by slowly etching a 0.0254 mm high-purity foil with a dilute 100:1 aqueous solution of reagent grade HNO_3 to a thickness of roughly 0.015 mm.

The silicon filter was made by vapor depositing high purity silicon onto 0.0064 mm mylar film. Three cross stacked foils yielded the equivalent of 2.35 mg/cm^2 of Si or 0.015 mm of Si on 0.018 mm of mylar.

The silver foil was made by vapor deposition on detergent coated glass with subsequent floating and mounting of the free foil on a carbon washer.

The filter wheel is made of copper, and both it and the anode are nickel plated.

Electric Gun. A cross sectional schematic diagram of the electron gun is shown in Figure 3. The interior of the nickel plated soft iron case is lined with 0.127 mm tantalum foil, spot welded into place prior to filament or grid placement. The back of the gun has a large opening which allows the outer tantalum surface, with its higher emissivity, to radiate to the chamber interior.

Initial experiments, in which iridium filaments were used, indicated that the case could become a field emitter as power input to the filaments exceeded 8 watts (8 volts DC @ 1 amp), and as the filament temperature

approached 2200°C. This condition in turn caused current monitoring problems and an occasional low pressure discharge between the anode and electron gun. Filament lifetimes were usually less than 100 hours.

The present thorium oxide coated filaments readily provide adequate electron currents at a power input of roughly 4 watts and an estimated filament temperature of 1400°C. The stable nature of the filament input power level indicates little if any appreciable filament deterioration during several months of operation.

The filament coils are made by wrapping 5 cm of 0.10 mm iridium wire onto the thread grooves of an 0-80 screw held in a hand rotatable chuck. They are coated with ThO_2 while in place in the electron gun by placing a drop of saturated solution of thorium nitrate on each coil and passing a small current through the wire in order to heat-evaporate the solution. The coil is then brought to a dull red heat to convert the residue on the filament to ThO_2.

The grid is made of 0.10 mm iridium wire which has been spot welded to a 1.0 mm diameter tantalum wire frame at 1.25 mm intervals.

For most analyses 150 μA of current to the anode is sufficient to drive the spectrometer at several thousand detected events per second. Higher data aquisition rates are possible, but the present level of amplifier and analyzer dead time corrections make such rates undesirable when comparing quite different samples, such as a granite and a peridotite, where the counting rates may differ appreciably. Future pulsed operation of the electron gun in a synchronous mode with the detector amplifiers may alleviate this restriction.

Observation of the discoloration patterns on the anodes after many hours of analysis indicate a smooth hot spot free region of electron bombardment and X-ray generation of roughly 50 mm^2 in area.

Experiments on X-ray flux reproducability indicate variations of the order of 0.5% or less for each anode when rerun in place over a period of one hour. The reproducability from day to day with target rotation and sample changes is of the order of one to two percent.

The electron gun filament is powered by a ten amp, 18 volt DC filament supply with 12 kV isolation (6). Under normal operating conditions the filament draws roughly 0.8 amps at 5 volts DC. The electron gun is operated at 0 to -10 kV DC with respect to ground. The voltage is supplied by a 0.1% regulated, 0 to 20 ma, 15 kV DC unit.

Grid voltage is supplied by a small 9 volt battery (lifetime, 1000 hrs @ 10 ma). The grid draws roughly 80 μA of current under present operating conditions.

An alternative filament and grid supply has been developed (7) which can be used to modulate or pulse the electron beam via a light signal transmitted through a light pipe to a photo sensor at the high negative filament and grid potential. A photo sensor circuit converts the light to a grid voltage. In this manner a four volt DC signal near ground potential may be converted to a change in grid potential with respect to the filament of from +9 volts to -5 volts. This in turn causes a 10^4 attenuation of the electron beam and X-ray flux. The observed response time for the anode current is of the order of one μ sec.

VACUUM SYSTEM

A cross sectional sketch of the spectrometer vacuum chamber is shown in Figure 4. The chamber walls are made of 1.25 cm thick soft iron plate. The plate acts as an effective magnetic shield so that the electron gun and X-ray source geometry are constant even though conditions in the laboratory may vary. The chamber volume of roughly 2 liters is pumped with a 50 liter per second ion pump and a liquid nitrogen cold finger.

The chamber interior is nickel plated to preserve a relatively noise free background spectrum. The low fluorescent yield for nickel L X-rays ($\sim$ .005) is especially helpful in this respect. Under normal operating conditions no noticeable Ni Li-X-rays or other unexpected background signals are observed.

All moving parts are provided with double or multiple O-ring seals that provide continuous differential pumping. The areas between the atmosphere and the spectrometer chamber are pumped with a cryo pump (8) that maintains a vacuum of 10^{-4} torr or better. Movements of the rotating anode, the sample transfer shaft, or the detector window gate valve cause only minor fluctuations in the analysis chamber pressure, which usually holds at between 5×10^{-8} and 1×10^{-6} torr.

When it is necessary to bring the spectrometer chamber up to air, a 0.13 mm thick berillium window is moved in place of the 56 ugm/cm^2 aluminum window in order to maintain the detector at a high vacuum. Both windows are mounted on an aluminum paddle which slides over a O-ring, thus providing a two position gate valve (4). The paddle is held against the O-ring by a teflon bearing surface. A channel has also been added behind the aluminum window to provide better pressure equalization since slight pressure differentials can damage the delicate aluminum window as the chamber is brought up to air or pumped back down.

Slow leak metering valves are used to slowly bring the system up to air or to rough it back down to 10^{-2} torr. A larger valve is opened to rough to 10^{-4} torr or better prior to starting the ion pump.

The aluminum window between the detector and sample is made by vapor depositing approximately 30 ug/cm^2 of high purity aluminum onto glass which has

been lightly coated with detergent. The film is floated off on distilled water and two pickup passes are then made with a carbon washer to make up the 56 ugm/cm^2 window. The windows are almost always pinhole free to white light and thus provide an optical barrier to visible photons which generate interfering signals in the detector. The window also serves as a barrier to condensable molecules in the spectrometer chamber.

The sample transfer shaft has a series of 7 O-rings surrounding two sets of six sample referencing cells. This allows insertion of a new set of six samples with maintenance of differential pumping while the set previously analyzed is being removed. Sample transfer is accomplished with the turn of a single crank and roughing of the sample cells to 10^{-4} torr or better occurs automatically as the transfer shaft moves the cells over roughing ports.

In cases of rock, mineral, alloy or other low vapor pressure material analyses, the total time necessary to place six samples in their cells and transfer them to the analysis chamber, including a four minute stay in the roughing position, is 5 minutes. Analyses are usually performed at 8×10^{-7} torr or less.

Sample cells are machined into the type 303 stainless steel shaft with a slot cutter. It is important that the 12 sample referencing surfaces shown in Figure 1 be accurately placed with respect to the O-ring axes. In the present system the referencing surfaces are all at the same distance from the O-ring axes within 0.004 cm. Each cell is accurately parallel to one of the three 120° referencing planes. Accurate sample positioning is provided by three spring, loaded balls which click into referencing grooves on the surface of a cylinder that travels with the sample transfer shaft.

Each cell has a phosphor bronze spring designed to hold a 2.54 cm diam. by 1 to 2 mm thick sample disk against the referencing surface.

DETECTOR

The lithium drifted silicon detector was built at U.C.L.B.L. and is similar to those described previously (3,4), with the exception of using a side mount detector arrangement with crystal cooling occurring via copper battery cable.

Battery cable braid was placed between the liquid nitrogen reservoir and the detector in place of the customary copper bar in order to decouple the detector from the acoustical noise produced by the bubbling of an exceptionally effervescent liquid nitrogen reservoir.

The detector is of standard "top-hat" design with pulsed opto feedback circuitry. It has a resolution of 190 eV FWHM for iron K_α X-rays, a Fano factor of 0.12, and electronic resolution of 108 eV. The observed FWHM for sodium X-rays at 1.04 keV is approximately 140 eV.

The detector is maintained at liquid nitrogen temperatures and therefore acts as a trap for molecules such as H_2O and CO_2. The buildup of condensables on the detector surface results in a decline in efficiency, which in the case of oxygen at 530 eV may amount to 10% per week with the detector chamber at 10^{-7} torr or better. The loss of sodium detection efficiency at 1.04 keV is much slower and amounts to roughly 2% per week.

To restore efficiency, the detector is turned off and brought to room temperature for 30 minutes while under vacuum and being pumped by the vac-ion pump. The system is ready to operate again upon recooling within an hour. The detector resolution has not changed after more than 10 such cyclings and the efficiency for oxygen X-rays has been restored to approximately the same level each time.

SAMPLE PREPARATION

Rocks and Materials Suitable for $LiBO_2$ Fusion. The sample is ground to a powder with a particle size of the order of 0.1 mm or less. The powder is then mixed with spectroscopic grade lithium metaborate (9), $LiBO_2$, in a 10:1 ratio of $LiBO_2$ to sample. At present 200 mg of powdered sample fused with 1.80 g of $LiBO_2$. Each bottle of $LiBO_2$ is checked for weight loss on fusion and the correction, which is usually less than 2%, is applied to the ratio.

The fusion is presently performed over a Fisher burner with air and natural gas inlets. The weighed powders are carefully mixed in a gold plated platinum crucible. The mixture is then slowly brought to approximately 900°C for 4 minutes. During this time the crucible is swirled with tongs over the burner with a gloved hand. The liquid mass is also stirred with a 3 mm diam. vitreous carbon rod (10) that is being rotated in a small battery powered cocktail stirrer. Following a final 5 or 10 second stir, the glass is poured into a 2.54 cm diameter nickel plated copper ring resting on a polished vitreous carbon disk (10) which is at 250°C. A thick flat gold foil that is silver soldered to a copper block is then brought down on the molten glass blob to press it into the ring and against the carbon. The gold surface is held parallel to the plane of the ring by a simple lever system, much like an old fashioned orange juice maker. The gold foil press is removed after 2 seconds and the glass pill is allowed to anneal at 250°C for several minutes.

The vitreous carbon disk and glass pill rest in an aluminum holder on a hot plate. The sample-carbon disk-holder unit can be moved to a second hot plate and replaced by one of several units, ready for the next pour and press.

The polished vitreous carbon surface appears to be free of detectable major element contaminants as judged from analysis in the spectrometer of pure

$LiBO_2$ samples. The polished surface is easily cleaned with distilled water and alcohol in a few seconds.

The time necessary to weigh and prepare a glass fusion sample is usually less than ten minutes with a failure rate of less than 10%. Most failures in preparing a usuable pill result from an incomplete transfer of molten glass from the gold plated platinum crucible. This usually indicates that it is time to re-gold plate the crucible in order to form a new alloy surface which the molten glass does not adhere to.

Fusions are carried out at temperatures less than 950°C. At higher temperatures both the sample and the vitreous carbon disk may be damaged by sticking and thermal shock chipping of the carbon. Vitreous carbon has a hardness close to that of silicon carbide and damaged disks may be reground and polished in the same manner as glass.

In addition to sticking and thermal shock, we have observed significant losses of sodium and potassium from standard rock samples in cases where the fusion temperature has exceeded 1000°C.

The nickel plated copper rings which retain the glass preserve an analyzeable surface in the event of cracking during the annealing process. The rings are made from standard 2.54 cm O.D. × 0.8 mm wall copper tubing. Each ring is roughly 1.27 mm thick and has been machined from the tubing with a cutting tool which leaves a burr on both inside edges. The burrs serve as locking tabs for the glass. After machining, the rings are degreased and given a flash coating of nickel to suppress copper oxide formation.

The glass sample pills are stored in a vacuum dessicator to minimize the effects of long term exposure to the laboratory atmosphere. Moisture

The "absorption correction", A^{K}_{Ti}, is the factor in braces in the equation above.

$$A^{K}_{Ti} = 1 + f(MgY^{Mg}_{Ti\ K} + AlY^{Al}_{Ti\ K} + \ldots\ldots - L)$$

Mg = weight fraction of MgO in the original sample

Al = weight fraction of Al_2O_3 in the original sample, etc.

L = loss, i.e., weight fraction of volatiles lost in the fusion.

The Y's are given by expressions like

$$Y^{Mg}_{Ti\ K} = \frac{\phi(\mu^{Mg}_{Ti} - \mu^{LB}_{Ti}) + (\mu^{Mg}_{K} - \mu^{LB}_{K})}{\phi(\mu^{LB}_{Ti} - \mu^{LB}_{K})} \quad \text{where}$$

$Y^{Mg}_{Ti\ K}$ corrects for the absorption due to MgO in the sample when the incoming X-rays are Ti X-rays and the outgoing X-rays are those of potassium.

μ^{Mg}_{Ti} = mass absorption coefficient for Ti X-rays in MgO

μ^{LB}_{Ti} = mass absorption coefficient for Ti X-rays in $LiBO_2$

μ^{Mg}_{K} = mass absorption coefficient for potassium X-rays in MgO

μ^{LB}_{K} = mass absorption coefficient for potassium X-rays in $LiBO_3$

$\phi = \frac{\text{Sec}\alpha}{\text{Sec}\beta}$ where α is the angle of the incoming X-rays to the sample normal and β is the outgoing angle. In the present apparatus $\phi = 1.233$.

The mass absorption coefficients tabulated by McMaster et al. (13) were used in the work reported here.

In the analysis of the USGS standard rocks the largest absorption corrections occur in the determination of iron using nickel X-rays. The extreme

values are $A_{Ni}^{Fe}(PCC-1) = 1.381$ and $A_{Ni}^{Fe}(BCR-1) = 1.592$. For the lighter elements the absorption corrections are typically much smaller. For example in analysis for magnesium using aluminum X-rays the lowest and highest corrections are $A_{Al}^{Mg}(G-2) = 1.010$ and $A_{Al}^{Mg}(DTS-1) = 1.042$.

The good consistency obtained in the analysis of the six USGS standards, which vary widely in composition, indicates that the calculated absorption corrections are adequate.

The sodium and magnesium analyses required 10 minutes each per sample. Under the same conditions, if two to four percent numbers are adequate for Na, Mg and Ti at these levels, then one percent numbers can be obtained for the remaining elements that are present at or above the 1% level in a total analysis time of 10 minutes per sample.

Results obtained for manganese and chromium during these analyses have not been included in Table II due to uncertainties in absolute calibration. Once an accurate calibration is obtained, the spectrometer should yield a 1% Mn or Cr analysis at the 1000 ppm level in less than five minutes, and at the same time provide good numbers for the rest of the elements from potassium to iron.

Closer calibration is also planned for titanium, including a more accurate assessment of the effect of barium and other L X-rays in cases where interference is expected.

The sensitivity for a five minute analysis at 10:1 dilution of rock in $LiBO_2$ varies from 0.09% for Na to 0.01% for Fe. This is due to variations in cross sections, absorption effects, and fluorescent yields for the elements.

The present sensitivity for biological samples such as pressed protein powder or freeze dried blood varies from 0.8% for oxygen to 0.001% for iron in

pickup by the glass is less than 1 part in 10^4 per day, however, surface changes have been observed for some samples after several months of laboratory exposure.

If less than 200 mg of sample is initially available, a ring or cup which requires less volume of glass may be used to scale down requirements, or the pill and standard may be made at a higher $LiBO_2$ to sample ratio.

Other Samples. Biological samples may be prepared by drying and powdering the solid or by freeze drying the liquid. The resultant powder is pressed into a 25 mm diameter by 0.75 mm thick pill. The pills are then held between thin aluminum washers for analysis.

For oxygen analyses on rocks or other materials, powder is dusted onto a mylar tape surface with a sample ring acting as a frame.

Filter paper disks from air monitors or other filtration procedures may be analyzed by simply placing the disks between aluminum washers. The filter papers may be backed up with additional thicknesses of paper or with a pure nickel foil if the sample does not constitute an infinite thickness for some of the higher energy X-rays.

In cases where the samples have high moisture content or other volatiles present, they are stored in a high vacuum dissicators prior to being placed in the spectrometer.

RESULTS AND DISCUSSION

Analyses of three separately prepared sets of six USGS standard rock powders indicate reproduceability and accuracy of the order of one to two percent for eight major elements when calibrated against published wet chemical

results (11). A comparison of values is given in Table II. The reported values were obtained with a five minute average analysis time per element, or 40 minutes per sample. The deviations in the three sets are in agreement with the expected statistical uncertainties.

Examples of the spectra observed with the six different anodes are shown in Figure 5.

Absorption Corrections. Corrections for the absorption of X-rays due to the major elements in the sample were made in a manner similar to that used by Norrish and Chappell (12). Measured X-ray intensities are corrected to a "standard state" taken as an infinitely dilute $LiBO_2$ matrix, i.e., observed X-ray intensities were corrected to what they would be if the only absorber were $LiBO_2$. Using as an example the determination of potassium excited by titanium X-rays, the weight fraction, W_K, of K_2O in the original sample is given by

$$W_K = \frac{1}{f} B^K_{Ti} \{1 + f(MgY^{Mg}_{Ti\ K} + AlY^{Al}_{Ti\ K} + \ldots\ldots\ -L)\}\ I_K$$

f = weight fraction of sample in $LiBO_2$ matrix (0.1016 in the analysis reported in Table II)

B^K_{Ti} = a constant for given incoming X-rays (Ti in the example) and outgoing X-rays of potassium. It contains the geometrical and detection efficiency factors of the apparatus, the efficiency of production of potassium X-rays by Ti X-rays, and the absorption of an infinitely dilute $LiBO_2$ matrix. It is determined by a measurement using a sample with a known content of K_2O.

I_K = the measured intensity of potassium X-rays per unit current.

a 5 minute analysis. Preliminary experiments indicate that one to two percent oxygen analyses may be obtained for rock or mineral powders in ten minutes with the sample on tape procedure described above. Examples of observed spectra are shown in Figure 6.

In obtaining these results, we purposely operated the spectrometer below its design capabilities in order to guard against any changes in spectrometer efficiency or other uncertainties which arise from higher counting rates while analyzing the three standard rock sets. This also allowed an accurate check on our sample preparation technique.

The spectrometer is now being tested under more efficient operating conditions. The preliminary experiments indicate that it will perform reliably and provide analyses comparable to or better than those reported here in fifteen minutes per unknown fused rock or mineral sample.

ACKNOWLEDGMENTS

We wish to thank Gardener G. Young for his expert advice and help in fabricating the spectrometer. We thank Carson B. Haines, Alexander Comazzi, Gordon E. Steers, Michiyuki Nakamura, John A. Mendes, Blair V. Jarrett and Donald F. Malone for their help and advice in mechanical and electronic fabrication. We also thank Robert D. Giauque, H. R. Bowman, Frank Asaro, Joseph M. Jaklevic, Donald A. Landis, and William L. Searles for many informative and useful discussions. A special note of thanks is also extended to Brent P. Fabbi of USGS at Menlo Park, Calif. for several helpful discussions on sample preparations and dispersive X-ray fluorescence analysis.

LITERATURE CITED

*Work performed under the auspices of the U. S. Atomic Energy Commission.

(1) H. R. Bowman, E. K. Hyde, S. G. Thompson, and R. C. Jared, Science, 151, 562 (1966).

(2) E. Elad, Nucl. Instr. Methods, 37, 327 (1965).

(3) D. A. Landis, F. S. Goulding, R. H. Pehl, and J. T. Walton, I.E.E.E. Trans. Nucl. Sci., 18-1, 115 (1971).

(4) J. M. Jaklevic and F. S. Goulding, I.E.E.E. Trans. Nucl. Sci., 18-1, 187 (1971).

(5) Ventron Corp., Alfa Products, 2098 Pike St., San Leandro, Calif. 94577.

(6) UCLBL Drawing #3X9783.

(7) Designed by M. Nakamura, UCLBL Drawing #3X9783-13X2542-51-52.

(8) R. Hintz and R. Parsons, UCRL-17299 (March 1967), distributed by National Technical Information Service.

(9) Southwestern Analytical Chemicals, Austin, Texas.

(10) Beckwith Carbon Corp., 16140 Raymer St., Van Nuys, Calif. 91406.

(11) I. S. E. Carmichael, J. Hampel, and R. N. Jack, Chem. Geol., 3, 59 (1968).

(12) K. Norrish and B. W. Chappell, Physical Methods in Determinative Mineralogy, pg. 196, J. Zussman, ed., Academic Press (1967).

(13) W. H. McMaster *et al.*, UCRL-50174 (May 1969), distributed by National Technical Information Service.

Table I. Anode and Filter Data.

Anode	Filter Element	Filter Thickness(mm)	X-Ray Energy (keV)	Elements Analyzed
Mg	Mg(K edge)	0.015	1.25	O, F, Na, and L X-rays of some heavier elements
Al	Al(K edge)	0.013	1.49	O, Na, Mg
Si	Si(K edge)	0.015	1.74	O, Na, Mg, Al
Ag	Ag(L edge)	0.001	2.98	Al, Si, P, S, Cl
Ti	Ti(K edge)	0.025	4.51	Si, Cl, K, Ca, Sc
Ni	Ni(K edge)	0.025	7.48	Cl, K, Ca, Sc, Ti, V, Cr, Mn, Fe

Table II. A comparison of present XRF results and preferred values for major elements in USGS standard rocks as percent oxide. The numbers in parentheses represent one standard deviation at the last digit for the observed counting statistics.

Sample	Source	Na_2O	MgO	Al_2O_3	SiO_2	K_2O	CaO	TiO_2	FeO
G-2	XRF	4.17(5)	0.77(2)	15.26(9)	69.2(2)	4.50(2)	1.98(2)	0.51(1)	2.40(1)
	Preferred Values	4.15	0.77	15.31	69.29	4.51	2.00	0.48	2.38
	Difference	+0.5%	0	-0.3%	-0.1%	-0.2%	-1.3%	+6%	-1.4%
GSP-1	XRF	2.84(5)	0.99(2)	15.02(9)	67.1(2)	5.54(2)	2.08(2)	0.67(1)	3.81(1)
	Preferred Values	2.86	0.95	14.92	67.32	5.52	2.06	0.66	3.82
	Difference	-0.7%	+3.9%	+0.6%	-0.4%	+0.3%	+1.1%	+2%	-0.1%
AGV-1	XRF	4.36(5)	1.51(2)	16.90(9)	59.6(2)	2.93(2)	4.97(2)	1.03(1)	6.03(1)
	Preferred Values	4.32	1.53	16.92	59.10	2.92	4.98	1.05	6.04
	Difference	+0.9%	-1.5%	-0.1%	+0.8%	+0.3%	-0.3%	-2%	+0.6%

(continued)

Table II (continued)

Sample	Source	Na_2O	MgO	Al_2O_3	SiO_2	K_2O	CaO	TiO_2	FeO
PCC-1	XRF	0.02(5)	43.42(8)	0.67(9)	41.2(2)	0.007(17)	0.54(2)	0.01(1)	7.42(1)
	Preferred Values	0.0077	43.26	0.72	41.84	0.0031	0.54	0.01	7.34
	Difference	—	+0.4%	-6.7%	-1.5%	—	0	0	-1.4%
DTS-1	XRF	0.007(5)	49.68(8)	0.41(9)	40.2(2)	0.009(17)	0.12(2)	0.01(1)	7.73(1)
	Preferred Values	0.0084	49.83	0.30	40.48	0.0015	0.03	0.01	7.79
	Difference	—	-0.3%	+37%	-0.5%	—	—	0	-0.8%
BCR-1	XRF	3.30(5)	3.52(2)	13.42(9)	55.0(2)	1.68(2)	7.02(2)	2.20(1)	12.06(1)
	Preferred Values	3.32	3.46	13.44	54.22	1.70	7.00	2.22	12.08
	Difference	-0.7%	+1.9%	-0.2%	+1.5%	-1%	+0.2%	-2%	+1.4%

FIGURE CAPTIONS

Fig. 1. A schematic sketch of the spectrometer.

Fig. 2. A cross sectional sketch of the rotating anode mounting.

Fig. 3. A cross sectional sketch of the electron gun and rotating anode mount.

Fig. 4. A cross sectional sketch of the spectrometer vacuum chamber.

Fig. 5. Spectra of 10:1 $LiBO_2$ to Granite Rock Fusion Samples. Numbers in upper left-hand corners are counts full scale per channel.

Fig. 6. Spectra of Pressed Protein Powder, Pressed Freeze-Dried Blood, and Granite Rock Powder on Tape. Numbers in upper left-hand corners are counts full scale per channel.

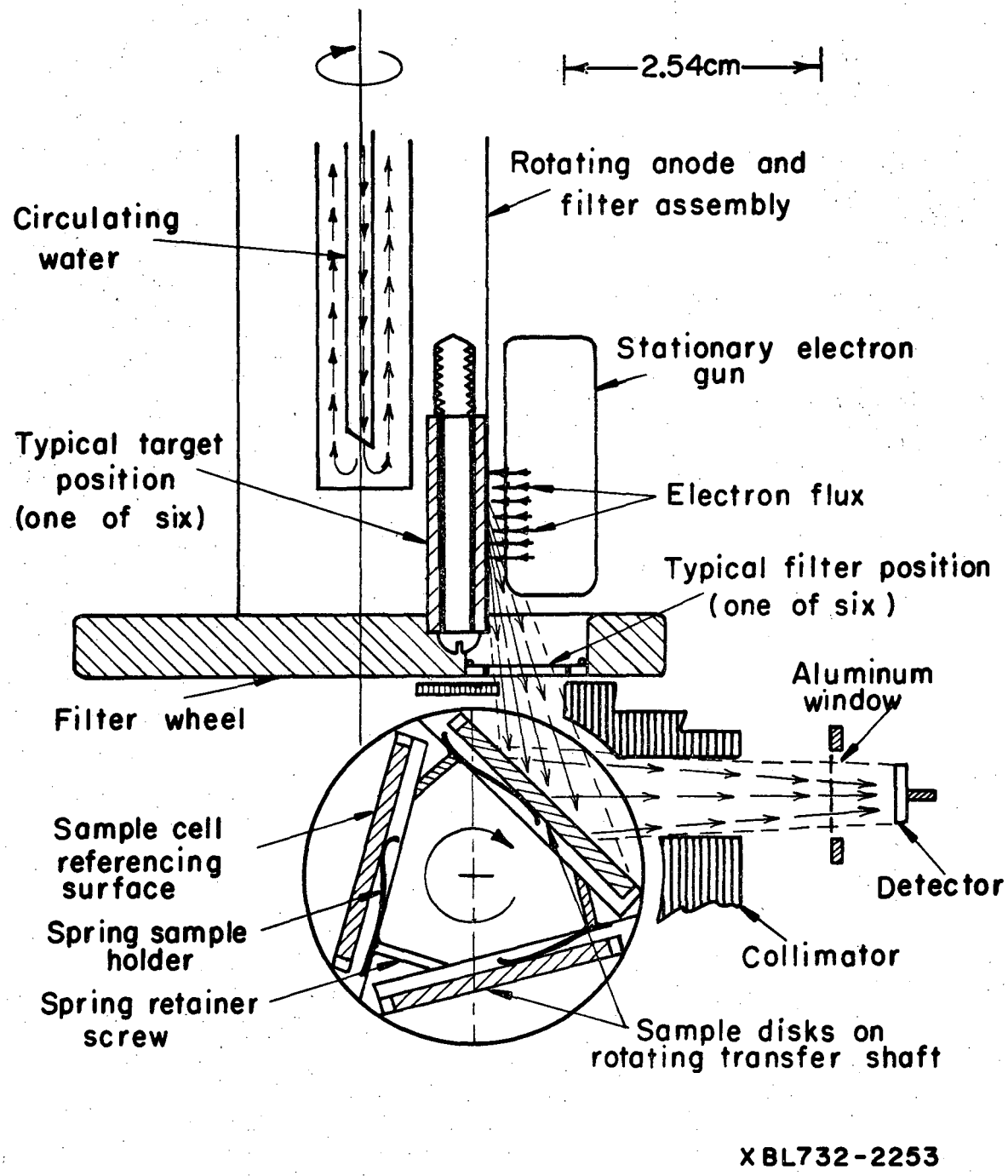
2.54cm
Rotating anode and filter assembly
Circulating water
Stationary electron gun
Typical target position (one of six)
Electron flux
Typical filter position (one of six)
Aluminum window
Filter wheel
Sample cell referencing surface
Spring sample holder
Spring retainer screw
Detector
Collimator
Sample disks on rotating transfer shaft
XBL732-2253

Fig. 1

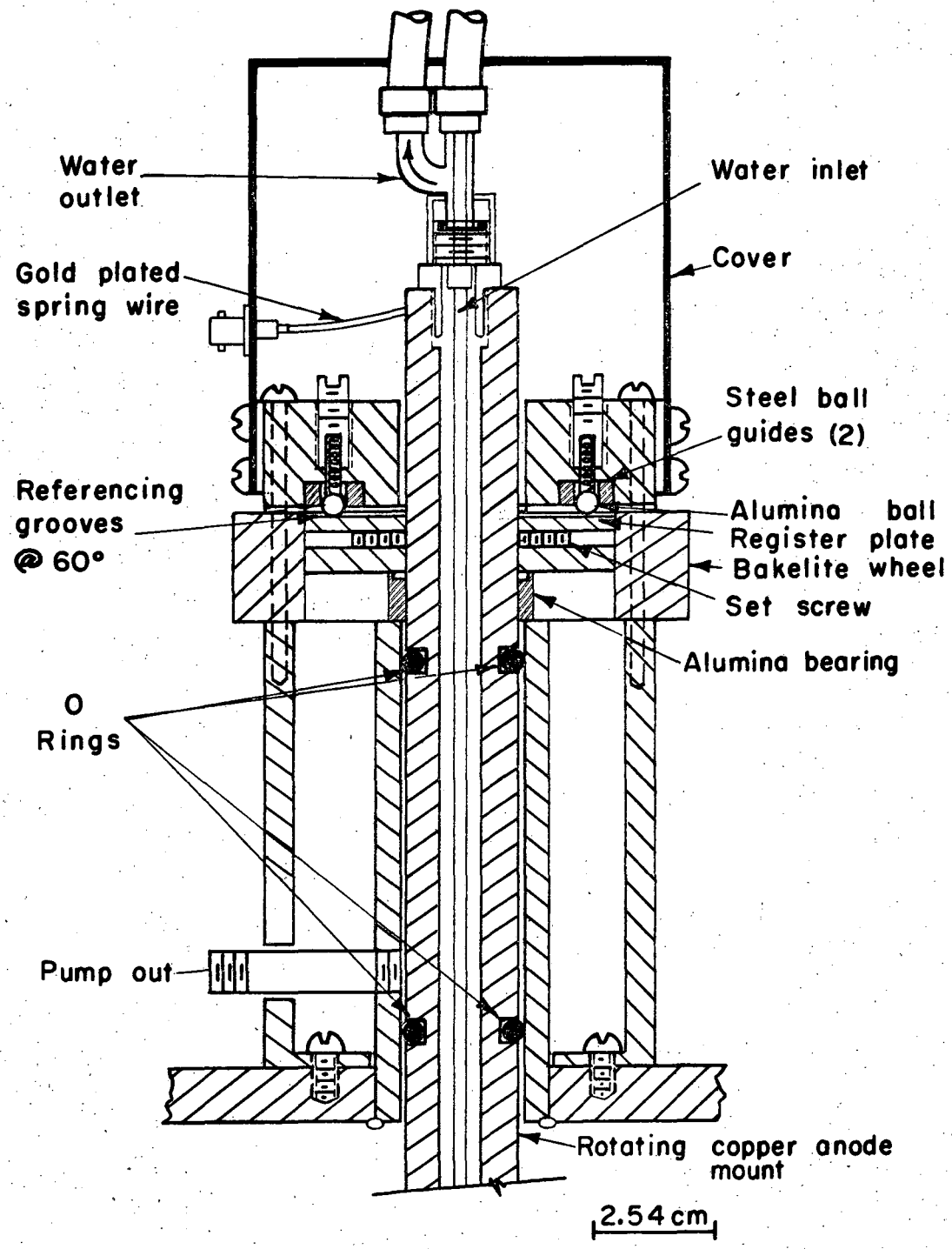

XBL732-2254

Fig. 2

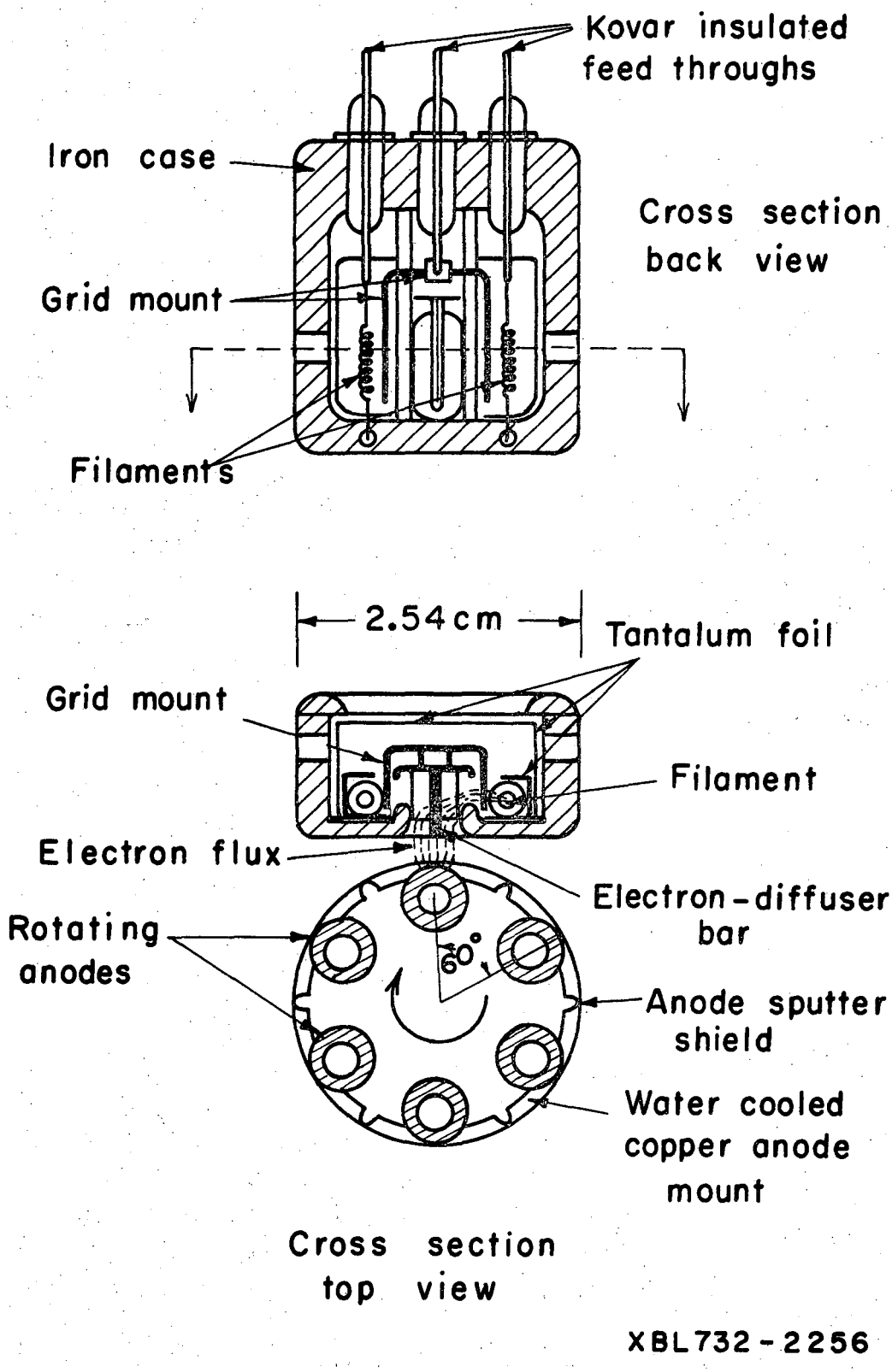
Kovar insulated feed throughs
Iron case
Cross section back view
Grid mount
Filaments
2.54 cm
Tantalum foil
Grid mount
Filament
Electron flux
Electron-diffuser bar
Rotating anodes
60°
Anode sputter shield
Water cooled copper anode mount
Cross section top view
XBL732-2256

Fig. 3

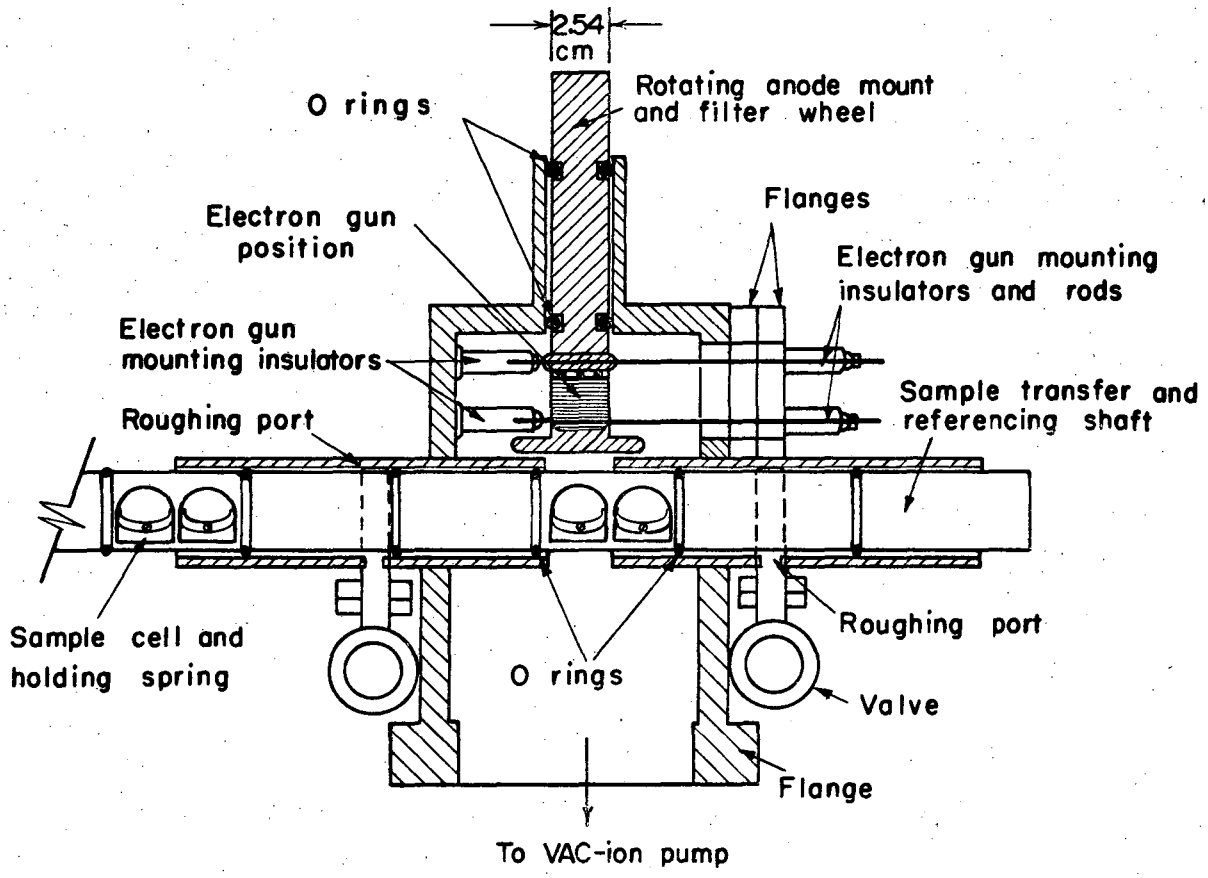

XBL732 - 2255

Fig. 4

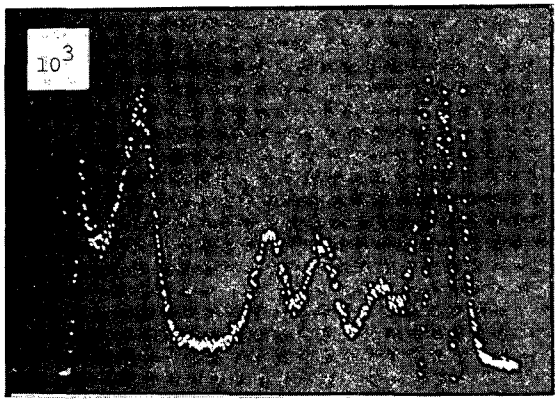

O(530eV) Na Mg Al Si 2keV

Magnesium Anode 10 min.

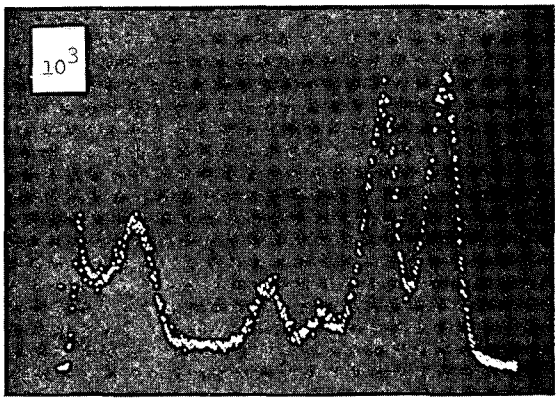

O Na Mg Al Si 2keV

Aluminum Anode 10 min.

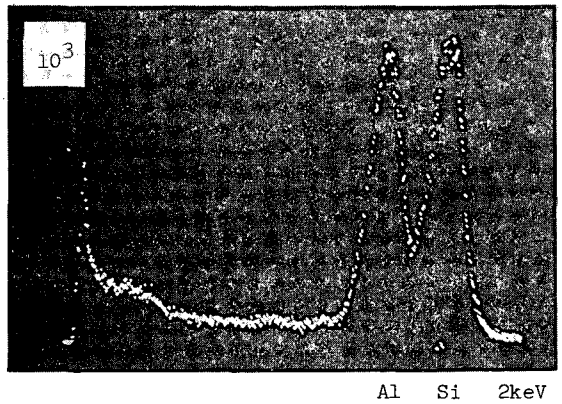

Al Si 2keV

Silicon Anode 4 min.

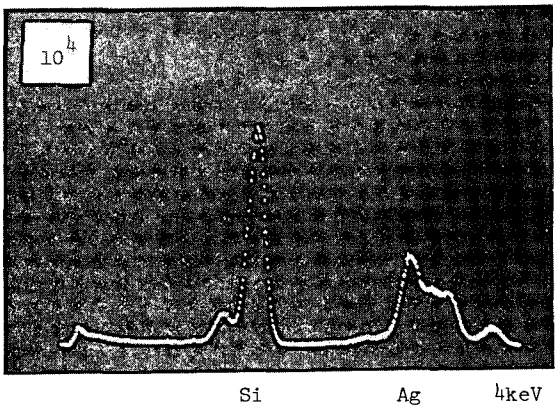

Si Ag 4keV

Silver Anode 2 min.

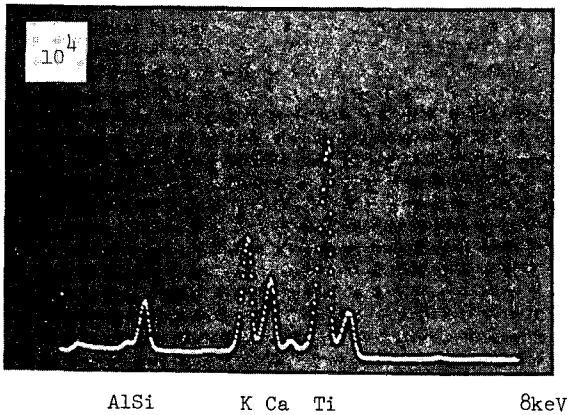

AlSi K Ca Ti 8keV

Titanium Anode 2 min.

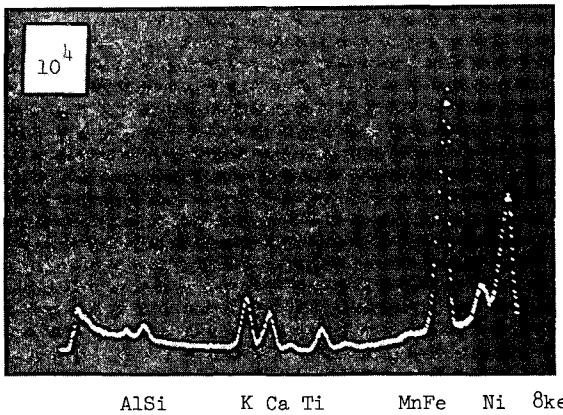

AlSi K Ca Ti MnFe Ni 8keV

Nickel Anode 2 min.

XBB 732-751

Fig. 5

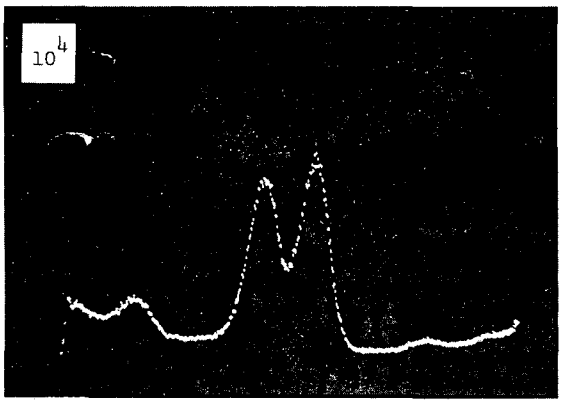

O(530eV) Na Mg 2keV

Protein
Magnesium Anode 10 min.

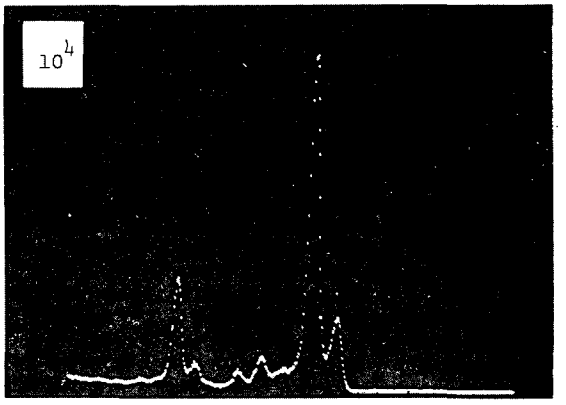

SiPS Cl K Ca Ti 8keV

Protein
Titanium Anode 2 min.

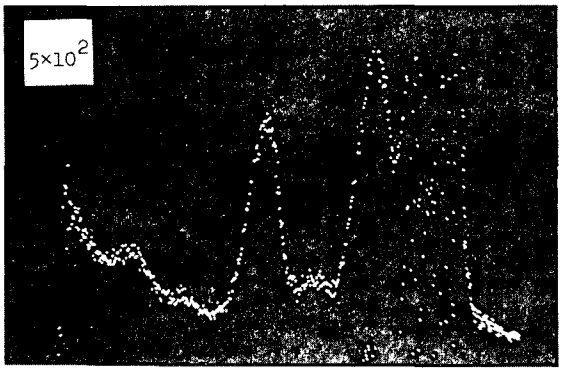

O Na Mg Al Si 2keV

Rock Powder
Magnesium Anode 10 min.

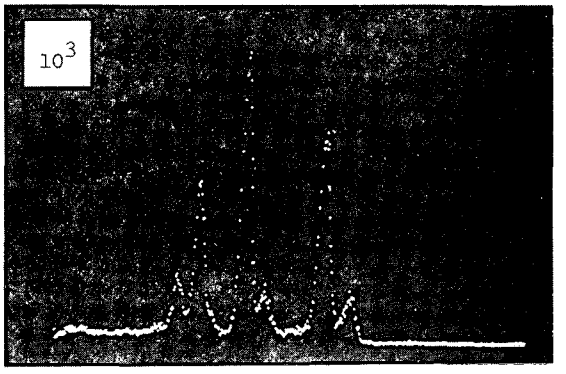

P S Cl K Ti 8keV

Freeze Dried Blood
Titanium Anode 1 min.

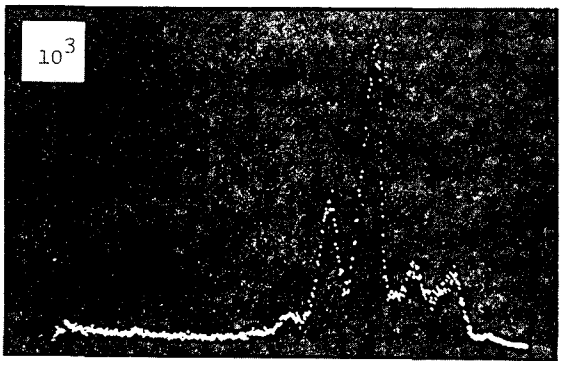

P S Cl Ag K 4keV

Freeze Dried Blood
Silver Anode 1 min.

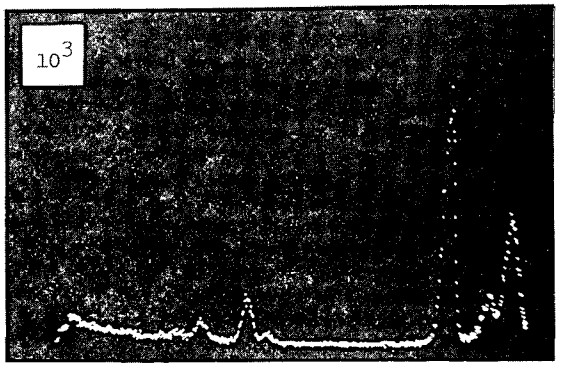

SiPS Cl K Ca Ti Fe Ni 8keV

Freeze Dried Blood
Nickel Anode 1 min.

XBB 732-750

Fig. 6

LEGAL NOTICE

This report was prepared as an account of work sponsored by the United States Government. Neither the United States nor the United States Atomic Energy Commission, nor any of their employees, nor any of their contractors, subcontractors, or their employees, makes any warranty, express or implied, or assumes any legal liability or responsibility for the accuracy, completeness or usefulness of any information, apparatus, product or process disclosed, or represents that its use would not infringe privately owned rights.

TECHNICAL INFORMATION DIVISION
LAWRENCE BERKELEY LABORATORY
UNIVERSITY OF CALIFORNIA
BERKELEY, CALIFORNIA 94720