LBL-16222 c.2

Lawrence Berkeley Laboratory

UNIVERSITY OF CALIFORNIA

Accelerator & Fusion Research Division

RECEIVED
LAWRENCE
BERKELEY LABORATORY

JUL 21 1983

LIBRARY AND
DOCUMENTS SECTION

To be presented at the 7th Symposium (1983 International) on Ion Sources and Ion Assisted Technology (ISIAT '83) and the 4th International Conference on Ion and Plasma Assisted Techniques (IPAT '83), Kyoto, Japan, September 12-16, 1983

NEGATIVE ION SOURCES FOR NEUTRAL BEAM SYSTEMS

K.W. Ehlers

June 1983

TWO-WEEK LOAN COPY

This is a Library Circulating Copy which may be borrowed for two weeks. For a personal retention copy, call Tech. Info. Division, Ext. 6782.

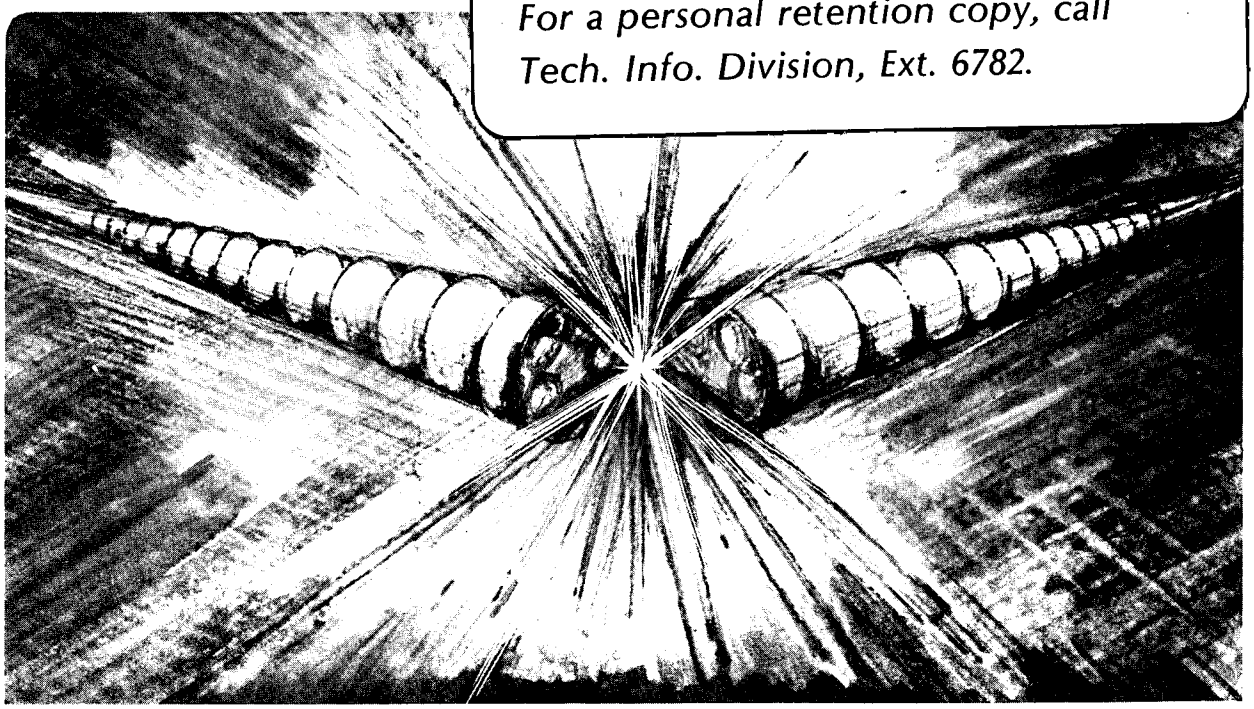

Prepared for the U.S. Department of Energy under Contract DE-AC03-76SF00098

LBL-16222 c.2

DISCLAIMER

This document was prepared as an account of work sponsored by the United States Government. While this document is believed to contain correct information, neither the United States Government nor any agency thereof, nor the Regents of the University of California, nor any of their employees, makes any warranty, express or implied, or assumes any legal responsibility for the accuracy, completeness, or usefulness of any information, apparatus, product, or process disclosed, or represents that its use would not infringe privately owned rights. Reference herein to any specific commercial product, process, or service by its trade name, trademark, manufacturer, or otherwise, does not necessarily constitute or imply its endorsement, recommendation, or favoring by the United States Government or any agency thereof, or the Regents of the University of California. The views and opinions of authors expressed herein do not necessarily state or reflect those of the United States Government or any agency thereof or the Regents of the University of California.

NEGATIVE ION SOURCES FOR NEUTRAL BEAM SYSTEMS

Kenneth W. Ehlers

Lawrence Berkeley Laboratory
University of California
Berkeley, CA 94720

1. Introduction

The plasma parameters needed to provide a controlled fusion reaction are difficult to attain. The plasma must satisfy the Lawson criterion, [1] namely the product of the ion density times the confinement time must be greater than $10^{14}/cm^3$. Then in addition, the ions in the plasma must be extremely hot. For a D-T plasma, ion temperatures must exceed about 10^8C. Only in the past decade have temperatures of this magnitude been obtained in magnetically confined fusion experiments, and this was accomplished by injecting large beams of energetic neutral atoms into the plasma. Neutral atoms are required as they can penetrate the magnetic fields needed to confine fusion plasmas. To date, these neutral beams have been obtained by accelerating large currents of positive deuterium ions which are then converted to neutrals by passing through a deuterium filled gas cell. The neutralization efficiency is a function of ion energy and for the D^+ ion, this charge exchange process peaks at ≈20 keV, and then decreases steadily as the ion energy is increased. As shown in Fig. 1, the practicality of the process begins to fail as the ion energy exceeds about 150 keV.

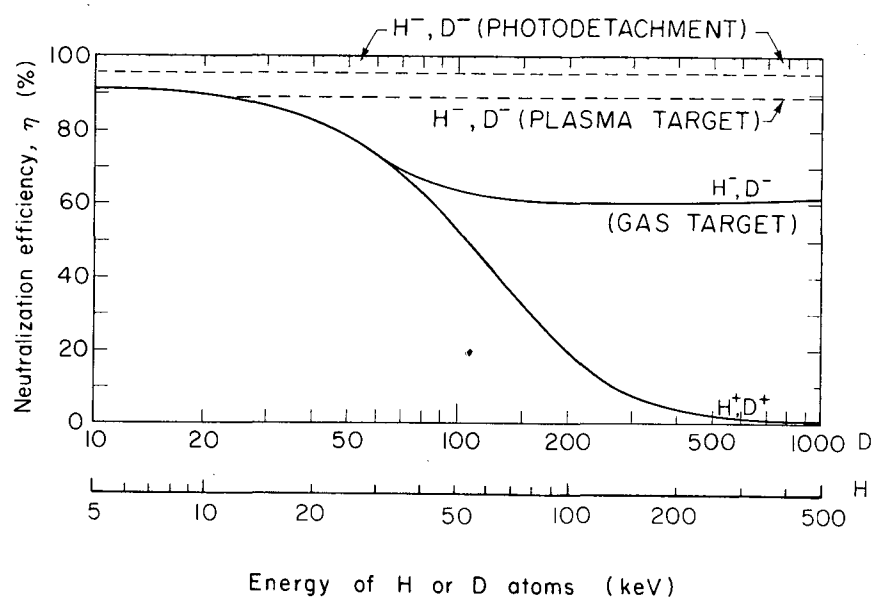

Fig. 1 Neutral beam efficiency versus energy

However for a number of reasons, designers of the next generation of fusion experiments have determined that neutral beam energies considerably in excess of 150 keV will be required. [2] Fortunately, as shown in Fig. 1, there is an alternate approach; accelerate negatively charged hydrogen or deuterium ions. By using D^-, a gas cell can raise the conversion to neutrals at 150 keV from about 30% to 60%, and this efficiency does not decrease even at higher ion energies. The use of a high density plasma has been shown to convert nearly 85% of a 500 keV H^- ion beam into neutrals. [3]

A third process, [4] namely the laser neutralizer,is particularly appealing as in principal it would permit neutralization effiencies close to 100%. In addition, the photon energy can be chosen so as to not produce D^+ ions nor to neutralize heavy mass impurity ions as these have higher electron attachment energies. A laser neutralizer would also eliminate the need to introduce gas near the entrance to the fusion plasma.

Because of the probable need for higher neutral beam energies, fusion laboratories throughout the world have started programs to develop negative-ion-based neutral beam systems. The first problem of course, is to generate the large currents of D^- ions that will be needed. In general, the goals are to generate and accelerate continuous, multi-ampere beams of contaminant-free hydrogen and deuterium ions. These are sizable goals in that only a few years ago a few milliampere beam of H^- was quite impressive.

There are three main methods now used to produce negative hydrogen ions: charge exchange, volume production, and surface production, and this paper will briefly describe these three systems.

2. Charge Exchange Method

In this method, focused beams of fast positive hydrogen ions are changed into a beam of negative ions by passing the beam through a gas or vapor cell. The initial part of the system is similar to the present positive-ion neutral beam systems. except the gas cell is altered to maximize a double-charge exchange reaction, which adds two electrons to the incoming positive ion. With hydrogen in the cell, about 2% of incoming 10 keV H^+ ions would be converted into negative ions. This reaction is velocity dependent, thus a D^+ ion would require 20 keV to reach the same velocity. The required line density for most neutralizer or charge-exchange cells is the order of $2 \times 10^{15}/cm^2$, where line density is the product of gas density in molecules per cm^3 times the length of the cell.

Fig. 2 shows the conversion efficiency for a number of other elements. A vapor of cesium or strontium, for instance, can yield conversion efficiencies (F_-^∞) of 30% to 50%. There is a price to pay,

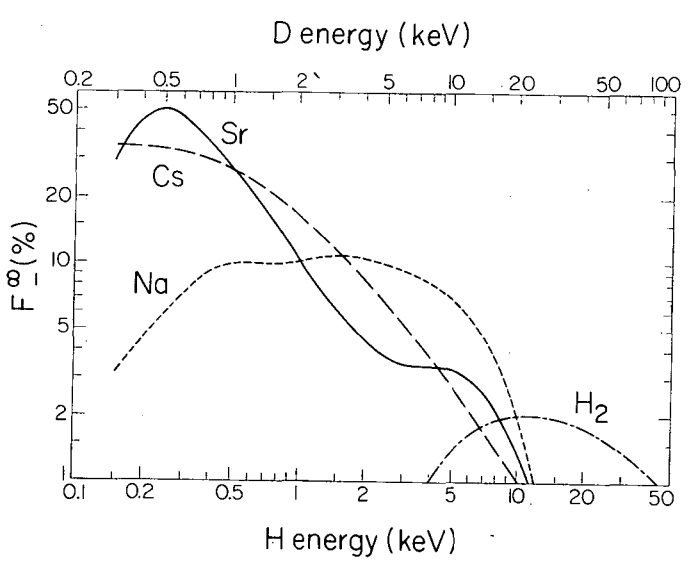

Fig. 2 Equilibrium fraction (F_-^∞) of H^- and D^+ versus energy for hydrogen, sodium, cesium, and strontium.

however: for materials that produce a high F_-^∞, the peak occurs at a much reduced ion energy. The maximum for strontium, for example, is only 500 eV for D^+ ions, (250 eV for H^+) and at this reduced potential, the extraction of reasonable ion current densities as well as ion scattering become difficult problems.

The first use of the double-charge exchange process for forming H^- ion beams for accelerators occurred about 1950, as these ions were needed to utilize the "Swindletron" method of ion acceleration proposed by Alvarez. [5] Negative ions, accelerated from ground, were converted to positive ions by passing through a thin foil mounted in the positive high-voltage terminal. These ions then reaccelerated back to ground, resulting in a final energy of twice the power supply potential. At that time, only small currents of H^-ions ($\approx$.02μA) had been extracted from a plasma, and the double-charge exchange process was employed in order to obtain larger currents as well as to reduce the problem of extracting large currents of electrons.

These early sources [6] which used hydrogen gas in the conversion cell, were rich in molecular positive ions; if these ions were extracted at voltages near 20 keV, higher H^- currents were obtained. The extracted molecular ions were dissociated in the cell, resulting in two atoms or ions traveling near the optimum velocity to charge exchange to H^-. These sources produced H^- beams of 10 to 30μA. In 1964, a single-aperture source that achieved nearly 1 mA of H^- was developed for use with tandem Van de Graaffs. [7] This source had a large H_3^+ content and thus positive ions were accelerated into the conversion cell at three times the optimum potential shown in Fig. 2.

To generate the large H^- currents needed for fusion research, two developments were required. The first was the introduction of large area plasma sources which produced multi-ampere currents of positive ions extracted from many apertures, and the second was the realization that much higher conversion efficiencies were available by using cesium vapor in the conversion cell. Using these techniques, Osher et al [8] obtained a D^- beam of 50 mA with a mean density of several mA/cm^2. This was extended to $\approx$300 mA by Hooper et al [9], who in turn accelerated about 100 mA of this pulsed beam to 60 keV.

Today, only Geller et al [10] in Grenoble, France, use double-charge exchange in cesium to generate D^- ions for neutral beams. This program uses a gas efficient ECR source to generate positive ions, and because the source requires a magnetic field ($\approx$4 kG) the field must be extended to include the accelerator, the cesium vapor cell, and the stripper neutralizer. In the most recent results, 80 mA of D^- were observed at the exit of the cesium cell, with 30 mA accelerated to 30 keV in 4-second pulses.

The work with cesium, while demonstrating that good conversion efficiencies can be realized, has also demonstrated that it is very difficult to obtain good beam optics with the very low energy ions needed to obtain this efficient conversion. Attention thus turned to the conversion of large area beams by means of charge exchange in sodium. The maximum conversion efficiency with sodium is less, but the cross-section remains relatively high up to about 10 keV for deuterium (see Fig. 2). This permits operation at energies where ion acceleration problems are less, and where angular scattering of the beam in the charge exchange cell can be reduced.

In 1977, Semashko et al. [11], using a sodium vapor conversion cell, obtained pulsed H^- beam currents of 1.4A, with a peak current density of several mA/cm^2. The unexpectedly high conversion efficiency of 18% with

hydrogen at 10 keV was credited to the conversion of diatomic and triatomic positive ions. The beam was further accelerated to 40 keV, resulting in the coacceleration of about twice as many electrons as negative ions. Although this work is continuing, results of the past several years are not known.

In 1980, Hooper et al. [12] used sodium to obtain a 2.2A pulsed beam of D^- with a current density of about 12 mA/cm^2. The conversion efficiency at 10.5 keV was about 8.5% or close to the predicted value.

In summary, the double-charge-exchange method can produce multi-amperes of H^- and D^- ions. The ion current densities are not high thus large area positive ion beams are required, and this allows the use of large-area ion sources as well as the experience gained in the positive-ion neutral beam program. The method also has disadvantages: the method requires low energy positive ions which increases beam optics problems as well as ion scattering in the conversion cell. The large scale experiments to date have not fully solved the electron problem as electrons exist at the exit from the charge exchange cell, and a practical method of eliminating the co-acceleration of electrons at this point has not been demonstrated.

3. Volume Production

The fundamental processes that can destroy H^- ions in a plasma environment exceed those of known processes that can create these ions by 10^4. [13] Thus it would seem unlikely that negative ions could be directly extracted from a plasma. Experiments have shown, however, that more ions are available from this process than theory would imply. Experimenters in France have shown that under certain conditions, more than 20% of the ions in the central portion of a hydrogen discharge may be negative. [14] These results have not been extended to high density conditions, nor has it been shown that this high population of negative ions can be extracted. Nevertheless, these results indicate that yet unknown formation processes may exist. [15]

In 1965, I developed a modified Penning-type ion source to generate H^- ions for cyclotrons [16], and this source is shown in Fig. 3.

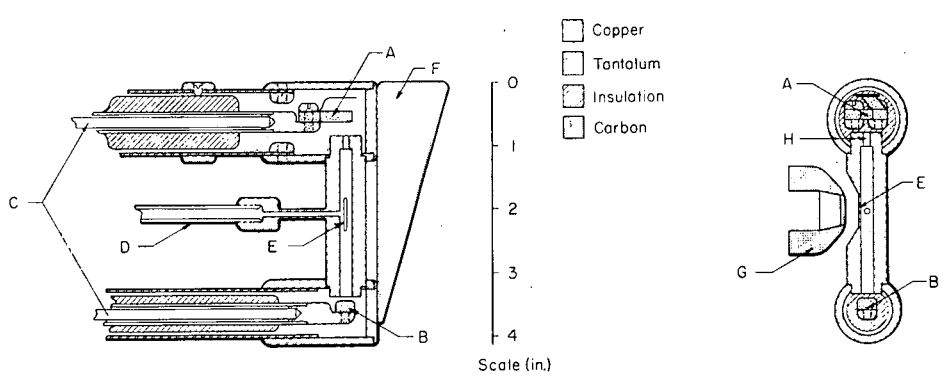

Fig. 3 Cross-sectional drawing of a modified Penning H^- ion source

A= heated filament cathode
B= cold reflector cathode
C= water cooled squirt tubes
D= gas feed line
E= ion exit slit
F= trochoidal electron dump block
G= ion-extraction electrode
H= arc-defining hole

Continuous H^- currents in excess of 5 mA could be extracted from this source with an emission current density of 40 mA/cm^2, and this geometry is in use today with a number of isochronous cyclotrons and tandom accelerators. The extractable ion current increased sizably with increased

source pressure, as shown in Fig. 4.

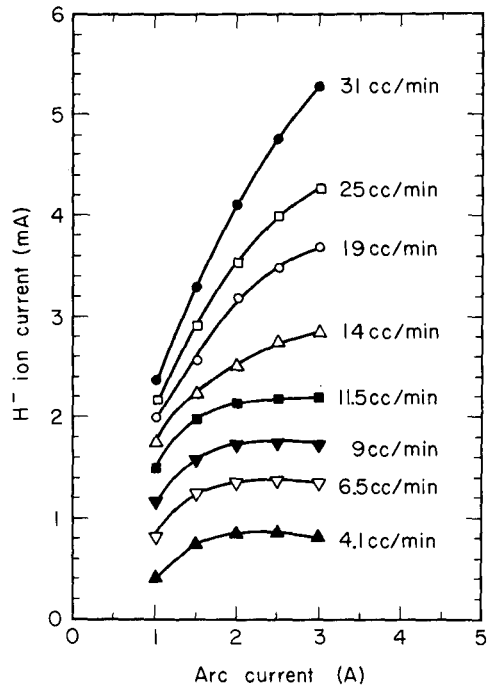

Fig. 4 H^- ion current vs. gas flow rate

Electrons, of a magnitude much less than expected, were also extracted, but because the extraction was E X B, the electrons did not reach the extractor. Instead, they migrated in small trochoids to where they could be intercepted by aligning part of the electric field with the magnetic field. The main source modification was to relieve the discharge column so that molecular gas could surround the discharge-plasma column. This action was designed to amplify formation mechanisms that involve molecular hydrogen.

In 1972 in Russia, Belchenko, Dimov, and Dudnikov introduced a magnetron-type plasma source. [17] H^- ions were extracted from the E x B produced plasma from a slit in the anode elongated perpendicularly to the magnetic field. H^- ion currents up to 22 mA, with the exceedingly high ion current density of 220 mA/cm^2 were extracted. Because of the small size and the very high arc power required, these results were available only for short pulse lengths of a few milliseconds. This source, shown in Fig. 5, also incorporated a relief between the plasma and the body of the source.

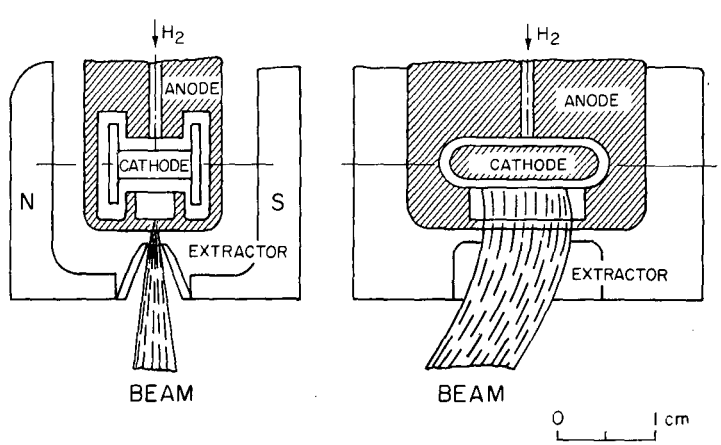

Fig. 5 Magnetron negative hydrogen ion source

Even though the source pressure was quite high (0.2 Torr) the extracted ion current substantially exceeded that predicted by theory.

If indeed the negative ion concentration in existing large-area plasma sources, when operated with a reasonable arc power and reduced source pressure, is higher than expected, these sources could be considered as candidates to produce the large negative ion currents required. Direct extraction of H^- and D^- ions from such sources would not require the need for cesium or other low-work function alkali metals, which may be important for systems which are required to maintain very high ion acceleration potentials. The big problem of course, is that one must find some method to remove, or sizably decrease the large current of electrons which would accompany the negative ion beam.

A recent development termed the "magnetic filter" [18] has shown promise toward meeting this objective. Fig. 6 (a) is a diagram of a small multi-line cusp plasma source of the type used for large area extraction of positive ions. Under normal operating conditions, the plasma potential in such a geometry is several volts positive in respect to the wall anode. The beam-forming electrode floats negative relative to anode thus postive ions are free to drift to this electrode. Any negative ions however, are trapped electrostatically within the plasma volume as there is no electrode for them to be lost to. Although this trapping could account for the unexpectedly large percentage of H^- ions observed in such discharges [19], it would also make it exceedingly difficult to extract these ions from the discharge. So, to extract negative ions from the source, the floating beam forming electrode must at least be connected to anode potential.

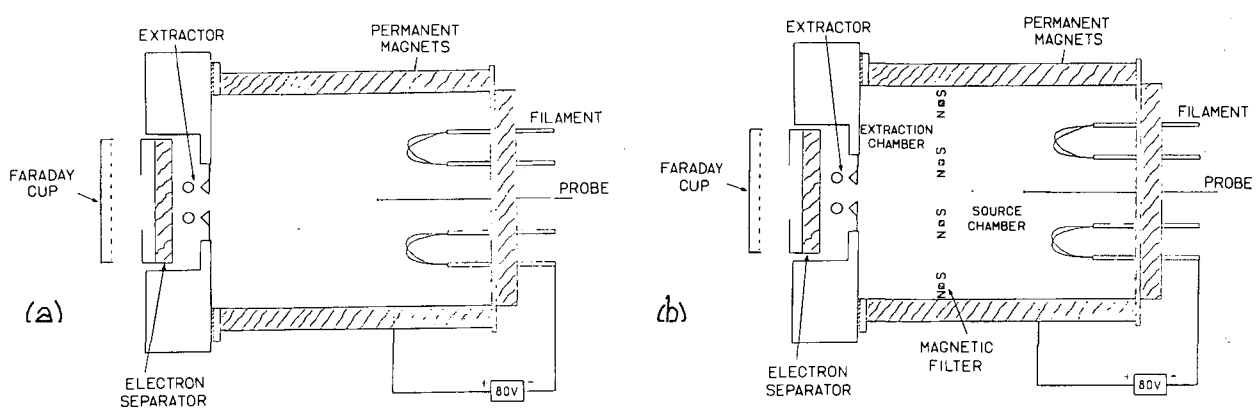

Fig. 6 (a) Multi-line cusp plasma source geometry
(b) Source modified to include a magnetic filter

When this was done, as shown in Fig. 7, a small H^- current could be extracted, but it was of course, accompanied by a large electron current, ≈9000 times the H^- current, and about 100 times as large as the positive ion current that was extracted.

The addition of a magnetic filter is shown in Fig 6(b). It consists of rows of tailored permanent magnets mounted inside the source chamber, with their housing connected to source anode. The filter magnetic fields are made strong enough to prevent primary electrons from leaving the source discharge chamber. Positive ions however, can penetrate the filter fields and the interesting feature of this filter geometry is that the electrons which accompany thses ions are very cold. These cold electrons are unable to generate additional positive ions in the region of ion extraction. The use of

this filter geometry for positive ion sources has been investigated [20] to improve the plasma density profile and to increase the atomic component of the extracted positive ion beam.

The magnetic filter geometry inherently reduces the positive ion and electron current density in the extraction chamber and this effect can be enhanced by applying a positive voltage to the beam-forming electrode. The effect of this bias is to raise the potential of the plasma in the extraction region relative to the plasma potential in the discharge chamber, and the result is to open the door for the flow of negative ions into the extraction chamber.

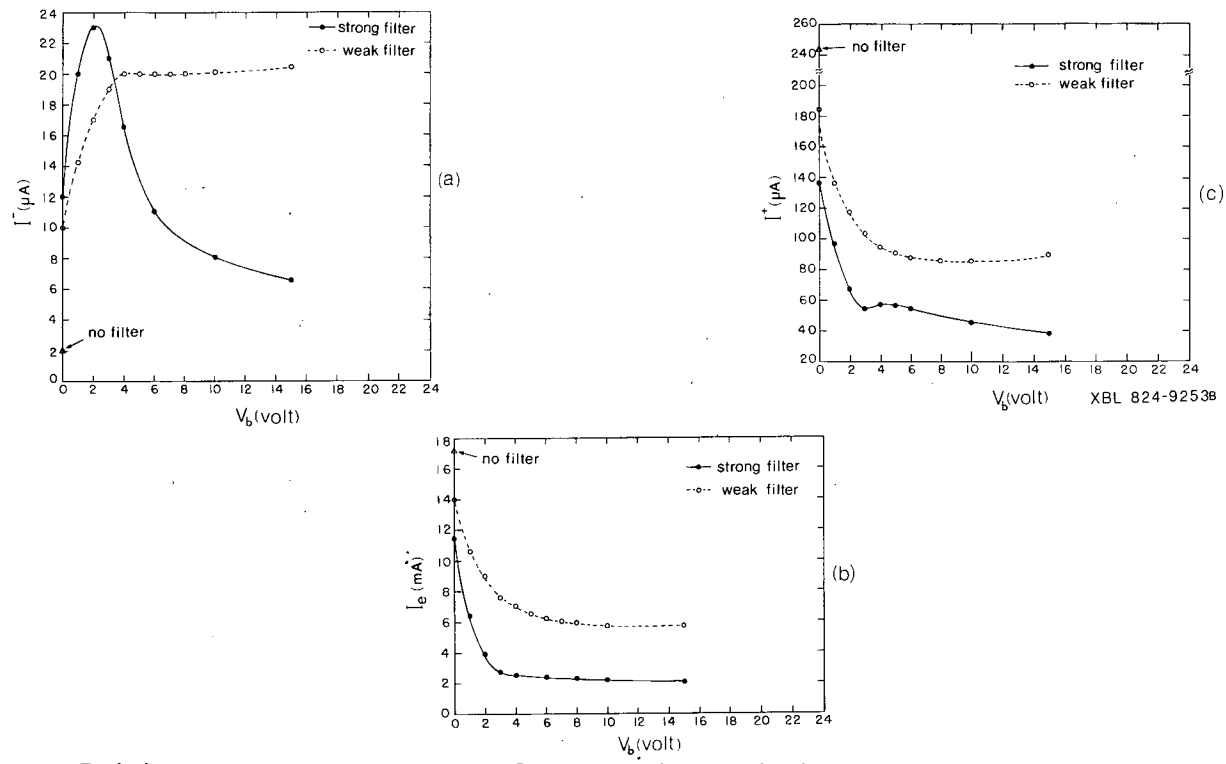

Fig. 7 (a) H^- current vs. beam-forming electrode bias
7 (b) Extracted electron current vs. beam-forming electrode bias
7 (c) Extracted positive ion current vs. beam-forming electrode bias

That this indeed happens is shown in Fig. 7. The use of a weak filter and a positive bias produces a factor of 10 increase in the H^- current (Fig. 7a) plus a factor of 3 decrease in the number of electrons extracted (Fig. 7b). The use of a stronger filter results in a slight increase of H^- at the proper bias plus an additional factor of 2 decrease in electrons extracted. The net improvement from using the filter in this test is nearly two orders of magnitude with an I_{e^-}/I_{H^-} ratio of 100. This ratio is still too high but a big step in the right direction, and further refinement and innovation may yet solve this problem.

If it can be shown in the near future that adequate H^- and D^- ion current densities can be obtained from existing large-area type plasma sources when operated with reasonable arc power and source pressure, these sources will receive active consideration for negative ion beam lines.

4. Surface Production

In 1973, workers in Russia added cesium to the discharge of a small magnetron source quite similar to that shown in Fig. 5, and the H^- output was increased from 5 mA to 20 mA [21]. Further refinements to the geometry resulted in milli-second pulses of nearly 200 mA, and with the very small

extraction slits employed, the resulting current density was greater than $3A/cm^2$. Studies of the energy spectra of the resulting H^- ions have determined the approximate surface-plasma mechanisms which produce these intense H^- ion beams when cesium is admitted. [22, 23]. The cathode of the discharge is bombarded by fast ions of hydrogen and cesium. Reflection of the hydrogen ions and sputtering of adsorbed hydrogen from the cathode surface results in hydrogen atoms leaving the cathode surface with some finite energy. If the work function of the surface is reduced, some of these atoms can capture an electron from the surface, and if their departure is fast enough to escape the image forces of the surface barrier, they will maintain the additional electron in the n=1 shell and and escape as a negative ion. The required exit velocity for H^- survival is not fully determined but is believed to be $\approx$5 eV. [24]. The low work function of the cathode surface is provided by a partial monolayer of adsorbed cesium, and for reasons not yet understood, molybdenum seems to be the best substrate.[25]

By 1974, short pulses of nearly 1 ampere at 3 A/cm^2 current density had been obtained from larger sources at Novosibirsk and their operation confirmed at Brookhaven. [26] Since then, a variety of similar source geometries, such as the "planotron" and others with multiple apertures have been tested in Russia. The "planotron" geometry confines the discharge to the cathode surface which faces the extraction apertures only, and this considerably improves the source power efficiency. [27] In 1979, Fermilab converted its large accelerator to operate with H^- ions generated by a surface-production source similar to that shown in Fig. 5. [28]

In 1979, we began a program in Berkeley to develop a surface-production H^- source that would meet the difficult neutral beam requirements. The goal was to develop a source that could generate a continuous, self-extracted H^- ion current of 1A or better, and to accelerate this beam to $\approx$40 keV. Because of ion optics considerations, we did not desire a high ion current density; thus to obtain multi-ampere beams, a large exit aperture would be needed, and this in turn would require that the source operating pressure be low.

Fig. 8 shows the source geometry, a multi-line cusp, with rows of permanent magnets placed on all sides of the well cooled anode chamber wall. Eight tungsten filaments are the cathodes for the discharge which operates well at 1 milli-Torr or less at 80 V and arc currents of about 100 A.

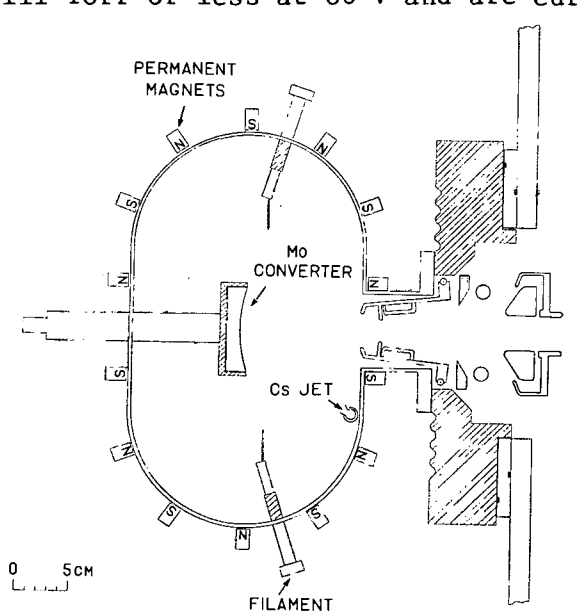

Fig. 8 Schematic diagram of the LBL self-extraction negative ion source.

To produce negative ions, a water-cooled concave molybdenum converter (8 cm high and 25 cm long) is inserted into the plasma through two feedthrough insulators. By biasing the converter negatively (≈200 V) with repect to the plasma, positive ions from the plasma are accelerated across the sheath to strike the converter surface. Negative ions formed at the converter surface are then accelerated back through the sheath by the same potential, and the bias on the converter thus becomes the ion extraction potential. The converter surface is curved to geometrically direct the negative ions through the plasma to the exit aperture. The B field in this region is tailored to be strong enough to reflect all energetic primary electrons yet weak enough to produce only a small lateral displacement of the trajectories of the energetic self-extracted H^- or D^- ions. The electrode defining the exit aperture is electrically isolated so that a small positive bias can be applied, which is essential for complete electron suppression. [29] Cesium vapor is introduced into the system from an external oven through an ohmically heated coaxial tube located below the exit aperture.

After emerging from the source exit aperture, the ions are accelerated to higher energies by the four electrode accelerator shown in Fig. 8. The results to date have been encouraging. With the discharge operating at 80 volts and 100 A, and with a hydrogen source pressure of about 8×10^{-4} mm, a continuous self-extracted beam of H^- of 1.1 A has been routinely obtained. The converter electrode, biased at -160 V, draws a total current of about 20 A, and spectrometer signals indicate a high mass impurity of less than 1%. The self-extracted beam has been accelerated to 34 keV for periods of about 7 sec, this time being limited by the thermal capacity of the beam stop. The measured electron component in the beam is directly related to the pressure in the accelerator gap: this indicates that the electrons are produced in the gap by the reaction $H^- + H_2 \rightarrow H + H_2 + e^-$, which has a high cross-section. By utilizing the maximum pumping capacity of the system, I_{e^-}/I_{H^-} was reduced to .038 where the gas efficiency of the source was approximately 13%. [30]

The magnitude of H^- production is very sensitive to the cesium coverage of the converter as well as to the amount of cesium ions in the discharge. It is therefore important to control the recycling of cesium in the source chamber in the presence of a continuously operating discharge. In short-pulsed sources the converter can be covered with cesium atoms during the off-time between pulses. The electrode temperature is then the important parameter as it should be warm enough to insure the desired .7 monolayer coverage of cesium. In a d.c. discharge however, few unionized cesium atoms exist, and it is difficult to maintain the proper coverage as the cesium ions are very effective at sputtering away the cesium coverage.

Little has been said thus far of deuterium operation with surface sources. To avoid the neutron problem, much of the experimental work is done with hydrogen. But, in general, under similar operating conditions, the D^- yield is from ≈2 to $\sqrt{2}$ times less than that of H^- ions. Although the data are limited it seems that about the same production ratio exists for volume produced negative ions.

Work has been underway at Brookhaven National Laboratory to develop a d.c. magnetron source [31], however this work was recently delayed in order to pursue a new method of providing plasma for a surface converter. This method could, in principal, supply a dense plasma at a source pressure much less than that required by the magnetron geometry. This method employs hollow cathodes, mounted in a 200 gauss axial magnetic field to provide a wide, thin, strip plasma. Negative ions are created at a biased converter electrode and self-extracted across the magnetic field. H^- beams in excess of .1 A have been extracted. Ion optics and methods to provide the

desired cesium coverage on the converter are two problems being currently studied.

At Oak Ridge National Laboratory, a Penning source, somewhat similar to the volume-production source shown in Fig. 3 has been used to supply the plasma for a surface converter. A biased molybdenum converter is aligned along the magnetic field lines, and operating with 5 sec pulses, with the converter biased to -150 volts, the source has produced 23 mA of H^- at an extraction density of 56 mA/cm^2. [32] This source incorporates a novel method of intercepting the E X B extracted electrons on a +1.5 kV electrode, thus considerably reducing the power dissipation which results when these electrons are collected at full extraction potential.

Summary

Of the three methods discussed for producing H^- and D^- ions, surface production seems to offer the most promise for obtaining the high currents needed to meet neutral beam requirements. However, future developments in sources employing the other methods will be watched with great interest. It must be recognized that we are still in the early stages of high-current negative ion source development, and many problems remain to be solved. Nevertheless, the record to date is impressive as in just the past 20 years, steady state beams of H^- ions have increased steadily from much less than 1 mA to more than 1 A, an improvement of nearly four orders of magnitude.

Acknowledgements

This work was supported by the Director, Office of Energy Research, Office of Fusion Energy, Development and Technology Division, of the U. S. Department of Energy under Contract No. DE-AC03-76SF00098.

References

1. J. D. Lawson, Proc. Phys. Soc. B 70, 6 (1957)

2. Intor Group, in Rep. Int. Tokamak Reactor Workshop (IAEA, Vienna), 1980

3. A. A. Ivanov and G. V. Roslyakov, Sov. Phys. Tech. Phys. 25 (11), 1346 (1980)

4. M. W. McGeouch, in Proc. of the 2nd Int. Symposium on the Production and Neutralization of Negative Hydrogen Ions and Beams, edited by Th. Sluyters, Brookhaven Nat'l. Lab., 1980, p. 304

5. L. W. Alvarez, Rev. Sci. Instrum. 22, 705, (1951)

6. J. A. Weinman and J. R. Cameron, Rev. Sci. Instrum. 27, (5), 288, (1956)

7. N. B. Brooks, R. H. Rose, A. B. Wittkover, and R. P. Bastide, Nucl. Instrum. Meth. 28, 315 (1964)

8. J. E. Osher, F. J. Gordon, G. W. Hamilton, in Proc. of 2nd Intern. Conf. on Ion Sources, Vienna, Austria, 1972, p.876

9. E. B. Hooper, Jr., O. A. Anderson, T. J. Orzechowski, and P. Poulsen, in Proc. of the Symposium on the Production and Neutralization of Negative Hydrogen Ions and Beams, edited by K. Prelec, Brookhaven Nat'l. Lab., Upton, N.Y., 1977. p.163

10. R. Geller, C. Jacquot, P. Sermet, in Ref. 9, p.173.

11. N. N. Semashko, V. V. Kusnetsov, A. I. Krylov, in Ref. 9, p.170

12. E. B. Hooper, Jr., P. Poulsen, and P. A. Pincosy, Jour. Appl. Phys. 52 (12), 7027 (1981)

13. D. H. Crandall and F. W. Meyers, in Ref. 4, p. 1-9

14. G. W. Hamilton, M. Bacal, A. M. Bruneteau, H. J. Doucet and M. Nachaman, in Ref. 4, p. 90.

15. A. M. Karo. T. M. DeBoni, and J. R. Hiskes, in Ref. 4, p.74

16. K. W. Ehlers, Nucl. Instrum. Methods 32, 309 (1965)

17. Yu. I. Belchenko, G. I. Dimov, and V. G. Dudnikov, Zh, Eksp. Teor. Fiz. 43 1720 (1973).

18. K. N. Leung, K. W. Ehlers, and M. Bacal, Rev. Sci. Instrum. 54 (1) 56 (1983)

19. M. Bacal, E. Nicolopoulou, and H. Doucet, in Ref. 9, p.26.

20. K. W. Ehlers and K. N. Leung, Rev. Sci. Instrum. 52 (10) 1452 (1981)

21. Yu. I. Belchenko, G. I. Dimov and V. G. Dudnikov. Investiya of USSR Academy of Science Ser. Fix. 37, 2573 (1973).

22. Yu. I. Belchenko, G. I. Dimov and V. G. Dudnikov, in Proc. of the 2nd Symposium on Ion Sources and Formation of Ion Beams, Berkeley, Calif., 1974, p.VIII-I-I.

23. K. W. Ehlers and K. N. Leung, Rev. Sci. Instrum. 51 (6), 721 (1980).

24. P. Massman, P. J. V. Bommel, E. H. A. Granneman, H. J. Hopman, J. Los, F. Siebenlist, J. N. M. v. Wunnik, in Proc. of the 10th European Conference on Controlled Fusion and Plasma Physics, Moscow, Vol. 1, 1981, p. H-20.

25. K. N. Leung and K. W. Ehlers, J. Appl. Phys. 52 (6), 3905 (1981).

26. Th. Sluythers, in Ref. 22, p.V-III-2-1.

27. Yu. I. Belchenko, V. G. Dudnikov, Proc. of the 15th Int'l. Conf. on Phenomena in Ionized Gases, Minsk, 1981, part 11, p.1504.

28. C. W. Schmidt, in Ref. 4, p.189

29. K. W. Ehlers and K. N. Leung, Appl. Phys. Lett. 38, 287 (1981).

30. K. N. Leung and K. W. Ehlers, Rev. Sci. Instrum. 53 (6), 803 (1982).

31. K. Prelec, in Ref. 5, p.145

32. W. K. Dagenhart, W. L. Stirling, and J. Kim, Oak Ridge National Laboratory report, ORNL/TM-7895 (1982).

This report was done with support from the Department of Energy. Any conclusions or opinions expressed in this report represent solely those of the author(s) and not necessarily those of The Regents of the University of California, the Lawrence Berkeley Laboratory or the Department of Energy.

Reference to a company or product name does not imply approval or recommendation of the product by the University of California or the U.S. Department of Energy to the exclusion of others that may be suitable.

TECHNICAL INFORMATION DEPARTMENT
LAWRENCE BERKELEY LABORATORY
UNIVERSITY OF CALIFORNIA
BERKELEY, CALIFORNIA 94720