LBL-16304
UC-20b

Lawrence Berkeley Laboratory
UNIVERSITY OF CALIFORNIA

Accelerator & Fusion Research Division

SELF-CORRECTION COIL
OPERATION MECHANISM OF SELF-CORRECTION COIL

K. Hosoyama

June 1983

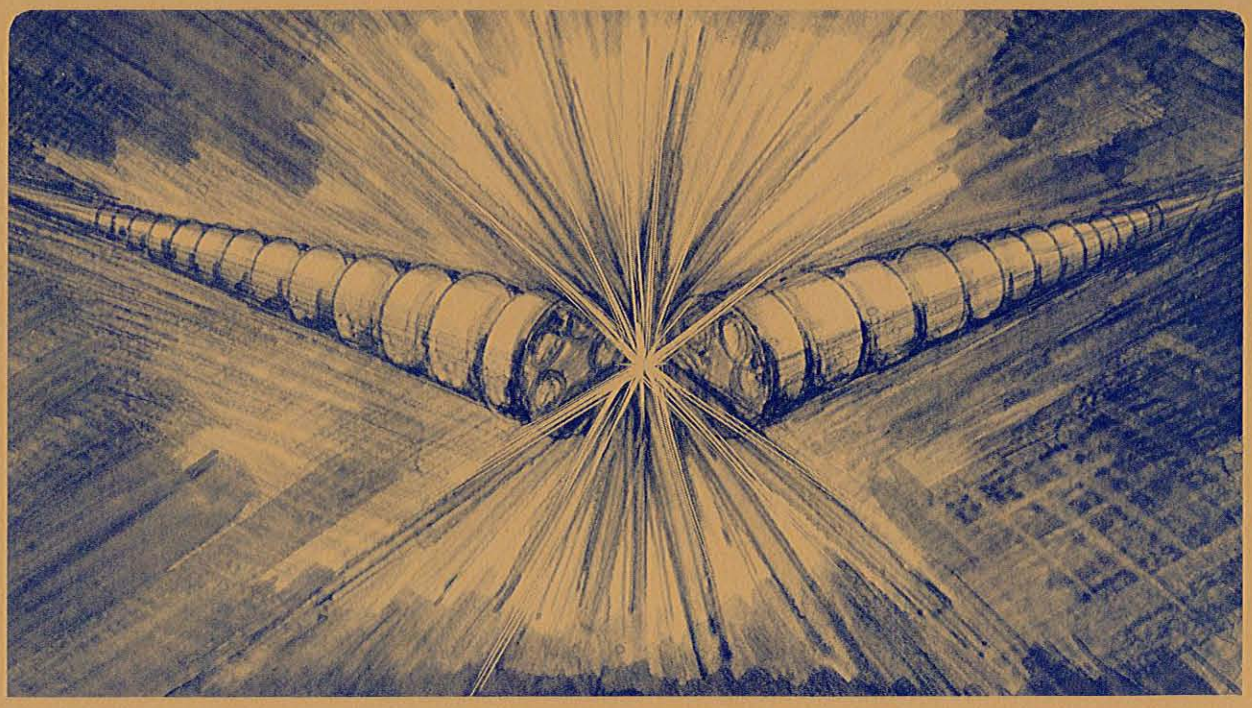

Prepared for the U.S. Department of Energy under Contract DE-AC03-76SF00098

LEGAL NOTICE

This book was prepared as an account of work sponsored by an agency of the United States Government. Neither the United States Government nor any agency thereof, nor any of their employees, makes any warranty, express or implied, or assumes any legal liability or responsibility for the accuracy, completeness, or usefulness of any information, apparatus, product, or process disclosed, or represents that its use would not infringe privately owned rights. Reference herein to any specific commercial product, process, or service by trade name, trademark, manufacturer, or otherwise, does not necessarily constitute or imply its endorsement, recommendation, or favoring by the United States Government or any agency thereof. The views and opinions of authors expressed herein do not necessarily state or reflect those of the United States Government or any agency thereof.

Printed in the United States of America
Available from
National Technical Information Service
U.S. Department of Commerce
5285 Port Royal Road
Springfield, VA 22161
Price Code: A03

Lawrence Berkeley Laboratory is an equal opportunity employer.

LBL-16304
SUMAG-97

SELF-CORRECTION COIL

- OPERATION MECHANISM OF SELF-CORRECTION COIL*-

Kenji Hosoyama†

Lawrence Berkeley Laboratory
University of California
Berkeley, California 94720

June 1983

*This work was supported by the Director, Office of Energy Research, Office of High Energy and Nuclear Physics, High Energy Physics Division, U. S. Dept. of Energy, under Contract No. DE-AC03-76SF00098.

†Present Address: National Laboratory for High Energy Physics, Ibaraki-Ken, Japan.

INTRODUCTION

We discuss here the operation mechanism of self-correction coil with a simple model. At the first stage, for the ideal self-correction coil case we calculate the self-inductance L of self-correction coil, the mutual inductance M between the error field coil and the self-correction coil, and using the model the induced current in the self-correction coil by the external magnetic error field and induced magnetic field by the self-correction coil. And at the second stage, we extend this calculation method to non-ideal self-correction coil case, there we realize that the wire distribution of self-correction coil is important to get the high enough self-correction effect. For measure of completeness of self-correction effect, we introduce the efficiency η of self-correction coil by the ratio of induced magnetic field by the self-correction coil and error field. As for the examples, we calculate L, M and η for two cases; one is single block approximation of self-correction coil winding and the other is two block approximation case. By choosing the adequate angles of self-correction coil winding, we can get about 98% efficiency for single block approximation case and 99.8% for two block approximation case. This means that by using the self-correction coil we can improve the field quality about two orders.

IDEAL SELF-CORRECTION COIL WINDING CASE

For easier uderstanding of the principle of self-correction, we introduce a model for the superconducting magnet with self-correction coil. Of course we can solve this problem without using this kind of model[1),2)], but by using this model we can get the clear image of the situation and this method is very useful for the non-ideal case which will be discussed later.

Figure 1 shows the model for ideal self-correction coil case, where L_0 is the self-inductance of main dipole coil, L_1 is the self-inductance of error coil winding which is originated from incorrect coil position or deformation of coil shape or saturation effect of iron yoke, etc., L_2 is the self-inductance of self-correction coil, M is the mutual-inductance between the error coil and self-correction coil. R_1 is the resistance of main coil circuit, R_2 is the resistance of self-correction coil circuit and I_1, I_2 are the currents in main coil and self-correction coil circuit respectively.

The currents I_1, I_2 are determined by solving the following differential equations,

$$\begin{cases} E = (L_0 + L_1)\dfrac{dI_1}{dt} + I_1 R_1 + M\dfrac{dI_2}{dt} & (1) \\ 0 = L_2\dfrac{dI_2}{dt} + I_2 R_2 + M\dfrac{dI_1}{dt} & (2) \end{cases}$$

In practical case the main coil current I_1 is controlled by current control feedback system, so that the current I_2 is given by solving the equation (2) directly; for simplicity we assume $R_2 = 0$, because the self-correction coil operate under the zero resistance superconducting state and its joint resistance is quite low compared to the self-inductance L_2 (for $R_2 = 10^{-10}\,\Omega$, $L_2 = 10^{-2}$ H, the time constant of this self-correction coil circuit is $\tau = L_2/R_2 = 10^8$ sec), then from equation (2),

$$L_2\frac{dI_2}{dt} = -M\frac{dI_1}{dt} \qquad (3)$$

assuming $I_1 = I_2 = 0$ at $t = 0$, we get the following result,

$$I_2 = -\frac{M}{L_2} I_1 \tag{4}$$

The induced current in the self-correction coil is linear proportional to the current in the error coil winding, that is, to error field.

For the error coil winding, we assume the ideal current sheet coil, which produces the error field. By introducing this error coil, we can calculate the mutual inductance M between the error coil and self-correction coil. This current distribution is expressed following equation,

$$i_1(\theta) = n\ N_1\ I_1 \cos(n\theta) \tag{5}$$

where n is the multi-polarity of error field considered, N_1 is the total turns number per pole, I_1 is the current in this error coil. The total ampere-turn $N_1 I_1$ is determined by the strength of error field.

In the same way the current distribution of ideal self-correction coil is given by following equation,

$$i_2(\theta) = n\ N_2\ I_2 \cos(n\theta) \quad . \tag{6}$$

Figure 2 shows the arrangement of self-correction coil and error coil, where R_1 = error coil radius, R_2 = self-correction radius, b = Iron ($\mu = \infty$) Yoke inner radius.

The self-inductance L_2 of this self-correction coil and mutual-inductance M between the error coil and self-correction coil are given as the following equations, (see Appendix),

$$L_2 = \frac{\pi\mu_o}{2}\left\{1 + \left(\frac{R_2}{b}\right)^{2n}\right\} n\, N_2^2 \tag{7}$$

$$M = \frac{\pi\mu_o}{2}\left\{1 + \left(\frac{R_2}{b}\right)^{2n}\right\}\left(\frac{R_2}{R_1}\right)^{n} \cdot n\, N_1 N_2 \tag{8}$$

By substituting the equations (7) and (8) to equation (4), we get the induced current I_2 in the self-correction coil,

$$I_2 = - \frac{\frac{\pi\mu_o}{2}\left\{1 + \left(\frac{R_1}{b}\right)^{2n}\right\}\left(\frac{R_2}{R_1}\right)^{n} \cdot n \cdot N_1 \cdot N_2}{\frac{\pi\mu_o}{2}\left\{1 + \left(\frac{R_2}{b}\right)^{2n}\right\} \cdot n \cdot N_2^{\,2}}$$

$$= - \frac{\left\{1 + \left(\frac{R_1}{b}\right)^{2n}\right\}}{\left\{1 + \left(\frac{R_2}{b}\right)^{2n}\right\}} \left(\frac{R_2}{R_1}\right)^{n} \cdot \frac{N_1}{N_2} \cdot I_1 \quad . \tag{9}$$

The strength of magnetic flux density B by the ideal current sheet is expressed following equation (see Appendix)

$$B = - \frac{\mu_o I_o}{2R}\left(\frac{r}{R}\right)^{n-1}\left\{1 + \left(\frac{R}{b}\right)^{2n}\right\} \cdot \tag{10}$$

where current distribution is given by

$$i(\theta) = I_o \cos(n\theta) \tag{11}$$

By substituting $I_o = nN_1I_1$ of equation (5) to equation (10), the strength of magnetic flux density B_1 produced by the error coil is calculated,

$$B_1 = -\frac{\mu_o\ n\ N_1\ I_1}{2R_1}\left(\frac{r}{R_1}\right)^{n-1}\left\{1+\left(\frac{R_1}{b}\right)^{2n}\right\} \tag{12}$$

In the same way substituting the I_2 of equation (9) to the equation (10), the strength of magnetio flux density B_2 produced by the self-correction coil is expressed,

$$B_2 = -\frac{\mu_o n N_2}{2R_2}\left(\frac{r}{R_2}\right)^{n-1}\left\{1+\left(\frac{R_2}{b}\right)^{2n}\right\}\cdot(-)\cdot\frac{\left\{1+\left(\frac{R_1}{b}\right)^{2n}\right\}}{\left\{1+\left(\frac{R_2}{b}\right)^{2n}\right\}}\cdot\left(\frac{R_2}{R_1}\right)^{n}\cdot\frac{N_1}{N_2}\ I_1$$

$$= \frac{\mu_o n N_1 I_1}{2R_1}\left(\frac{r}{R_1}\right)^{n-1}\left\{1+\left(\frac{R_1}{b}\right)^{2n}\right\} = -\ B_1 \tag{13}$$

The induced current by the error field in the ideal self-correction coil produces the magnetic field B_2 which is completely the same strength and in opposite direction to the error field and cancels out the error field inside the self-correction coil.

In practical case, because error field includes many multipole components, to correct these error field components we need the same number of self-correction coil. Figure 3 shows this case, where because orthogonal property of each self-correction coil, there is no coupling between each self-correction coil.

NON-IDEAL SELF-CORRECTION COIL WINDING CASE

(a) Single block approximation

Figure 4 shows the simplified model for non-ideal self-correction coil system, where L_1 is the self inductance of error coil winding, L_2 is the self-inductance of self-correction coil fundamental mode, ΔL is its high

mode. (In non-ideal self-correction coil case, due to the imperfection of self-correction coil winding distribution, an additional self-inductance ΔL of higher mode appear). M is the mutual-inductance between the error coil winding and self-correction coil.

The currents I_1 and I_2 in the circuit are decided by solving the follwoing differential equations;

$$\begin{cases} E = (L_0 + L_1)\dfrac{dI_1}{dt} + I_1R_1 + M\dfrac{dI_2}{dt} \\ 0 = (L_2 + \Delta L)\dfrac{dI_2}{dt} + I_2R_2 + M\dfrac{dI_1}{dt} \end{cases} \tag{14}$$

In the same way as the ideal self-correction coil case, because current I_1 in the main dipole coil current is controlled by the current control feedback system, the current I_2 is solved directly as following, assuming $R_2 = 0$ and $I_1 = I_2 = 0$ at $t = 0$;

$$\left(L_2 + \Delta L\right)\frac{dI_2}{dt} + M\frac{dI_1}{dt} = 0 \tag{15}$$

$$I_2 = -\frac{M}{L_2 + \Delta L} \cdot I_1 \tag{16}$$

For the error coil winding, we assumed the ideal coil winding, then the current distribution of this error coil is expressed as following,

$$i_1(\theta) = n\ N_1\ I_1 \cos(n\theta) \tag{17}$$

where n is the multi-polarity of error field considered and N_1 is the total turn number per pole.

Figure 5 shows the current distribution of single block approximation for self-correction coil. Here we introduce "reduced space" to make it easier to express the coil winding distribution. The angles θ_0 and $\delta\theta$ in the reduced space correspond to θ_0/n and $\delta\theta/n$ in real space. Because of periodic property of self-correction coil winding distribution (see Figure A1), we need only two parameters $\delta\theta/n$ and θ_0/n for 1 block approximation case.

By using the Fourier expansion we get the following expression for one block approximation coil case (see Appendix),

$$i\ (\theta) = \sum_{\ell=1}^{\infty} I_{2\ell-1}^{n} \cos\left\{n(2\ell - 1)\ .\ \theta\right\} \tag{18}$$

where

$$I_{2\ell-1}^{n} = \frac{4nN_2I_2}{\pi(2\ell-1)} \quad \frac{\cos\left\{(2\ell-1)\ .\ \theta_0\right\}.\ \sin\left\{(2\ell-1)\ .\ \frac{\delta\theta}{2}\right\}}{\delta\theta/2} \tag{19}$$

In this single block approximation case, because of imperfect approximation to cos $(n\theta)$ distribution shape, the higher order mode current components $I_{2\ell-1}^{n}$ $(\ell=2, \ldots, \infty)$ appear. According to this, the self-inductance L of this self-correction coil winding is expressed as follows (see Appendix).

$$L = \sum_{\ell=1}^{\infty} L_{2\ell-1}^{n} \tag{20}$$

where self-inductance $L_{2\ell-1}^{n}$ for each mode is given,

$$L^{n}_{2\ell-1} = \frac{\pi\mu_o (I^{n}_{2\ell-1})^2}{2n(2\ell-1)} \cdot \left\{ 1 + \left(\frac{R_2}{b}\right)^{2n(2\ell-1)} \right\} \Big/ I_2^{\,2}$$

$$= \frac{8\mu_o n N_2^{\,2}}{\pi(2\ \ -1)^3} \cdot \frac{\cos^2\left\{(2\ell-1)\ .\ \theta_o\right\} .\ \sin^2\left\{(2\ell-1)\ \frac{\delta\theta}{2}\right\}}{(\delta\theta/2)^2}$$

$$\times \left\{ 1 + \left(\frac{R_2}{b}\right)^{2n(2\ell-1)} \right\} \tag{21}$$

From the discussion above we realize that self-inductance of non-ideal self-correction coil consist of its fundamental mode L^n_1 and higher order mode $L^n_{2\ell-1}$.

The mutual-inductance M between the error coil and this single block approximation self-correction coil is expressed (see Appendix),

$$M = 2\mu_o \left\{ 1 + \left(\frac{R_1}{b}\right)^{2n} \right\} \cdot \left(\frac{R_2}{R_1}\right)^n \cdot n\ N_1 N_2 \cdot \frac{\cos(\theta_o) \cdot \sin\ (\delta\theta/2)}{\delta\theta/2} \tag{22}$$

From orthogonal properties of cosine function the magnetic coupling exist only between error coil winding and fundamental mode of single block self-correction coil winding.

Substituting the equations (20), (21), (22) to equation (16) we get the induced current I_2 in the self-correction coil,

$$I_2 = -\frac{M}{\sum_{\ell=1}^{\infty} L^{n}_{2\ \ -1}}\ I_1$$

$$= -\frac{\pi}{4} \cdot \left(\frac{N_1}{N_2}\right) \cdot \left(\frac{R_2}{R_1}\right)^n \cdot \frac{\left\{ 1 + \left(\frac{R_1}{b}\right)^{2n} \right\} \cos\theta_o\ .\ \sin\left(\frac{\delta\theta}{2}\right) \Big/ \left(\frac{\delta\theta}{2}\right)}{\sum_{\ell=1}^{\infty} \frac{\cos^2\left\{(2\ell-1)\ .\ \theta_o\right\} .\ \sin^2\left\{(2\ell-1)\ .\ \frac{\delta\theta}{2}\right\}}{(2\ell-1)^3\ .\ (\delta\theta/2)^2}} \cdot I_1 \tag{23}$$

The strength of magnetic flux density B_1 by the error coil is expressed in the following equation,

$$B_1 = -\frac{\mu_o I_1 n N_1}{2R_1} \cdot \left(\frac{r}{R_1}\right)^{n-1} \left\{1 + \left(\frac{R_1}{b}\right)^{2n}\right\} \tag{24}$$

The strength of magnetic flux density B_2 by the induced current in the self-correction coil is expressed as follows,

$$B_2 = -\frac{\mu_o I_1^n}{2R_2} \cdot \left(\frac{r}{R_2}\right)^{n-1} \cdot \left\{1 + \left(\frac{R_2}{b}\right)^{2n}\right\} \tag{25}$$

where the fundamental mode of current Fourier component $I_{2\ell-1}$ (ℓ=1) are given from equation (19),

$$I_1^n = \frac{4n\ N_2\ I_2}{\pi} \cdot \frac{\cos\theta_o \cdot \sin(\delta\theta/2)}{\delta\theta/2} \tag{26}$$

from equations (23), (25), (26),

$$B_2 = -\frac{\mu_o I_1\ nN_1}{2R_1} \left(\frac{r}{R_1}\right)^{n-1} \cdot \left\{1 + \left(\frac{R_1}{b}\right)^{2n}\right\}$$

$$\times \frac{\cos^2\theta_o \cdot \sin^2\left(\frac{\delta\theta}{2}\right) \Big/ \left(\frac{\delta\theta}{2}\right)^2 \cdot \left\{1 + \left(\frac{R_2}{b}\right)^{2n}\right\}}{\sum_{\ell=1}^{\infty} \frac{\cos^2\{(2\ell-1)\ \theta_o\} \cdot \sin^2\{(2\ell-1)\ \frac{\delta\theta}{2}\}}{(2\ell-1)^3 \cdot (\delta\theta/2)^2} \cdot \left\{1 + \left(\frac{R_2}{b}\right)^{2n(2\ell-1)}\right\}} \tag{27}$$

For measure of completeness of self-correction effect, we introduce the efficiency η of self-correction coil by the ratio of induced magnetic field

by the self-correction coil B_2 and error field B_1;

$$\eta = \frac{B_2}{B_1} \tag{28}$$

Then the efficiency η of self-correction coil for single block approximation is, from equations (24) and (27),

$$\eta = \frac{\cos^2 \theta_0 \quad \sin^2\left(\frac{\delta\theta}{2}\right) \Big/ \left(\frac{\delta\theta}{2}\right)^2 \quad \left\{ 1 + \left(\frac{R_2}{b}\right)^{2n} \right\}}{\sum_{\ell=1}^{\infty} \frac{\cos^2\left\{(2\ell-1) \quad \theta_0\right\} . \sin^2\left\{(2\ell-1) . \frac{\delta\theta}{2}\right\}}{(2\ell-1)^3 . (\delta\theta/2)^2} . \left\{ 1 + \left(\frac{R_2}{b}\right)^{2n(2\ell-1)} \right\}} \tag{29}$$

From equation (20), we realize that in non-ideal self-correction coil case, to the self-inductance L, in addition to the contribution of fundamental mode L_1^n, the higher mode contributions $L_{2\ell-1}^n$ exist. On the other hand as shown in equation (22), the contribution to the mutual-inductance M is fundamental mode only. Because of this additional higher mode contribution ΔL to the self-inductance L (see Figure 4), the efficiency η of non-ideal self-correction coil become lower than 1.

(a) Multi-block approximation

To get a good self-correction efficiency η, we require the self-correction coil which is good approximation to ideal $\cos(n\theta)$ distribution. For this purpose we can use the multi-block configuration. By superposing the single block case, we can calculate the current Fourier coefficient $I^n_{s\ 2\ell-1}$ of multi-block approximation current distribution. And using this $I^n_{s\ 2\ell-1}$, we can calculate L, M and η.

We discuss here how to solve the L, M, η for multi-block self-correction coil case.

Figure 6 shows the current distribution of multi-block self-correction coil case, where θ_i, $\delta\theta_i$, N_i represent the center position, width and coil turn number of i-th coil block in the reduced space.

Then the current distribution $i(\theta)$ for whole self-correction coil is expressed in the following equation. (Superposition of each block current distribution equation (18)),

$$i\ (\theta) = \sum_{\ell=1}^{\infty} I^n_{S\ 2\ell-1} \cos\left\{n(2\ell - 1)\ \theta\right\} \tag{30}$$

where

$$I^n_{s\ 2\ell-1} = \sum_{i=1}^{\nu_{max}} I^n_{s\ 2\ell-1}\ (i) \tag{31}$$

$$I^n_{2\ell-1}(i) = \frac{4nN(i)I_2}{\pi(2\ell-1)} \quad \frac{\cos\left\{(2\ell-1)\ \theta(i)\right\}\sin\left\{(2\ell-1)\ .\ \frac{\delta\theta(i)}{2}\right\}}{\delta\theta(i)/2}$$

where $I^n_{2\ell-1}$ (i) is (2 -1)-th mode current Fourier coefficient of i-th coil block and $I_{s\ 2\ -1}$ is the summation of $(2\ell-1)$ - the mode current Fourier coefficient over whole coil block.

The self-inductance L, mutual-inductance M are expressed in the following equations,

$$L = \sum_{\ell=1}^{\infty} L^{n}_{2\ell-1}$$

$$L^{n}_{2\ell-1} = \frac{\pi\mu_o (I^{n}_{s\ 2\ell-1})^2}{2n(2\ell-1)} \left\{1 + \left(\frac{R_2}{b}\right)^{2n(\ell-1)}\right\} \Big/ I_2^{\ 2}$$

$$= \sum_{i=1}^{i_{max}} \frac{8\mu_o n N_2^{\ 2}}{\pi(2\ell-1)^3} \cdot \frac{\cos^2\left\{(2\ell-1)\ \theta_o(i)\right\} \sin^2\left\{(2\ell-1)\ \frac{\delta\theta(i)}{2}\right\}}{(\delta\theta(i)/2)^2}$$

$$\times \left\{1 + \left(\frac{R_2}{b}\right)^{2n(2\ell-1)}\right\} \tag{32}$$

$$M = \frac{\pi\mu_o I_1 N_1}{2} \left(\frac{R_2}{R_1}\right)^n \left\{1 + \left(\frac{R_1}{b}\right)^{2n}\right\} I^{n}_{s1} \Big/ I_2$$

$$= \sum_{i=1}^{i_{max}} 2\mu_o n N_1 \left(\frac{R_2}{R_1}\right)^n \frac{\cos\left\{\theta(i)\right\} \cdot \sin\left\{\delta\theta(i)/2\right\}}{(\delta\theta(i)/2)} \cdot \left\{1 + \left(\frac{R_1}{b}\right)^{2n}\right\} \tag{33}$$

where $L^{n}_{2\ell-1}$ is a self-inductance of each-mode for the self-correction coil, i.e., L^{n}_{1} is for fundamental mode, L^{n}_{3} is for 2nd higher mode etc.

The relation between I_1 and I_2, currents in error coil and self-correction coil is given by the following same equation discussed before, (see equation (4)),

$$I_2 = -\frac{M}{L} I_1$$

The strength of magnetic flux densities B_1, B_2 by the error coil winding and the induced current in the self-correction coil winding are expressed as the following equations respectively.

$$B_1 = -\frac{\mu_o I_1 n N_1}{2R_1} \cdot \left(\frac{r}{R_1}\right)^{n-1} \left\{1 + \left(\frac{R_1}{b}\right)^{2n}\right\}$$

$$B_2 = -\frac{\mu_o I_S{}^n{}_1}{2R_1} \cdot \left(\frac{r}{R_2}\right)^{n-1} \left\{1 + \left(\frac{R_2}{b}\right)^{2n}\right\} \tag{34}$$

where I_{s1} is the current distribution Fourier coefficient of fundamental mode, given by following equation (see equation (31)),

$$I_{s1}^{n} = \sum_{i=1}^{i_{max}} \frac{4N(i)}{\pi} \cdot \frac{\cos\left\{\theta(i)\right\} \cdot \sin\left\{\delta\theta(i)/2\right\}}{\delta\theta(i)/2} \times I_2 \tag{35}$$

From the equations discussed above we can calculate the efficiency η of this self-correction coil. (See equation (28)).

Example 1. Single block approximation self-correction coil.

As for example, we calculate self-inductance L, mutual inductance M and efficiency η for single block approximation self-correction coil case. Figure 7 shows the sextupole self-correction coil geometry and its current distribution in the reduced space. Figure 8 (a), (b), show the current Fourier coefficient $I^3_{2\ell-1}$ and self-inductance $L^3_{2\ell-1}$ of this single block approximation sextupole self-correction coil (see equation (19), (21)). Figure 9 gives the efficiency η of this self-correction coil (where we also represent the efficiencies η of this kind of self-correction coil shown Figure (7) for quadrupole (η = 2), decapole (η = 5)). When we choose $\delta\theta$ small, for example $\delta\theta = 1^\circ$ or 4°, the current Fourier coefficient $I^3_{2\ell-1}$ decrease slowly against mode number ℓ and because of this self-inductance $L^3_{2\ell-1}$ decrease slowly, that is the contribution of higher mode to the total self-inductance is large, i.e. the efficiency η for this small $\delta\theta$ self-correction coil is low.

If we choose the $\delta\theta = 60^\circ$, then because $\theta_0 = \delta\theta/2 = 30^\circ$, the current Fourier coefficient (equation 14) $I^m_{2\ell-1}$ becomes zero for $\ell = 2$, i.e., the 2nd mode. This fact corresponds to the efficiency η peak at $\delta\theta = 60^\circ$ (η = 98%) in Figure 9. The small difference of efficiency η between quadrupole (n = 2), sextupole (n = 3) and decapole (n = 5) at low $\delta\theta$ on Figure 9 comes from the difference of shielding effect of iron ($\mu = \infty$) Yoke for different multi-polarity η (see equation (29)).

Figure 10 shows also the sextupole self-correction coil geometry and its current distribution in the reduced space, in this case we fixed the $\delta\theta = 10^\circ$ and changes the current block center angle θ_0 from 5° to 85° to see the θ_0 dependence. Figure 11 gives the calculated efficiency η of this self-correction coil. Because of the small $\delta\theta$ value, efficiency η is low.

Example 2. Two block approximation self-correction coil.

As for example of two block approximation self-correction coil we choose the two shell type self-correction coil. Figure 12 shows the sextupole self-correction geometry and current distribution in the reduced space. In this geometry, if we neglect the coil thickness for simplicity, the combination of $\theta_1 = 78^\circ$ and $\theta_2 = 42^\circ$ gives the zero current Fourier coefficients $I^3_{2\ell-1}$ for 2nd and 3rd mode ($\ell = 2, 3$). (Of course, it is very easy to take into account the finite coil thickness.)

Table 1 gives the parameters of two-shell type self-correction coil.

Table 2 shows the current Fourier coefficients $I^3_{2\ell-1}$, self-inductance $L_{2\ell-1}$ for each mode, total self-inductance L and mutual -inductance M between this two shell type self-correction coil and error coil (where we assume the total turn number per pole of error coil N_1 is 1) and the efficiency η.

In this two block approximation case we can cancel out the 2nd and 3rd mode self-inductance L_9, L_{15} by adjusting θ_1, θ_2, the higher mode contribution to the total self-inductance L becomes small and get the high efficiency of self-correction coil $\eta = 99.8\%$.

TABLE LIST

Table 1. Parameter table of 2 shell type self-correction coil.

Table 2. The current Fourier coefficient $I^3_{2\ell-1}$, self-inductance $L^3_{2\ell-1}$, L, mutual-inductance M and efficiency η for 2 shell-type self-correction coil.

REFERENCES

(1) Richard A. Beth. INDUCED EMFS IN TWO-DIMENSIONAL FIELDS, Proceedings The Fourth International Conference on Magnet Technology, Brookhaven, 1972, p. 600.

(2) A. Dael, F. Kircher, J. Perot. USE OF SUPERCONDUCTING SELF-CORRECTING HARMONIC COILS FOR PULSED SUPERCONDUCTING DIPOLE OR MULTIPOLE MAGNETS 1974 APPLIED SUPERCONDUCTING CONFERENCE, Oakbrook, Illinois USA, 1974.

TABLE 1

$n = 3$	: Sextupole
$R_1 = 4$	: Main Coil (Error Coil) Radius
$R_2 = 3$ cm	: Self-correction Coil Radius
$b = 5$ cm	: Iron ($\mu = \infty$) Shielding Yoke Radius
$\theta_1 = 78^\circ$	: Coil 1 Angle (Reduced Space)
$\theta_2 = 42^\circ$	: Coil 2 Angle (Reduced Space)
$N_1 = 39$ turns	: Coil 1 Turn Number
$N_2 = 21$ turns	: Coil 2 Turn Number

TABLE 2

Mode No.	Multi-Polarity M	Current Fourier Coeff. $I^3_{2\ell}{}^{-1}/I_2$ Coil 1	Coil 2 [Turns]	Total	Self-inductance $L^3_2{}^{-1}$ [H/M]
1	3	1.07×10^{2}	7.32×10^{1}	1.80×10^{2}	2.24×10^{-2}
2	9	-2.95×10^{1}	2.95×10^{1}	1.14×10^{-5}	2.87×10^{-17}
3	15	1.09×10^{1}	-1.09×10^{1}	-3.81×10^{-6}	1.91×10^{-18}
4	21	-1.63	-1.43×10^{1}	-1.59×10^{1}	2.38×10^{-5}
5	27	-3.76	3.76	-2.19×10^{-5}	3.52×10^{-17}
6	33	6.66	9.73	1.64×10^{1}	1.61×10^{-5}
7	39	-7.69	-8.80×10^{-1}	8.57	3.72×10^{-6}
8	45	7.30	-7.30	0	0
9	51	-5.88	-6.73×10^{-1}	6.55	1.66×10^{-6}
10	57	3.85	5.63	9.49	3.12×10^{-6}

Total self-indutance	$L = 2.24 \times 10^{-2}$ [H/M]
Mutual inductance	$M = 1.89 \times 10^{-4}$ [H/M]
Induced current in self-correction coil ($\Delta B/B_0$ at 1 cm $= 10^{-3}$ at $B_0 = 5$T)	$I_2 = 11.4$ [A]
Efficiency	$\eta = 0.9978$

FIGURE CAPTIONS

Figure 1. The model of magnet system with ideal self-correction coil.

Figure 2. Configuration of magnet with self-correction coil.

Figure 3. The model of magnet system with many ideal self-correction coils.

Figure 4. The model of magnet with non-ideal self-correction coil.

Figure 5. Single block self-correction coil current distribution.

Figure 6. Multi block self-correction coil current distribution.

Figure 7. Single block sextupole self-correction coil current distribution -- $\delta\theta$ dependence.

Figure 8. Single block sextupole self-correction coil current Fourier coefficients $I^3_{2\ell-1}$ and self-inductance components $L^3_{2\ell-1}$ for higher mode.

Figure 9. Single block self-correction coil efficiency η -- $\delta\theta$ dependence.

Figure 10. Single block sextupole self-correction coil current distribution -- $\delta\theta$ dependence.

Figure 11. Single block self-correction coil efficiency η -- $\delta\theta$ dependence.

Figure 12. Two block approximation self-correction coil shell type current distribution

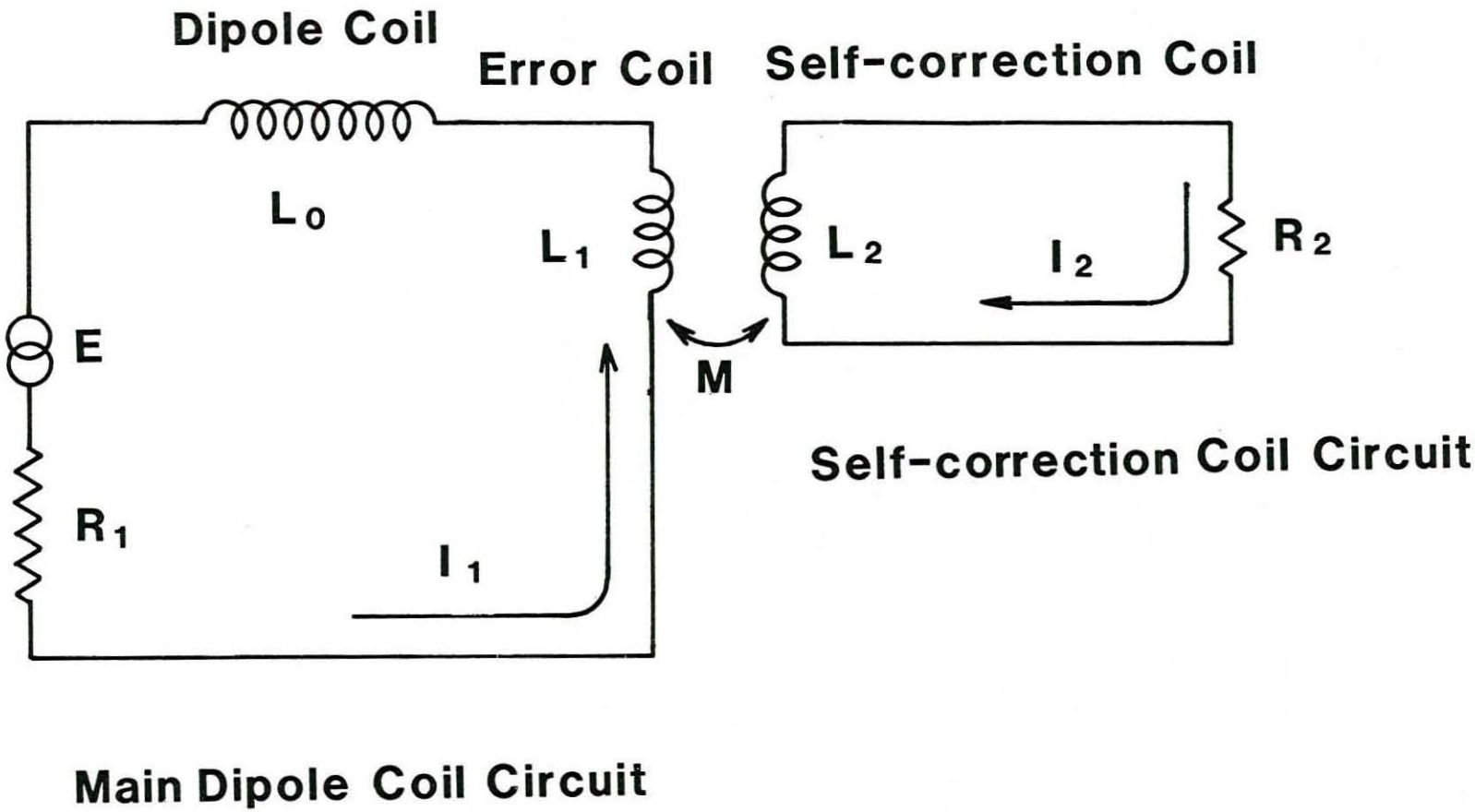

XBL 837-10491

Fig. 1

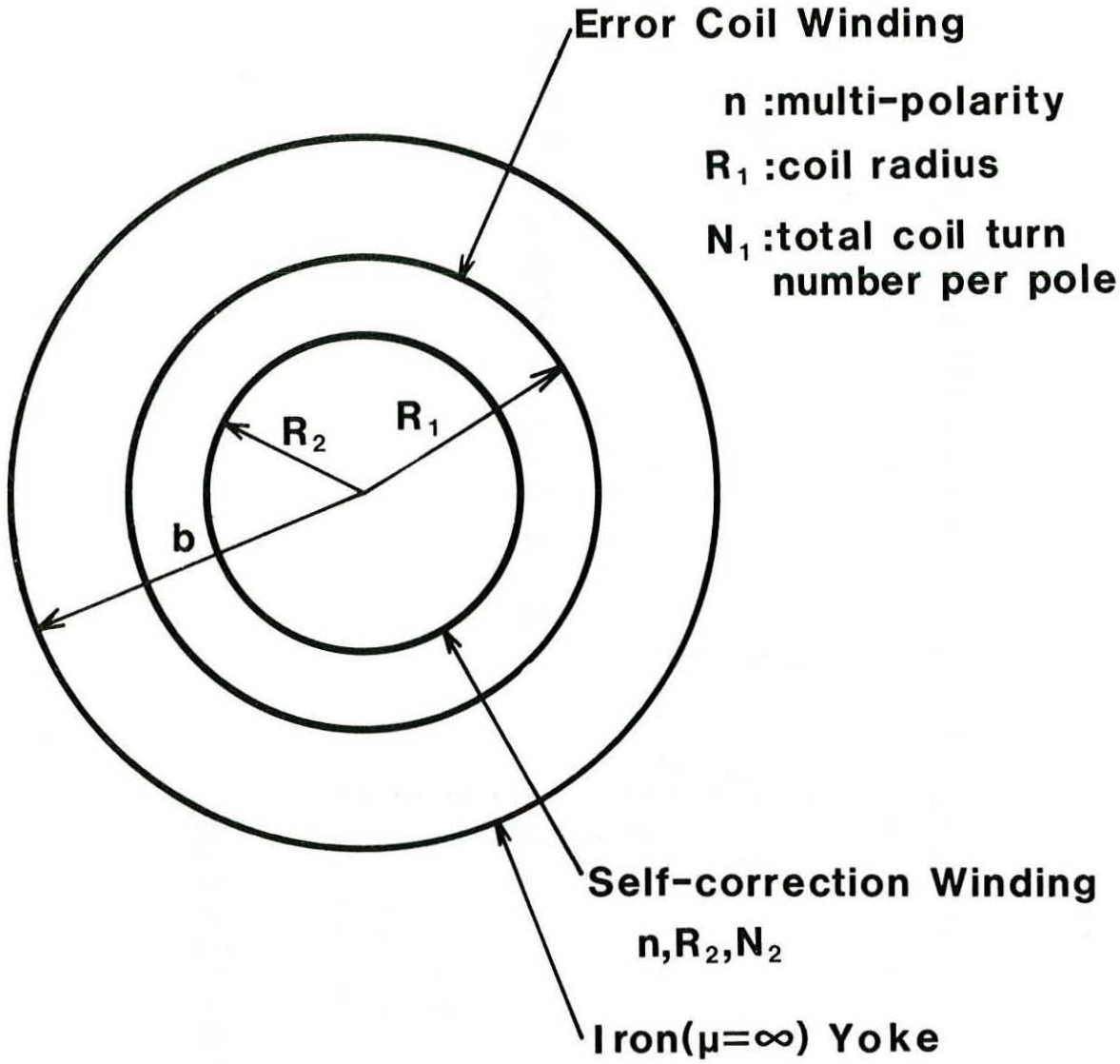

XBL 837-10492

Fig. 2

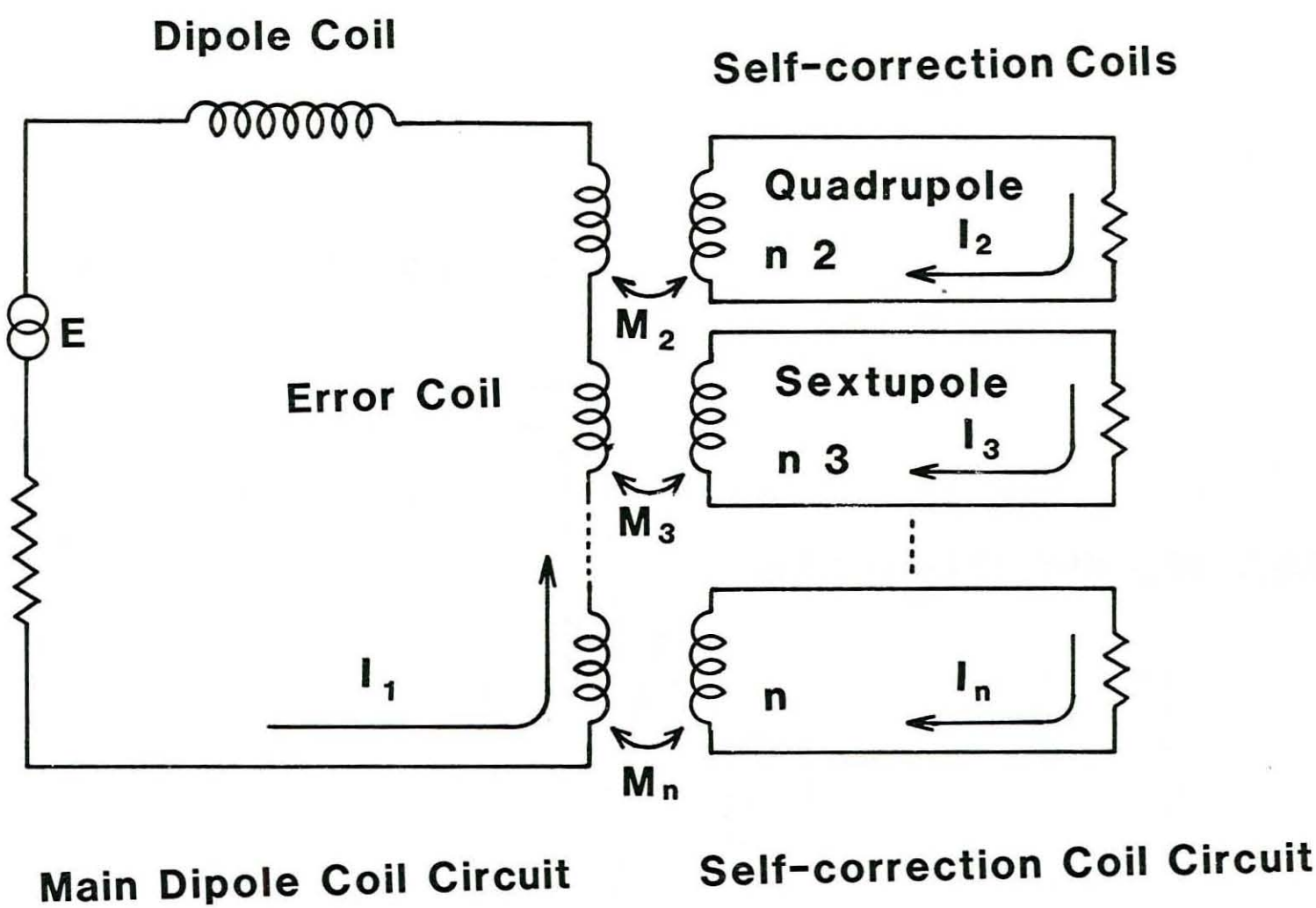

XBL 837-10493

Fig. 3

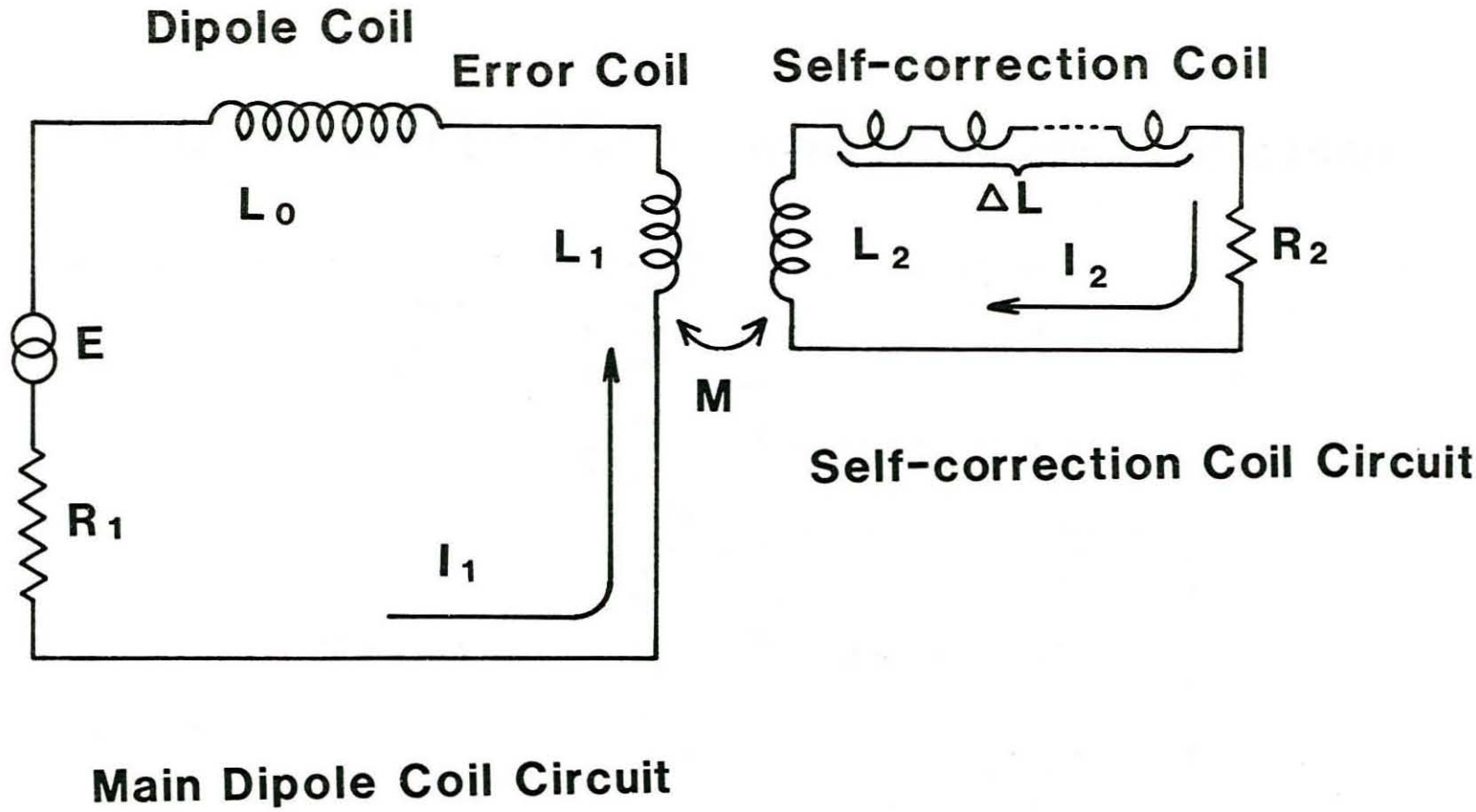

XBL 837-10494

Fig. 4

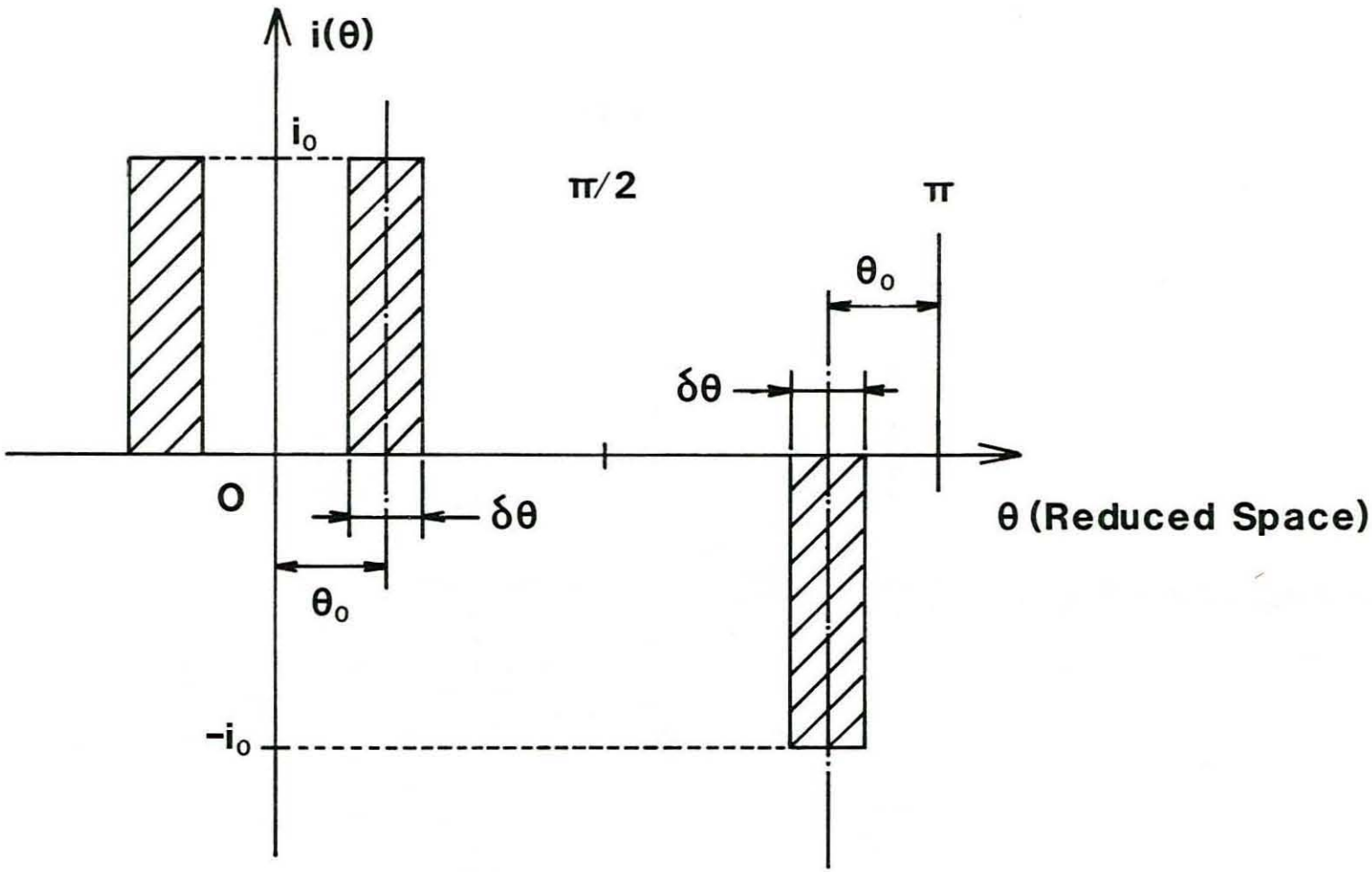

XBL 837-10495

Fig. 5

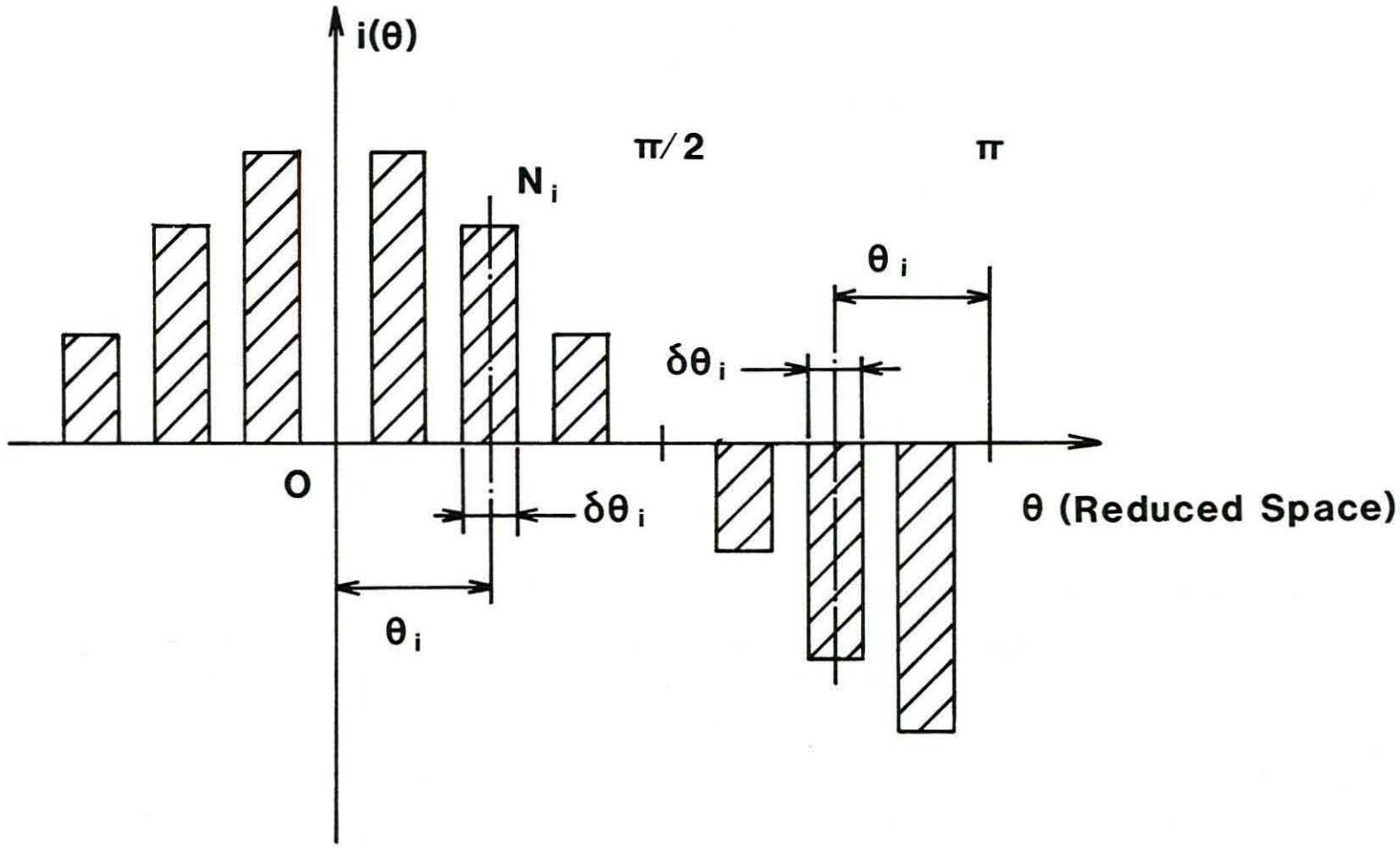

XBL 837-10496

Fig. 6

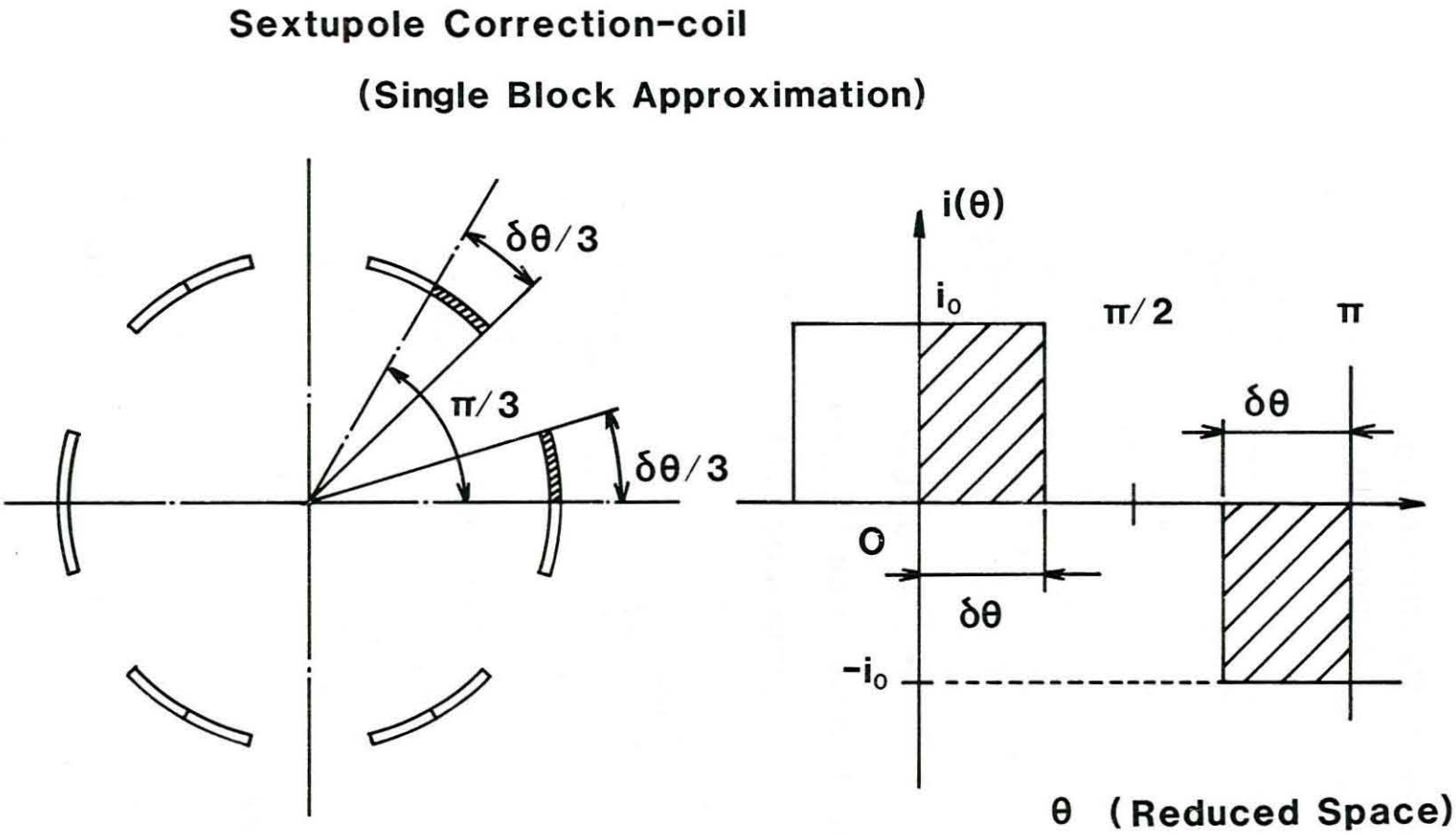

XBL 837-10497

Fig. 7

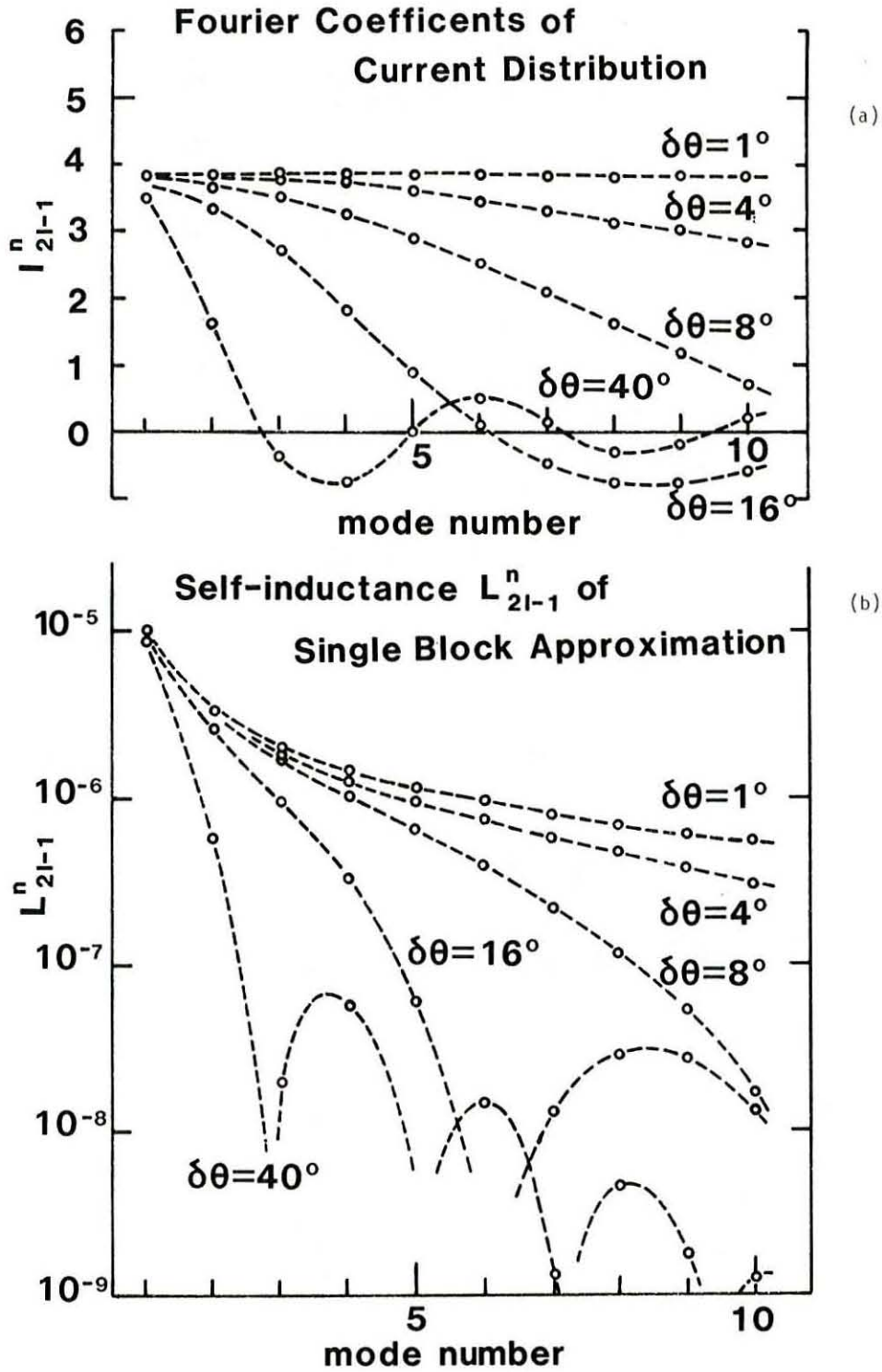

XBL 837-10498

Fig. 8

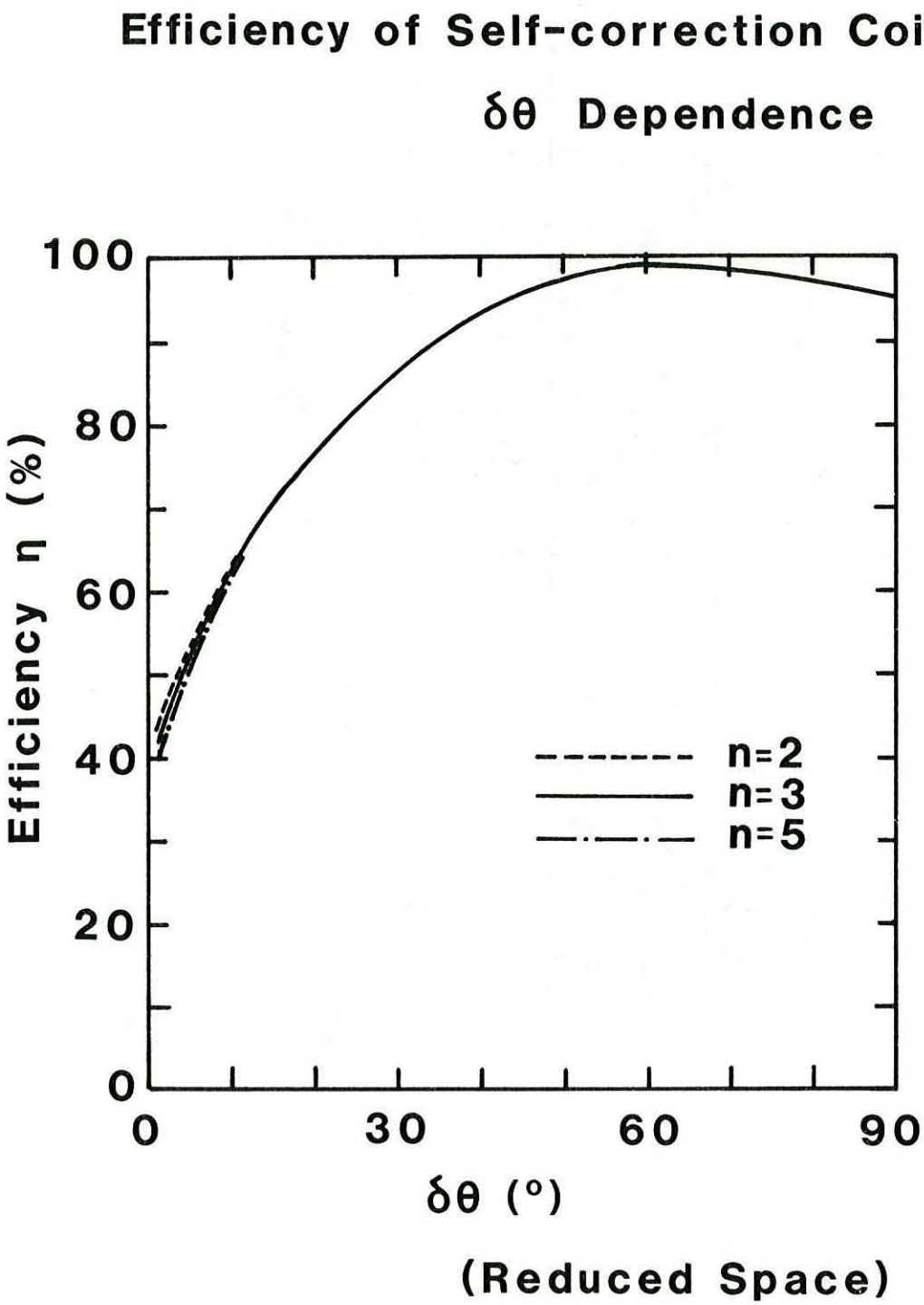

XBL 837-10499

Fig. 9

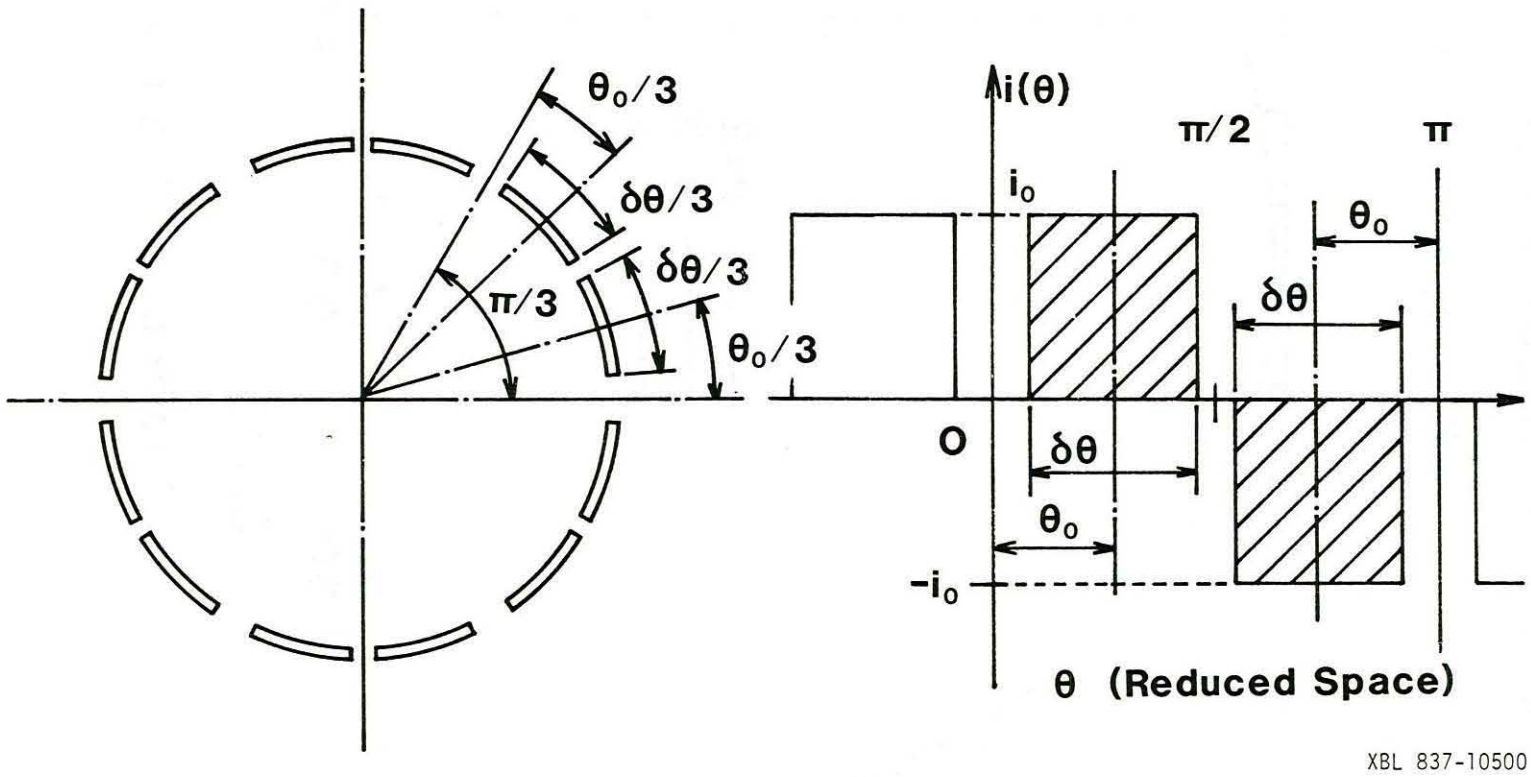
θo/3
δθ/3
δθ/3
π/3
θo/3
i(θ)
π/2
π
io
θo
δθ
O
δθ
θo
-io
θ (Reduced Space)
XBL 837-10500

Fig. 10

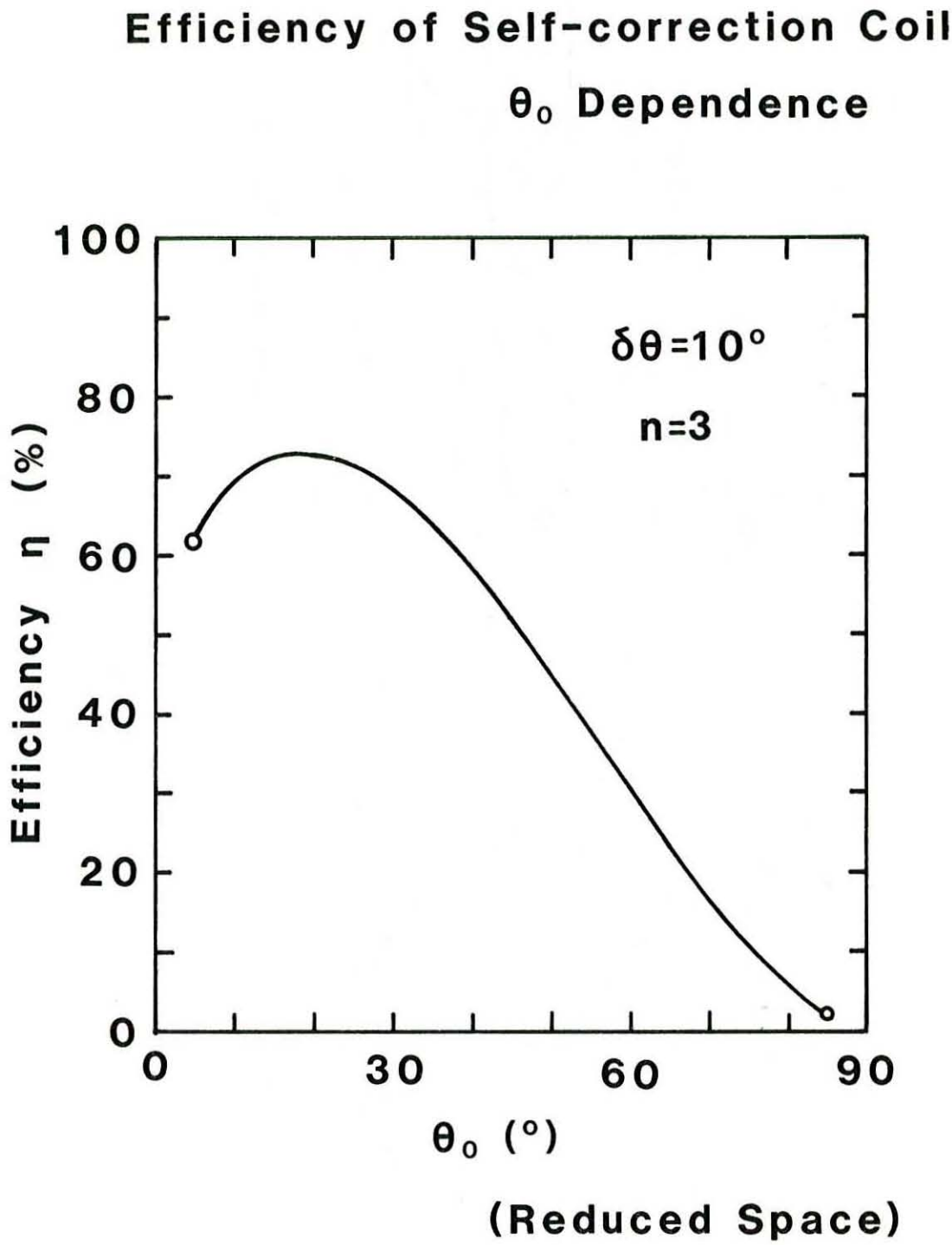

XBL 837-10501

Fig. 11

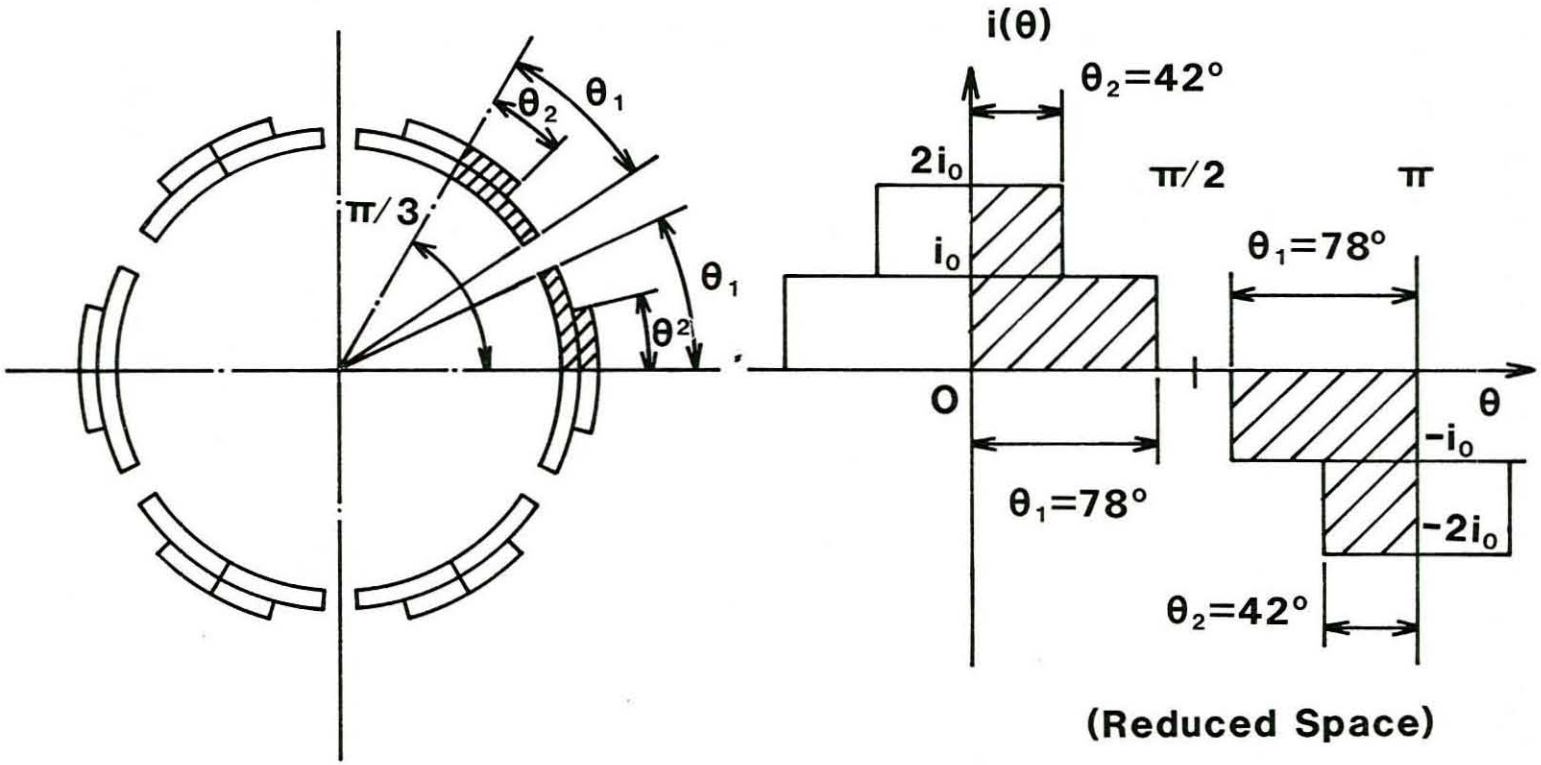

XBL 837-10502

Fig. 12

APPENDIX A

(a) Self-inductance L for ideal coil winding.

The current distribution of ideal current sheet (multi-polarity m, radius R and infinite thickness) is expressed in the following equation,

$$i(\theta) = I_m \cos(m\theta) \tag{A1}$$

where I_m is the normalization factor of current distribution.

If the current sheet coil is connected in series, coil turn number distribution $n(\theta)$ will be expressed the following way,

$$n(\theta) = \frac{i(\theta)}{I_o} = \frac{I_m}{I_o} \cdot \cos(m\theta) \tag{A2}$$

where I_o is the current in the coil.

The total turn number per pole N is calculated by integrating $n(\theta)$ from $\theta = 0$ to $\theta = \pi/2m$,

$$N = \int_0^{\pi/2m} n(\theta)d\theta = \frac{I_m}{I_o} \int_0^{\pi/2m} \cos(m\theta)d\theta = \frac{I_m}{mI_o} \tag{A3}$$

From this result the current distribution $i(\theta)$ of equation (A1) is expressed,

$$\boxed{i(\theta) = I_o \cdot mN \cdot \cos(m\theta) \qquad (A4)}$$

The vector potential A_z for the ideal current sheet of equation (A4) is expressed as the following equation,

$$\begin{aligned} A_z^m &= \frac{\mu_o I_m}{2m} \left\{1 + \left(\frac{R}{b}\right)^{2m}\right\} \left(\frac{r}{R}\right)^m \cos(m\theta) \\ &= \frac{\mu_o N I_o}{2} \left\{1 + \left(\frac{R}{b}\right)^{2m}\right\} \left(\frac{r}{R}\right)^m \cos(m\theta) \end{aligned} \tag{A5}$$

where R is the coil radius and b is the iron ($\mu = \infty$) Yoke inner radius.

Then the flux linkage per unit length φm between the coil and its induced magnetic flux is expressed as following,

$$\varphi m = \int_{-\pi}^{\pi} A_z(R,\theta) \cdot n(\theta) d\theta \tag{A6}$$

from the equations (A5), (A2), and (A4),

$$\varphi m = \int_{-\pi}^{\pi} \frac{\mu_o I_m}{2m} \cdot \left\{ 1 + \left(\frac{R}{b}\right)^{2m} \right\} \left(\frac{R}{R}\right)^{m} \cdot \frac{I_m}{I_o} \cos^2\theta \, d\theta$$

$$= \frac{\pi\mu_o}{2} \left\{ 1 + \left(\frac{R}{b}\right)^{2m} \right\} \cdot mN^2 \cdot I_o \tag{A7}$$

From the following equation, we get the self-inductance L,

$$emf \equiv L\dot{I} = \dot{\varphi}m, \tag{A8}$$

$$\boxed{L = \frac{\pi\mu_o}{2} \left\{ 1 + \left(\frac{R}{b}\right)^{2m} \right\} mN^2, \qquad (A9)}$$

where L is the self-inductance of unit length [H/m].

(b) Self-inductance L for non-ideal coil winding

In the previous discussion, we calculated the self-inductance L of ideal current sheet. But in practical case it is very difficult to make such a coil, so that we must make an approximation coil. We discuss the practical case here.

Figure (A1) shows the single block approximation current distribution where i_o is the peak current density, θ_1/n, θ_2/n, θ_3/n, θ_4/n, express the block position and $\delta\theta/n$, θ_o/n represent width and center position of current block respectively.

There are the following relations between θ_1, θ_2, θ_3, θ_4, $\delta\theta$, and θ_o,

$$\theta_1 = \theta_o - \delta\theta/2, \quad \theta_2 = \theta_o + \delta\theta/2,$$

$$\theta_3 = \pi - \theta_2, \quad \theta_4 = \pi - \theta_1,$$

$$\theta_1 + \theta_2 = 2\theta_o, \tag{A10}$$

and for normalization of current density,

$$NI_o = i_o \delta\theta/n$$

i.e.,

$$i_o = nNI_o/\delta\theta. \tag{A11}$$

From the formula of Fourier analysis,

$$f(x) = \sum_{m=0}^{\infty} a_m \cos\left(\frac{m\pi x}{\ell}\right) \qquad \text{for } [-\ell, \ell] \tag{A12}$$

$$a_m = \frac{1}{\ell} \int_{-\ell}^{\ell} f(t) \cdot \cos\left(\frac{m\pi t}{\ell}\, dt\right) \tag{A13}$$

by putting π/n to ℓ, we get,

$$i(\theta) = \sum_{m=0}^{\infty} I_m^n \cos(nm\theta) \tag{A14}$$

$$I_m^n = \frac{n}{\pi} \int_{-\pi/n}^{\pi/n} i(\theta)\cos(nm\theta)d\theta \tag{A15}$$

Current Fourier coefficient I_m^n is calculated following ways,

$$I_m^n = \frac{2ni_o}{\pi} \left\{ \int_{\theta_1/n}^{\theta_2/n} \cos(nm\theta)d\theta - \int_{\theta_3/n}^{\theta_4/n} \cos(nm\theta)d\theta \right\} \tag{A16}$$

by putting $n\theta \rightarrow t$, i.e. $nd\theta = dt$,

$$I_m^n = \frac{2i_o}{\pi} \left\{ \int_{\theta_1}^{\theta_2} \cos(mt)dt - \int_{\theta_3}^{\theta_4} \cos(mt)dt \right\} \tag{A17}$$

$$= \frac{2i_o}{\pi} \frac{1}{m} \left\{ \sin(m\theta_2) - \sin(m\theta_1) - \sin(m\theta_4) + \sin(m\theta_3) \right\} \tag{A18}$$

from the equations (A10)

$$\begin{aligned} \sin(m\theta_3) &= \sin(m\pi - m\theta_2) = (-)^{m-1}\sin(m\theta_2) \\ \sin(m\theta_4) &= \sin(m\pi - m\theta_1) = (-)^{m-1}\sin(m\theta_1) \end{aligned} \tag{A19}$$

then,

$$I_m^n = \frac{2i_o}{\pi m} [(1 + (-)^{m-1}) \cdot \sin(m\theta_2) - (1 + (-)^{m-1}) \cdot \sin(m\theta_1)]$$

$$= \begin{cases} 0 & (m = \text{even}) \\ \dfrac{4i_o}{\pi m} \left\{ \sin(m\theta_2) - \sin(m\theta_1) \right\} & (m = \text{odd}) \end{cases} \tag{A20}$$

Using the equations (A10),

$$\left.\begin{matrix} \sin(m\theta_1) \\ \sin(m\theta_2) \end{matrix}\right\} = \sin(m\theta_o \mp m\delta\theta/2) = \sin(m\theta_o)\cos(m\delta\theta/2) \mp \cos(m\theta_o)\sin(m\delta\theta/2)$$

then

$$I_{2\ell-1}^n = \frac{8 \cdot i_o}{\pi(2\ell-1)} \cos[(2\ell-1)\theta_o] \cdot \sin[(2\ell-1) \cdot \delta\theta/2].$$

From the equation (A11),

$$I_{2\ell-1}^n = \frac{4nNI_o}{\pi(2\ell-1)} \cdot \frac{\cos[(2\ell - 1) \cdot \theta_o] \cdot \sin[2\ell - 1) \cdot \delta\theta/2]}{\delta\theta/2}$$

where $\ell = 1, 2, 3., \ldots.$ (A21)

We get the following equations for single block current distribution shown in Figure A1.

$$i(\theta) = \sum_{\ell=1}^{\infty} I^{n}_{2\ell-1} \cos[n(2\ell-1)\theta] \tag{A22}$$

$$I^{n}_{2\ell-1} = \frac{4nNI_o}{\pi(2\ell-1)} \cdot \frac{\cos[(2\ell-1)\cdot\theta_o]\cdot\sin[(2\ell-1)\cdot\delta\theta/2]}{\delta\theta/2} \tag{A23}$$

where ℓ expresses the mode number, there exist the following relationship between the mode number ℓ and multipolarity M,

$$M = n \cdot (2\ell - 1),$$
$$\ell = 1, 2, 3, \ldots \tag{A24}$$

The vector potential $A_z(x,\theta)$ for the single block coil is given as a superposition of the vector potential $A^m_z(r,\theta)$ for each ideal current distribution, from the equation (A5) and (A22),

$$A_z(r,\theta) = \sum_{\ell=1}^{\infty} A_z^{n(2\ell-1)}(r,\theta)$$

$$A_z^{n(2\ell-1)}(x,\theta) = \frac{\mu_o I^{n}_{2\ell-1}}{2n(2\ell-1)} \cdot \left\{1 + \left(\frac{R}{b}\right)^{2n(2\ell-1)}\right\}\left(\frac{r}{R}\right)^{n(2\ell-1)} \cos\left\{n(2\ell-1)\theta\right\} \tag{A25}$$

The coil turn distribution $n(\theta)$ is given, using equation (A22),

$$n(\theta) = \sum_{\ell=1}^{\infty} I^{n}_{2\ell'-1} / I_o \cdot \cos\left\{n(2\ell' - 1)\theta\right\}$$

Then the flux linkage per unit length between the single block coil and its induced magnetic flux is given,

$$\varphi_n = \int_{-\pi}^{\pi} d\theta \sum_{\ell=1}^{\infty} \sum_{\ell'=1}^{\infty} \frac{\mu_o I^n_{2\ell-1}}{2n(2\ell-1)} \left\{ 1 + \left(\frac{R}{b}\right)^{2n(2\ell-1)} \right\}$$

$$\times\ I^n_{2\ell'-1}/I_o \cdot \cos\left\{ n(2\ell-1) \cdot \theta \right\} \cdot \cos\left\{ n(2\ell'-1)\theta \right\} \tag{A26}$$

$$= \sum_{\ell=1}^{\infty} \frac{\pi\mu_o \left(I^n_{2\ell-1}\right)^2}{2n(2\ell-1)} \left\{ 1 + \left(\frac{R}{b}\right)^{2n(2\ell-1)} \right\} / I_o \tag{A27}$$

The self-inductance L of the single block coil is given, (see equation (A8))

$$L = \sum_{\ell=1}^{\infty} L^n_{2\ell-1}$$

$$L^n_{2\ell-1} = \frac{\pi\mu_o (I^n_{2\ell-1}/I_o)^2}{2n(2\ell-1)} \left\{ 1 + \left(\frac{R}{b}\right)^{2n(2\ell-1)} \right\} \tag{A28}$$

$$= \frac{8\mu_o n N^2}{\pi(2\ell-1)^3} \frac{\cos^2[(2\ell-1)\theta_o]\ \sin^2[(2\ell-1)\delta\theta/2]}{(\delta\theta/2)^2} \times \left\{ 1 + \left(\frac{R}{b}\right)^{2n(2\ell-1)} \right\} \tag{A29}$$

As shown in equation (A26), from the orthogonal property of cosine function, the self-inductance L of this coil is the sum of $L^n_{2\ell-1}$ of each mode.

As for the special case, we consider about $\delta\theta \to 0$ case, that is δ-function type current distribution, where for simplicity we set $\theta_o = 0$, then from equation (A29),

$$L^n_{2\ell-1} \cong \frac{8\mu_o n N^2}{\pi(2\ell-1)^3} \cdot \frac{(2\ell-1)^2 \cdot (\delta\theta/2)^2}{(\delta\theta/2)^2} \left\{ 1 + \left(\frac{R}{b}\right)^{2n(2\ell-1)} \right\}$$

$$= \frac{8\mu_o n N^2}{\pi(2\ell-1)} \cdot \left\{ 1 + \left(\frac{R}{b}\right)^{2n(2\ell-1)} \right\} \tag{A30}$$

In this case the total self-inductance L

$$L = \sum_{\ell=1}^{\infty} L^{n}_{2\ell-1} = \frac{8\mu_0 n N^2}{\pi} \sum_{\ell=1}^{\infty} \frac{1 + \left(\frac{R}{b}\right)^{2n(2\ell-1)}}{(2\ell-1)} = \infty \tag{A40}$$

does not converge.

The explanation of this divergence of L is given following; The magnetic energy U_{mag} produced by a coil is given,

$$U_{mag} = \frac{1}{2} L I_0^2 \tag{A41}$$

On the other hand U_{mag} is also given by the following equation

$$U_{mag} = \frac{1}{2} \int \frac{B^2}{\mu} d\upsilon. \tag{A42}$$

In this δ-function type current distribution case, coil is made of infinite thick filament conductor, the magnetic flux density B on the filament conductor diverge to infinite and integral of B^2 also diverge to infinite. From the equation (A41) we get $L = \infty$ in this case.

This special case result makes us know that it is very important to take into account the width of winding coil for the calculation of self-inductance L.

The convergence of total self-inductance L for the finite coil width is guaranteed by following discussion, because a numerator of equation (A29) is

$$\cos^2[(2\ell-1) \cdot \theta_0] \cdot \sin^2[(2\ell-1) \cdot \delta\theta/2] \leqq 1,$$

then,

$$L < L_{max} = \frac{32\mu_0 n N^2}{\pi \delta\theta^2} \times \left\{ \sum_{\ell=1}^{\infty} \frac{1}{(2\ell-1)^3} + \sum_{\ell=1}^{\infty} \frac{\left(\frac{R}{b}\right)^{2n(2\ell-1)}}{(2\ell-1)^3} \right\}$$

where both sumation terms in right side converge.

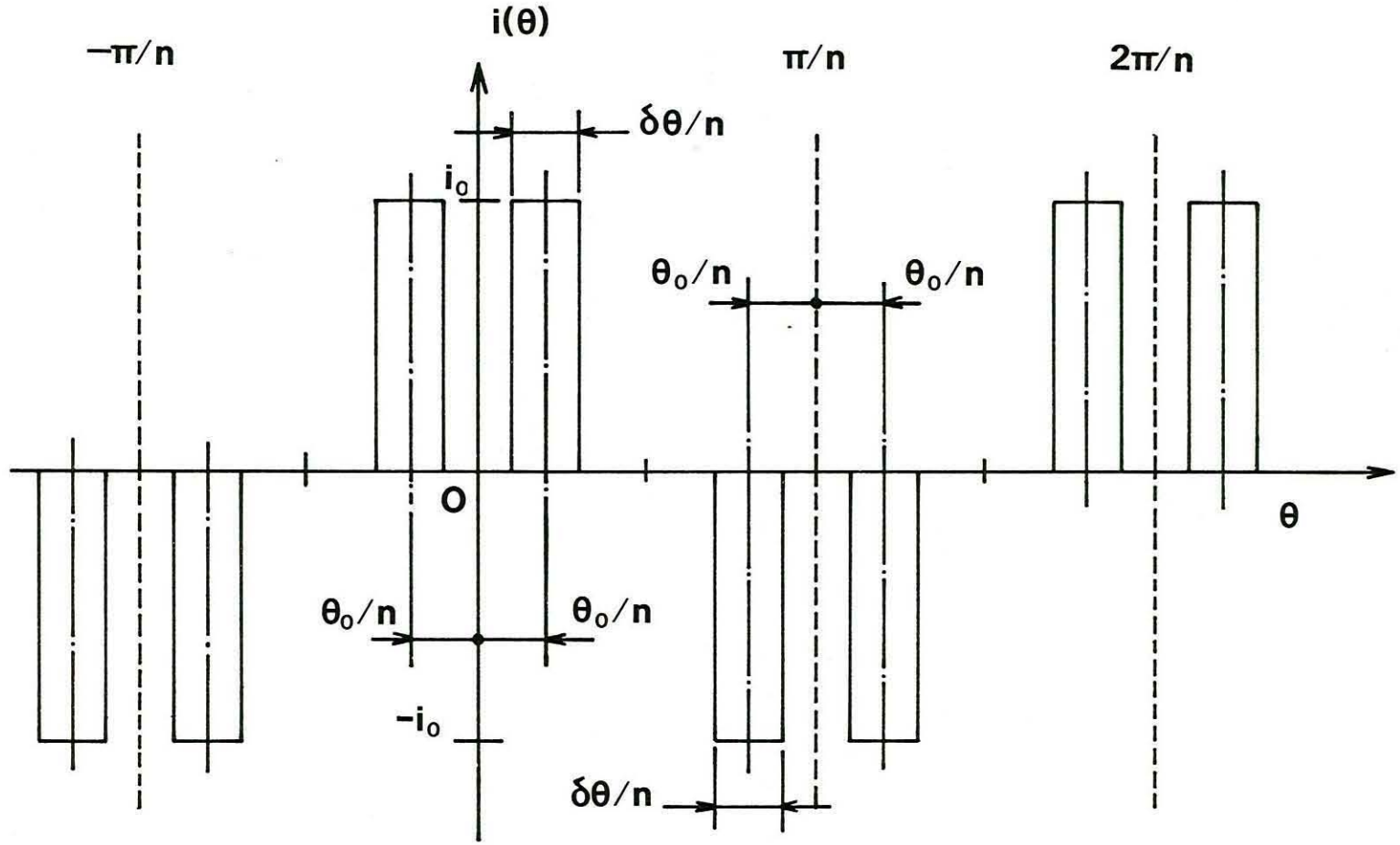

XBL 837-10503

Fig. A1

APPENDIX B

(a) Mutual-inductance M between two ideal coil windings .

We assume the two ideal current sheet in the iron ($\mu = \infty$) Yoke. Figure B1 shows the error coil (Coil 1) and self-correction coil (Coil 2) and the iron ($\mu = \infty$) Yoke.

The current distribution for error coil (Coil 1) is expressed,

$$i_1(\theta) = I_1 m\cos(m\theta) = mN_1 I_1 \cos(m\theta), \tag{B1}$$

where m is the multipolarity of this current distribution, N_1 is the total turn number of coil per pole and I_1 is the current in the coil.

The vector potential $A_z(r,\theta)$ produced by this current distribution is given.

$$A_z^m\ (r,\theta) = \frac{\mu_o I_1 N_1}{2} \left(\frac{r}{R_1}\right)^m \left\{1 + \left(\frac{R_1}{b}\right)^{2m}\right\} \cos(m\theta) \tag{B2}$$

Because the current distribution for self correction coil (Coil 2) is expressed as following,

$$i_2(\theta) = I_{2n}\cos(n\theta) = nN_2 I_2 \cos(n\theta) \tag{B3}$$

the coil turn number distribution $n_2(\theta)$ is given,

$$n_2(\theta) \equiv \frac{I_2(\theta)}{I_2} = \frac{I_{2n}}{I_2} \cdot \cos(n\theta) = nN_2\cos(n\theta) \tag{B4}$$

The flux linkage per unit length φmn between the magnetic flux produced by ideal coil 1 and ideal coil 2 is, for $R_2 < R_1$ case.

$$\varphi mn = \int_{-\pi}^{\pi} A_z(R_2,\theta) \cdot n_2(\theta)d\theta \tag{B5}$$

$$= \frac{\mu_o I_1 m N_1}{2m} \cdot \left(\frac{R_2}{R_1}\right)^m \cdot \frac{I_{2n}}{I_2} \int_{-\pi}^{\pi} \cos(m\theta) \cdot \cos(n\theta)d\theta \tag{B6}$$

$$= \begin{cases} 0 & (n \neq m) \\ \frac{\pi\mu_o}{2} \cdot \left\{1 + \left(\frac{R_1}{b}\right)^{2n}\right\} \cdot \left(\frac{R_2}{R_1}\right)^n \cdot nN_1N_2I_1 & (n = m) \end{cases} \tag{B7}$$

From the definition of mutual-inductance M,

$$\text{emf} = \dot{\varphi} = M\dot{I}. \tag{B8}$$

We can calculate the mutual-inductance per unit length M,

$$\boxed{M = \frac{\pi\mu_o}{2} \left\{1 + \left(\frac{R_1}{b}\right)^{2m}\right\} \left(\frac{R_2}{R_1}\right)^m \cdot m \cdot N_1N_2} \tag{B9}$$

From the discussion above we find that two coil coupled magnetically only when the multipolarity of both coils are the same.

(b) Mutual-inductance M between an ideal coil and a non-ideal coil.

We assume an ideal current sheet for outer error coil and a non-ideal inner self-correction coil. (See Figure B1). For the current distribution of error coil, we assume following ideal current distribution,

$$i_1(\theta) = mN_1I_1\cos(m\theta) \tag{B10}$$

The vector potential $A_z(r,\theta)$ produced by this ideal current distribution is

$$A_z^m(r,\theta) = \frac{\mu_o I_1 N_1}{2} \cdot \left\{1 + \left(\frac{R_1}{b}\right)^{2m}\right\} \cdot \left(\frac{r}{R_1}\right)^m \cos(m\theta) \tag{B11}$$

We assume the single block approximation coil for self-correction coil, from the equation (A22) the coil turn distribution is given,

$$n(\theta) = \sum_{\ell=1}^{\infty} \frac{I^n_{2\ell-1}}{I_0} \cdot \cos[n(2\ell-1) \cdot \theta] \tag{B12}$$

$$\frac{I^n_{2\ell-1}}{I_0} = \frac{4nN_2}{\pi(2\ell-1)} \cdot \frac{\cos[(2\ell-1)\theta_0] \sin[(2\ell-1)\delta\theta/2]}{\delta\theta/2} \tag{B13}$$

The flux linkage per unit length φ_{mS} between ideal error coil 1 and non-ideal self-correction coil (single block approximation coil) is given in the following equation:

$$\varphi_{mS} = \frac{\mu_0 I_1 N_1}{2m} \left\{ 1 + \left(\frac{R_1}{b}\right)^{2m} \right\} \left(\frac{R_2}{R_1}\right)^m$$

$$\times \sum_{\ell=1}^{\infty} \frac{I^n_{2\ell-1}}{I_0} \cdot \int_{-\pi}^{\pi} \cos(m\theta) \cdot \cos[n(2\ell-1)\theta] d\theta \tag{B14}$$

$$= \begin{cases} 0 & (m \neq n \text{ or } \ell \neq 1) \\ 2\mu_0 m N_1 N_2 \left(\frac{R_2}{R_1}\right)^m \cdot \frac{\cos\theta_0 \cdot \sin(\delta\theta/2)}{\delta\theta/2} & (m = n \text{ and } \ell = 1) \end{cases} \tag{B15}$$

From the orthogonal property of cosine function, the self-correction coil couples with the error field through the fundamental mode (ℓ=1) only. The mutual inductance M is given by the following equation,

$$\boxed{M = 2\mu_0 \left\{ 1 + \left(\frac{R_1}{b}\right)^{2m} \right\} \left(\frac{R_2}{R_1}\right)^m \cdot mN_1N_2 \cdot \frac{\cos\theta_0 \cdot \sin(\delta\theta/2)}{\delta\theta/2} \quad \text{(B16)}}$$