LBL-16421 c.2

Lawrence Berkeley Laboratory

UNIVERSITY OF CALIFORNIA

Physics, Computer Science & Mathematics Division

RECEIVED
LAWRENCE
BERKELEY LABORATORY

SEP 26 1983

LIBRARY AND
DOCUMENTS SECTION

Presented at the 8th International Conference on Magnet Technology, Grenoble, France, September 5-9, 1983; and to be published in Journal de Physique

ACTIVE CENTER TAP QUENCH PROTECTION

R.G. Smits, P.H. Eberhard, G.H. Gibson, M.A. Green, F. Kirsten, R.R. Ross, P. Salz, and J.D. Taylor

July 1983

TWO-WEEK LOAN COPY

This is a Library Circulating Copy which may be borrowed for two weeks. For a personal retention copy, call Tech. Info. Division, Ext. 6782.

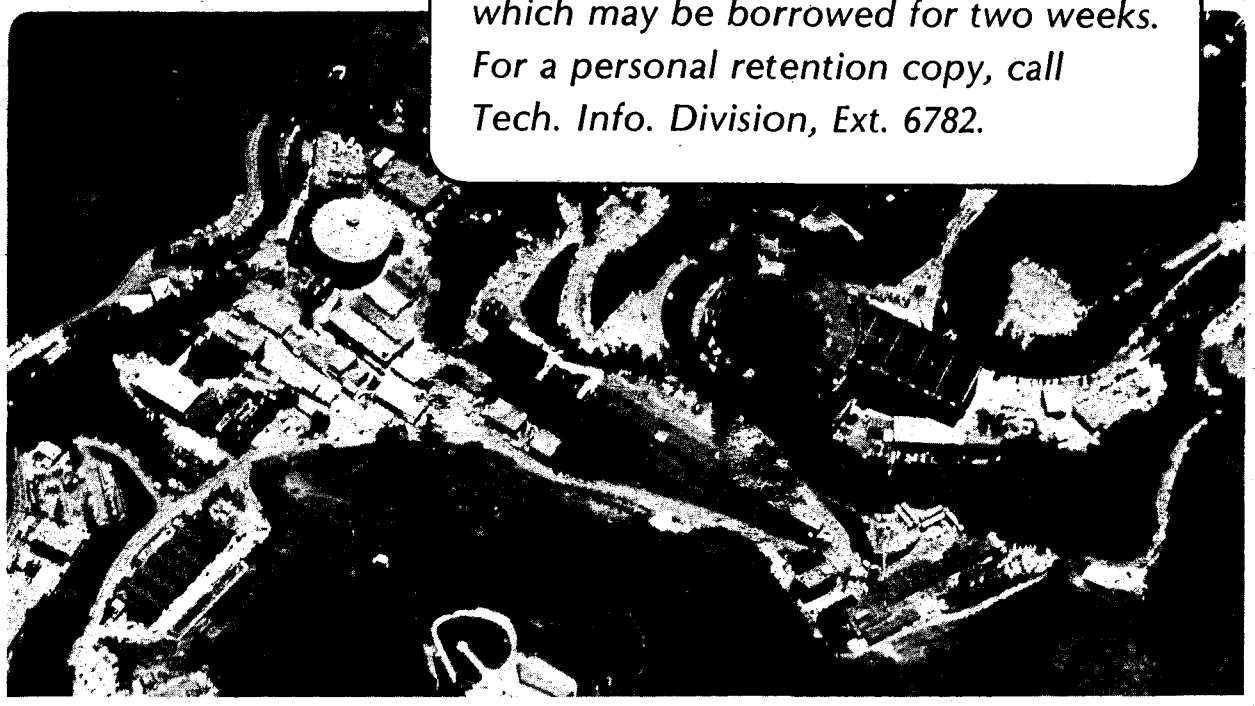

Prepared for the U.S. Department of Energy under Contract DE-AC03-76SF00098

LBL-16421 c.2

DISCLAIMER

This document was prepared as an account of work sponsored by the United States Government. While this document is believed to contain correct information, neither the United States Government nor any agency thereof, nor the Regents of the University of California, nor any of their employees, makes any warranty, express or implied, or assumes any legal responsibility for the accuracy, completeness, or usefulness of any information, apparatus, product, or process disclosed, or represents that its use would not infringe privately owned rights. Reference herein to any specific commercial product, process, or service by its trade name, trademark, manufacturer, or otherwise, does not necessarily constitute or imply its endorsement, recommendation, or favoring by the United States Government or any agency thereof, or the Regents of the University of California. The views and opinions of authors expressed herein do not necessarily state or reflect those of the United States Government or any agency thereof or the Regents of the University of California.

TPC-LBL-83-36

LBL 16421

Presented at the 8th International Conference on Magnet Technology
5-9 Sept. 1983, Grenoble, France

ACTIVE CENTER TAP QUENCH PROTECTION

R.G. Smits, P.H. Eberhard, G.H. Gibson, M.A. Green, F. Kirsten,
R.R. Ross, P. Salz, and J.D. Taylor

Lawrence Berkeley Laboratory
University of California
Berkeley, California 94720

July 1983

ACTIVE CENTER TAP QUENCH PROTECTION*

R.G. Smits, P.H. Eberhard, G.H. Gibson, M.A. Green, F. Kirsten,
R.R. Ross, P. Salz, and J.D. Taylor

ABSTRACT

The two-meter-diameter superconducting solenoid for the Time Projection Chamber (TPC) experiment is protected by an active quench protection system which discharges a capacitor into the center tap of the magnet. The energy stored in the capacitor is discharged between the two layers of the superconducting coil to drive it normal. Thus the magnet energy is deposited in the coil and its secondary circuits more uniformly. This paper describes the quench-protection method as used on the TPC magnet.

*This work was supported by the Director, Office of Energy Research, Office of High Energy and Nuclear Physics, Division of High Energy Physics of the U.S. Department of Energy under Contract No. DE-AC03-76SF00098.

I. Introduction

The 1.5 T superconducting solenoid magnet for the Time Projection Chamber (TPC) particle detector at PEP is about 2.2 meters in diameter by 3.3 meters long, and stores 10 MJ of magnetic energy. The coil operates at 2260 A with a current density of 600 A/mm^2 in the wire. The wire consists of Nb-Ti filaments in a rectangular copper matrix.

To prevent burnout during a quench, active quench protection is employed. A quench-detector, constantly monitoring the operating magnet detects that a small amount of superconducting wire has turned resistive, and triggers the protection system which injects a high current pulse into the center-tap of the coil causing enough heating to turn much of the solenoid normal. The protection system works by spreading the resistive region throughout the coil. The current is quickly reduced because the magnet also employs "shorted-secondary" windings. The stored energy is dissipated as heat within the cryostat.

An advantage of this system is that high voltages exist only during the time when the vacuum is cryogenically pumped (and, therefore, electrical breakdown in gases cannot easily occur) because the protection pulse lasts less than 20 milliseconds. This technique contrasts with systems which switch the magnet current into an external resistor and have high terminal voltages for longer times.

II. Magnet Characteristics

The center tap quench protection system is aided by the following special characteristics built into the coil. See Fig. 1.

1) The superconducting coil is wound in two layers, each with the same number of turns. The center-tap connection is made where the superconductor changes layers. Close inductive coupling results between the halves of the superconducting coil, which maximizes the current obtained from the pulser for a given voltage, and increases the heating so the superconductor will easily turn normal.

2) The high current density in the wire of the magnet reduces the heat capacity of the superconductor and, therefore, decreases the pulse current required to turn the coil normal.

3) Close inductive coupling to a shorted, low resistance pure copper winding (UPC) helps reduce the superconductor current after the protection pulse and minimizes the energy which must be dissipated in the superconducting coil after it turns normal.

4) The coil-form is a "shorted turn" of low resistivity aluminum and it will absorb most of the energy after the superconductor turns normal. It has enough heat capacity to prevent its final temperature from exceeding 200 K.

5) The TPC magnet operates in vacuum instead of a liquid helium bath. It is cooled by heat conduction to a heat exchanger tube carrying two phase helium. Therefore, the superconductuctor can be heated easily by the center-tap pulse.

6) Electrical insulation between all the layers provides sufficient spacing to withstand the voltage of the center tap pulse at cryogenic temperature even if the insulation is cracked.

III. Protection Circuit

Figure 2 shows schematically the essential features of the center-tap quench-protection system. An auxiliary power supply charges the capacitor bank (C) via a resistor (R) which protects the power supply during the pulse. The return connection is through the superconducting winding.

When the quench detector determines that some of the superconductor has turned resistive, it fires the SCR which discharges the capacitor's energy via diodes to both magnet leads delivering a negative 800-volt pulse to the center tap. If the protection circuit is fired when no current is flowing in the coil, the protection current is approximately equally (1.2 to 1 ratio) divided between the two layers. If current is flowing in the coil, the protection pulse increases the current in one layer and decreases it in the other. The net effect is a large change in magnetic field between the windings and virtually no change in the magnetic field anywhere else. The field change heats the superconductor and the copper matrix of the superconducting wire.

There is 800 V on the electrolytic capacitor bank. The capacitor bank consists of 360 capacitors in groups of four capacitors in series-forward polarity so they operate at only 200 V each but charge backward during the last half of the pulse. The sustained very low polarizing voltage is predicted to enhance their lifetime and the brief reverse charging is not harmful.[1] The final rating of the entire capacitor bank would then be 36 mf (measured 43 mf) at 1800 V. The air core inductor L in Fig. 2, together with the total resistance of the circuit, limits the rate of increase of current to 33 A/us and the peak current to 8000 A, the ratings for the SCR. There is also an SCR limit for $\int i^2\,dt$ in the SCR $< 265000\ A^2s$.

Finally, it is necessary to protect the magnet from fast voltage transients that might otherwise produce large turn-to-turn voltages. The two r-c filters between the center tap and the coil-end connections smooth the initial firing pulse. Other small capacitors across the coil terminals intercept higher frequency components that cannot be stopped by the r-c filters which, because of their size, are too far away.

IV. Results of the Coil Test Without Iron

During the first testing phase of the TPC solenoid, the coil was operated with the protection circuit of Fig. 2. The quench protection did not trigger when the coil was powered at full current but a spurious triggering of the quench-protection system at 97% of design current (without an actual quench) gave us the data for Figs. 3-5.

Figure 3 shows the current pulse from the center tap lasting less than 20 ms. The peak current is only 2300 A and the $\int i^2\,dt$ is 28700 A^2s.

Figure 4 shows that the negative pulse to the coil center-tap (with normal magnet polarity) increases the current through the inner layer of the coil. The inner layer turns normal before its current reaches the critical current. It remains normal because of joule heating of the wire

by the magnet current. The outer layer turns partially normal by eddy-current heating, and later entirely normal by heat conduction from the inner layer. When the superconductor turns normal, the total magnet flux drops slightly, inducing currents in the UPC and the coil-form. Just after the pulse, the UPC ampere-turns increase most because the UPC L/R time-constant is longest. Later, when the UPC warms up, its resistance rises causing a decrease in UPC current and an increase in the coil-form current.

Figure 5 shows where the energy is deposited throughout the various windings of the coil package. The hottest possible spot in the superconductor can be no warmer than 200 K because the $\int i^2\,dt$ from 20 ms before the time of firing of the protection system to time of zero current was only 0.9×10^6 A^2s . The extra 20 ms is included to simulate the time required for quench detection to occur.[2]

Essential parts of the active quench protection system, not covered by this report, include the quench detector, non-interruptable power for the quench-detection/protection systems, and safety interlocks for personnel protection.

Acknowledgments

The authors are indebted to the SLAC refrigeration crew for quench-proofing the liquid helium system, to Kevin Derby for data gathering and analysis programs, and to Frank Petro for electronic installation.

References

1. HOPKINS,D.B., IRE Trans. on Nuclear Science NS.9:NO.2 April 1962 UCRL 9968.

2. EBERHARD, P.H. et al., Nuclear Instruments and Methods 158 (1979) 33-40. & Methods 158 (1979) 33-40.

FIGURE CAPTIONS

Fig. 1 Cross-section view of the TPC Magnet coil package showing its construction.

Fig. 2 Power circuit and quench protection circuit for the TPC magnet.

Fig. 3 The current pulse and $\int i^2 \, dt$ of that pulse for the TPC magnet quench protection system.

Fig. 4 The distribution of the magnet current in the superconducting coil, the ultra pure copper circuit (UPC), and the bore tube as a function of time after the quench protection system fires (starting magnet current io = 2197 A).

Fig. 5 The energy distribution within the superconducting coil, the ultra pure copper circuit (UPC) and the bore tube as a function of time after the start of the quench (io = 2197 A).

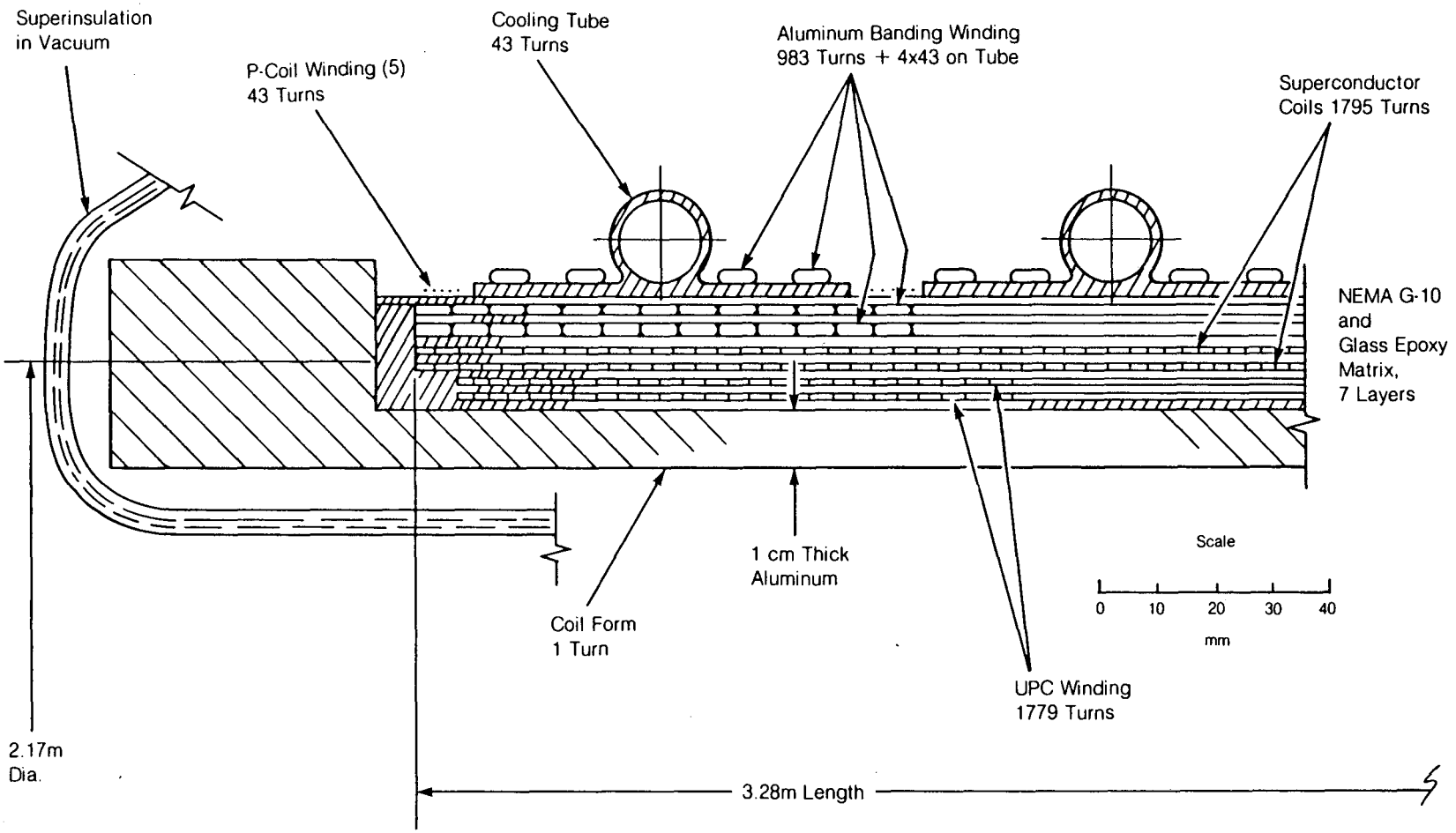

XBL 837-808

Fig. 1

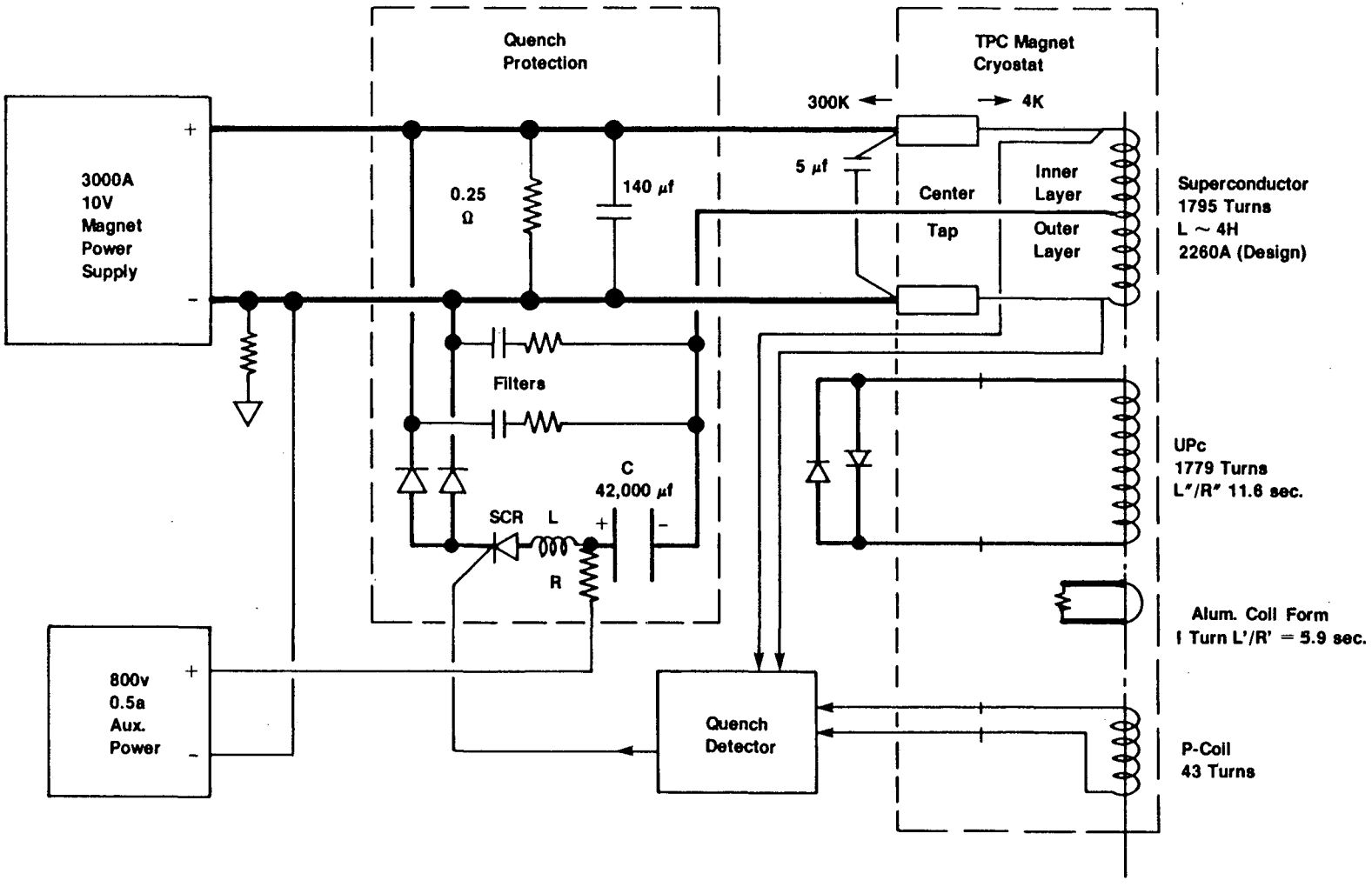

XBL 837-809

Fig. 2

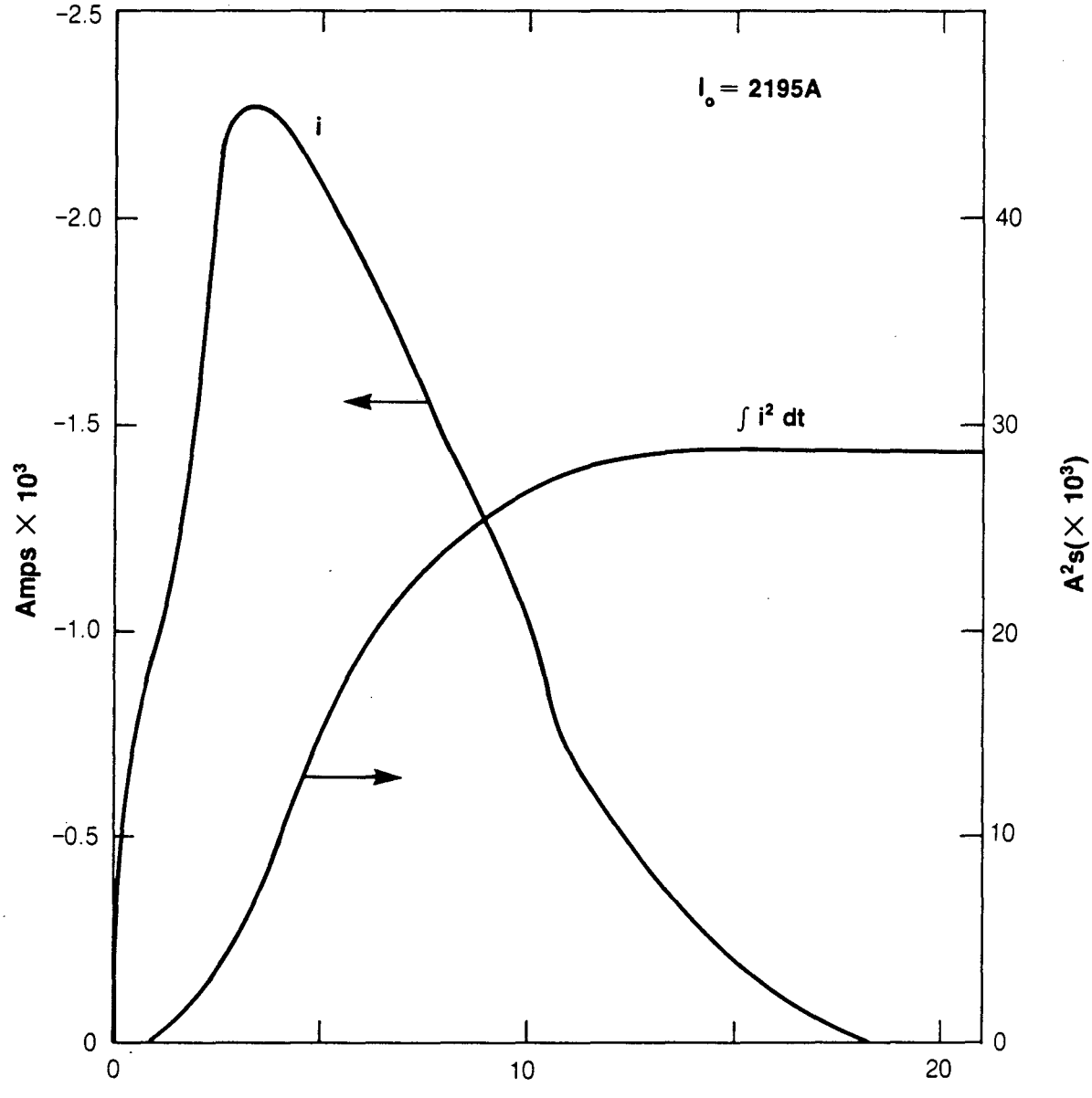

XBL837-805

Fig. 3

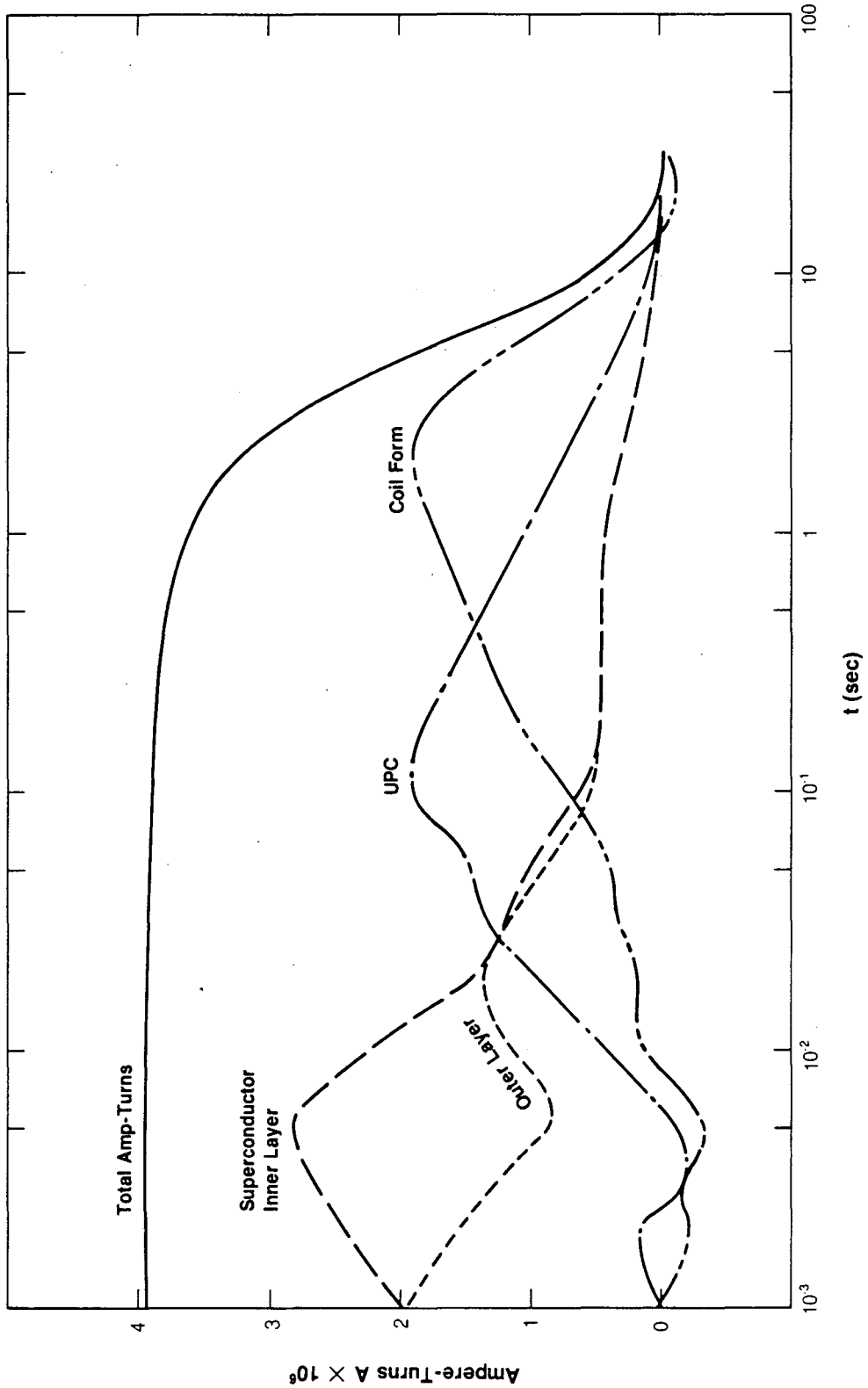

XBL 837-806

Fig. 4

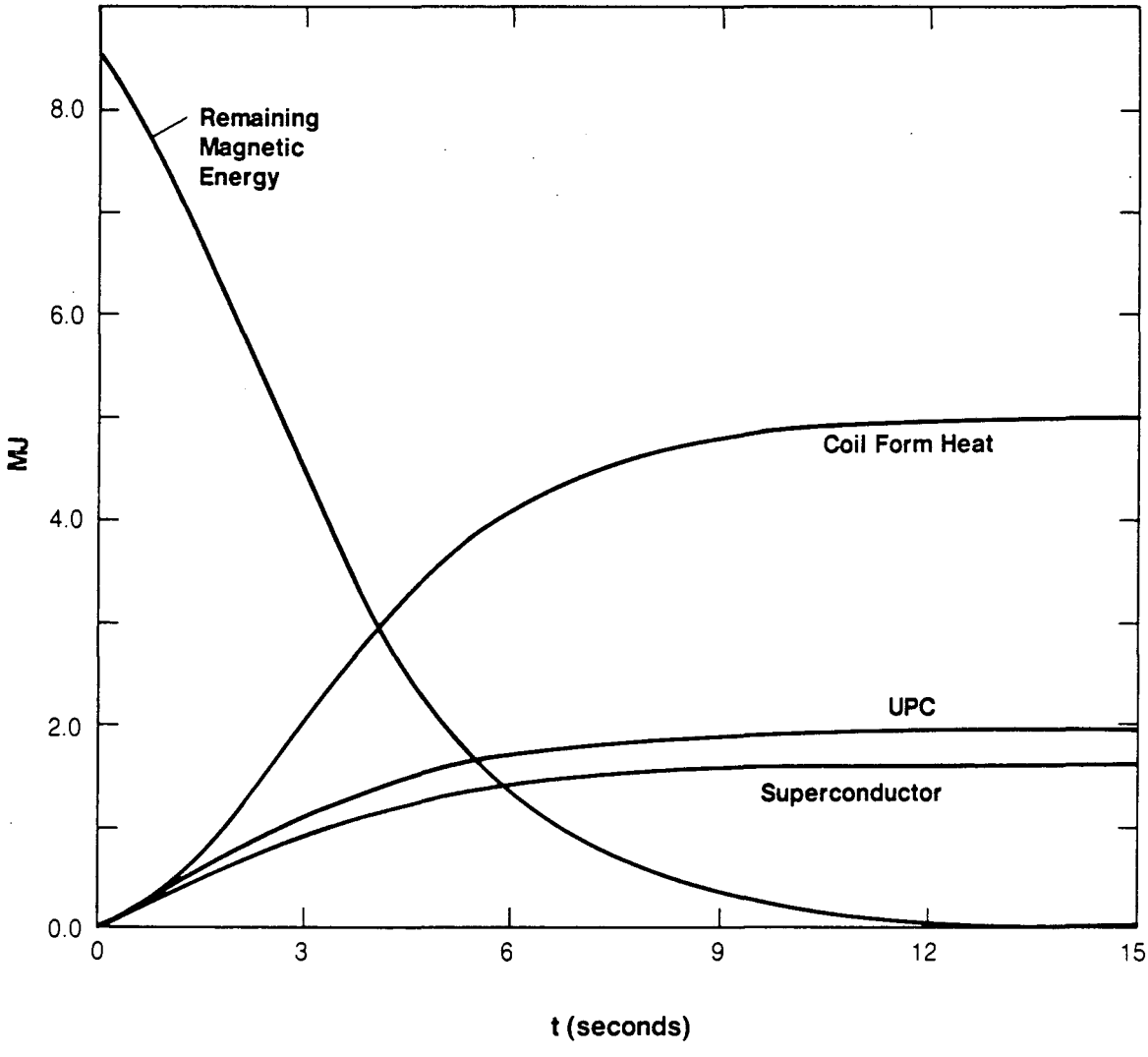

XBL 837-807

Fig. 5

This report was done with support from the Department of Energy. Any conclusions or opinions expressed in this report represent solely those of the author(s) and not necessarily those of The Regents of the University of California, the Lawrence Berkeley Laboratory or the Department of Energy.

Reference to a company or product name does not imply approval or recommendation of the product by the University of California or the U.S. Department of Energy to the exclusion of others that may be suitable.

TECHNICAL INFORMATION DEPARTMENT
LAWRENCE BERKELEY LABORATORY
UNIVERSITY OF CALIFORNIA
BERKELEY, CALIFORNIA 94720