LBL-16783
UC-38 c.2

Lawrence Berkeley Laboratory

UNIVERSITY OF CALIFORNIA

RECEIVED
LAWRENCE
BERKELEY LABORATORY
MAR 12 1984
LIBRARY AND
DOCUMENTS SECTION

APPLIED SCIENCE DIVISION

FREEZING IN RESIDENTIAL AIR-TO-AIR HEAT EXCHANGERS: AN EXPERIMENTAL STUDY

W.J. Fisk, K.M. Archer, R.E. Chant, D. Hekmat,
F.J. Offermann, and B.S. Pedersen

September 1983

TWO-WEEK LOAN COPY

This is a Library Circulating Copy which may be borrowed for two weeks. For a personal retention copy, call Tech. Info. Division, Ext. 6782.

APPLIED SCIENCE DIVISION

Prepared for the U.S. Department of Energy under Contract DE-AC03-76SF00098

LBL-16783 c.2

DISCLAIMER

This document was prepared as an account of work sponsored by the United States Government. While this document is believed to contain correct information, neither the United States Government nor any agency thereof, nor the Regents of the University of California, nor any of their employees, makes any warranty, express or implied, or assumes any legal responsibility for the accuracy, completeness, or usefulness of any information, apparatus, product, or process disclosed, or represents that its use would not infringe privately owned rights. Reference herein to any specific commercial product, process, or service by its trade name, trademark, manufacturer, or otherwise, does not necessarily constitute or imply its endorsement, recommendation, or favoring by the United States Government or any agency thereof, or the Regents of the University of California. The views and opinions of authors expressed herein do not necessarily state or reflect those of the United States Government or any agency thereof or the Regents of the University of California.

LBL-16783
EEB-Vent 83-19

FREEZING IN RESIDENTIAL AIR-TO-AIR HEAT EXCHANGERS: AN EXPERIMENTAL STUDY

William J. Fisk, Keith M. Archer, Raymond E. Chant,
Dariusch Hekmat, Francis J. Offermann,
and Brian S. Pedersen

Building Ventilation and Indoor Air Quality Group
Lawrence Berkeley Laboratory
University of California
Berkeley, CA 94720

September 1983

This work was supported by the Assistant Secretary for Conservation and Renewable Energy, Office of Building Energy Research and Development, Building Systems Division of the U.S. Department of Energy under Contract No. DE-AC03-76SF00098.

ABSTRACT

Mechanical ventilation of residences, with heat recovery in air-to-air heat exchangers, is an increasingly common practice. When this technique of ventilation is used in cold climates, however, freezing can occur in the air-to-air heat exchanger and substantially reduce its performance. A laboratory investigation was conducted to determine the indoor and outdoor environmental conditions that lead to freezing, the impact of freezing on performance, and the effect on performance of a common freeze protection strategy based on periodic defrosts. In experiments with three different models of air-to-air heat exchangers, the temperature of the inlet cold airstream at which freezing was initiated ranged from -3°C to -12°C and varied with the humidity of the inlet warm airstream. Freezing caused the temperature efficiency of a cross-flow heat exchanger to decrease at a rate that ranged from 1.5 to 13.2 percentage points per hour. Small rates of decrease in efficiency (0.6 to 2.0 percentage points per hour) resulted from freezing in a counterflow exchanger. The rate of decrease in efficiency depended on the airstream temperatures and humidities, and the duration of the period of freezing. The amount of time required to defrost the heat exchanger's core was 6 to 26% of the total operating time. The average temperature efficiency for freeze-defrost cycles ranged from 48 to 64 percent in tests of the cross-flow exchanger and 70 to 82 percent in tests of the counterflow exchanger. When the frequency and duration of defrosts were nearly optimal, approximately a ten to fifteen percentage point decrease in average temperature efficiency was attributed to the freezing and required defrosts. The results suggested that the rate of performance deteriorations due to freezing can be reduced by avoiding small airflow passages that can easily be plugged with ice and by designing the exchanger so that condensed water does not drain toward the cold regions of the core. Based on this investigation, suggestions are made for future experimental studies of freezing and for improved control of freeze-protection systems.

INTRODUCTION

In the past, ventilation of residences has occurred primarily by uncontrolled infiltration (i.e., leakage of air through cracks and other openings) and by ventilation through open windows. Local and periodic exhaust ventilation using fans has also been employed to some extent near concentrated sources of pollutants and humidity. In recent years, however, many homeowners and home builders have taken measures to reduce ventilation by infiltration. The motivation for these actions has been to reduce the energy requirements for heating or cooling. Reductions in the ventilation rate, however, often result in increased concentrations of indoor-generated air pollutants (National Academy of Sciences, 1981) including radon, formaldehyde, combustion products and humidity. If the rate of pollutant generation indoors is high and/or the ventilation rate is low, indoor pollutant concentrations may be high enough so that the comfort or health of the occupants is jeopardized. To maintain acceptable pollutant concentrations, mechanical ventilation systems that provide ventilation throughout the structure are now being employed with increasing frequency especially in energy efficient residences that are located in cold climates. These energy efficient residences generally have large amounts of thermal insulation and are constructed so that they have low infiltration rates. The use of mechanical ventilation in residences (i.e., ventilation with fans) permits better control of the ventilation rate, allows the locations of air supply and exhaust to be chosen so that pollutant concentrations can be controlled more efficiently, and makes it possible to recover energy from the exhausted ventilation air.

One increasingly utilized method of ventilating residences that incorporates energy recovery, is to use a residential mechanical ventilation system with an air-to-air heat exchanger (MVHX System). These systems supply outdoor air with a low concentration of indoor-generated pollutants to the residence and exhaust an equal amount of indoor air with a higher concentration of these pollutants. In the core of the heat exchanger, heat is transferred from the warmer airstream to the cooler airstream without mixing of the two airstreams; thus, the supply airstream is preheated in the winter and precooled in the summer before it enters the residence. The preheating or precooling of incoming ventilation air saves a significant percentage of the energy that would otherwise be lost when ventilation occurs without heat recovery.

A typical residential air-to-air heat exchanger (Figure 1) is actually a system that consists of a core where the heat is transferred between the airstreams, a pair of fans (one for each airstream), and an insulated case which contains the core, fans, and fittings for attachment to ducting. A duct system is installed so that air is withdrawn from various locations throughout the residence, and preheated or precooled outdoor air is supplied to other locations. Other air-to-air heat exchangers are designed for use without ductwork. They are installed through a wall or window, much like a window air conditioner is installed. The performance and economics of residential MVHX systems have been investigated in laboratory and field studies conducted by Lawrence Berkeley Laboratory and by researchers in Canada, Europe and Japan (see for example: Fisk and Turiel, 1983; Offermann et al., 1982; Svensson, 1982).

From an economic point of view, the use of MVHX systems is most attractive in regions with cold climates and in houses heated with expensive forms of energy. However, when it is sufficiently cold outdoors, moisture in the exhaust airstream can freeze within the core of the heat exchanger and the resulting accumulation of ice or frost can substantially reduce the amount of heat recovery (i.e., the amount by which the incoming air is preheated). A laboratory study of this problem of freezing in residential air-to-air heat exchangers has been conducted at Lawrence Berkeley Laboratory during the past two years. The objectives of this study were: 1) to determine the environmental conditions (indoor and outdoor) under which freezing occurs, 2) to determine the impact of freezing on heat exchanger performance, 3) to evaluate a common freeze protection strategy, 4) to identify significant performance changes during freezing that could, with a suitable control system, activate a freeze protection system, and 5) to gain experience in experimental evaluation of freezing that may be valuable for future studies.

Measurements were performed with three different models of heat exchangers. This paper provides background information on the problem of freezing, describes the measurement techniques employed for the study, and presents and discusses the results.

DISCUSSION OF FREEZING

Background:

In this paper the term "freezing" refers to the formation of both ice and frost on the heat transfer surfaces from existing condensate and the water vapor in the air. Freezing occurs commonly in the evaporator coils of refrigeration equipment and in other low-temperature systems. Freezing in evaporator coils has been studied more thoroughly than freezing in air-to-air heat exchangers, and simple techniques of freeze-protection are more readily available for evaporator coils (e.g., periodically directing hot refrigerant through the evaporator). In air-to-air heat exchangers that are used in mechanical ventilation systems freezing is a significant problem when outdoor temperatures are cold. Freezing reduces the amount of heat recovery, increases the pressure drop and reduces the flow rate of the exhausted airstream, and can interfere with the mechanical operation of rotary-wheel exchangers.

Onset of Freezing:

Freezing will occur if the temperature of a heat transfer surface, at some location within the core, is below $0^{o}C$ and also below the dewpoint temperature of the moist air in contact with the surface at that location. (The term "dewpoint temperature" is used in this paper to represent both dewpoint and frostpoint temperature.) If the temperature drop across the thickness of the plates that separate the airstreams is negligible (which is generally true), and the heat conduction along these plates parallel to the direction of flow is assumed negligible, the temperature of the heat

transfer surface is determined by the temperatures of the surrounding air and by the convective heat transfer coefficients. For this simple case, the surface temperature ($T_{s,i}$) at a point "i" within the core can be calculated from the equation

$$T_{s,i} = (h_{w,i}\ T_{w,i} + h_{c,i}\ T_{c,i})/(h_{w,i} + h_{c,i}) \qquad (1)$$

where: $h_{w,i}$ and $h_{c,i}$ are the convective heat transfer coefficients at point "i" for the warm and cold airstreams, respectively, and $T_{w,i}$ and $T_{c,i}$ are the corresponding bulk temperatures for the warm and cold air on each side of the heat transfer surface. (The "bulk temperature" is the average air temperature, across the flow channel, in the direction perpendicular to the surfaces.) If the convective heat transfer coefficients are not equal, the surface temperature will more closely approach the temperature of the air with the higher coefficient. Condensation may effectively increase the warm air's convective coefficient due to a roughening effect of the surface and, thus, increase the heat transfer surface temperature. However, the coldest surfaces are generally located where the cold air enters the core and the convective coefficient for the cold air may be significantly increased in this region due to entrance effects. These two factors, condensation and entrance effects, will counteract although one or the other may dominate in some situations. The relationships between airstream bulk temperatures, heat transfer surface temperatures, condensation and freezing are illustrated qualitatively in Figure 2 which shows the temperature profiles for a counterflow exchanger. The impact on surface temperature, of increases in the convective heat transfer coefficients due to condensation or entrance effects, is also illustrated. Measured temperature profiles in an actual counterflow exchanger under conditions with condensation are presented by Besant and Bugg (1982).

To determine if freezing will be initiated, the surface temperature must be compared to the local dewpoint temperature of the warm air. The dewpoint temperature at some location within the core can be lower than the dewpoint temperature of the air entering the exchanger because the air may be dehumidified as it passes through the core. In a sensible core (i.e., a core in which only heat is transferred between airstreams) dehumidification will occur if water condenses from the airstream; however, the dewpoint temperature of the warm air cannot be reduced to a value below $0^{o}C$ unless freezing occurs. In an enthalpy core (i.e., a core that permits transfer of both heat and moisture between airstreams), the moist air will be dehumidified by the water vapor transfer through the heat transfer surfaces or by the adsorption of water on hygroscopic surfaces. Therefore, in an enthalpy core, the dewpoint temperature of the warm air may be reduced below $0^{o}C$ if the inlet humidity is low and/or the water vapor removal rate is high. Thus, the temperature at the onset of freezing can be significantly lower for an enthalpy core compared to a sensible core.

Mechanisms of Freezing:

The following three different mechanisms of freezing in heat exchangers have been identified: 1) Water vapor within the air may condense on

cold surfaces. If the surface temperature is reduced or the condensate drains to a colder region of the core, the liquid water may freeze to ice. 2) If the dewpoint temperature of the moist air is below 0°C and the air contacts a sufficiently cold surface, a layer of frost will form on the surface. 3) If the air within the core is cooled below its dewpoint temperature, liquid droplets can form within the air and with further cooling the liquid droplets may freeze into a solid. With a sufficiently low dewpoint temperature, ice crystals may form directly within the air without the prior formation of liquid droplets. In either instance, the frozen material may adhere to the heat transfer surfaces.

Important Factors:

From the previous discussion it can be concluded that the inlet temperature and humidity of the exhaust (i.e., warm) airstream and the inlet temperature of the supply (i.e., cold) airstream should affect the onset and/or rate of freezing. The rate of freezing and the amount of heat transfer surface area over which freezing occurs should increase as the inlet cold stream temperature is reduced.

The impact of the humidity of the warm airstream is more complex. In many instances, a higher inlet humidity will lead to more condensation within the core and a smaller decrease in the warm airstream temperature. Furthermore, the condensation may increase the warm airstream's convective heat transfer coefficient with a corresponding increase in surface temperature. Thus, the temperature of the cold airstream at the onset of freezing will be reduced as the humidity is increased. However, this trend may be reversed if the humidity of the warm airstream is low. As mentioned above if the inlet dewpoint is below 0°C (or if the dewpoint is reduced to a value below 0°C within an enthalpy exchanger) the onset of freezing temperature will decrease with a decrease in the inlet humidity. Thus, a maximum temperature for the onset of freezing may be expected at some intermediate humidity. If freezing does occur, a faster rate of ice or frost formation would be expected with higher inlet humidities.

A number of factors related to the design of the heat exchanger will also affect the onset and/or rate of freezing. In a heat exchanger that has a higher temperature efficiency (defined later), the exhaust air will be cooled by a greater amount; therefore, freezing will generally occur at a greater rate and at higher inlet cold-stream temperatures.

Airflow geometry is also important. In an ideal counterflow the temperature distribution is one-dimensional (i.e., the temperatures vary only in the direction parallel to the air flow), while in an ideal cross-flow the temperature distribution is two-dimensional. Due to the different temperature distributions, colder surface temperatures will occur in a cross-flow core compared to a counterflow core with the same temperature efficiency and identical inlet air conditions. Thus, the temperature at the onset of freezing should be higher in cross-flow cores although it is possible that freezing may be limited to only the colder regions of the core. However, in many actual counterflow cores, the flow geometry deviates from true counterflow near the ends; thus, the differences between the onset of freezing in the two types of cores may be less than otherwise

indicated.

The direction of drainage of condensed water and the size of the airflow passages for the exhaust airstream are additional factors that can affect the rate of freezing. In cores where the condensed water drains to colder regions, the rate of ice formation may be increased and the cold ends of the flow passages may become obstructed more rapidly. Also, small passages are more easily obstructed with ice or frost. To minimize the size of their products, manufacturers of residential heat exchangers have often opted for "compact" core designs, where compactness is the ratio of heat transfer area to volume of the core. It may be advantageous to sacrifice some compactness in order to increase the size of flow passages for the exhaust airstream.

Other factors that may affect the onset and/or rate of freezing that deserve a brief mention are: 1) the method by which the core is installed in the case can affect the temperature of heat transfer surfaces because of heat conduction between the case and core, 2) in actual heat exchangers there will be some heat conduction parallel to the direction of airflow in the plates that separate the airstreams and this conduction will affect the surface temperatures, and 3) the airstream flow rates and the ratio between the flow rates of the two airstreams will also affect the temperatures within the core and thus the freezing process.

Methods of Freeze Protection:

A large number of freeze-protection techniques are used in commercial heat recovery systems. In this section we describe only the two freeze-protection techniques that are most commonly used for residential heat exchangers. Various methods for controlling the freeze-protection systems are discussed in a later section.

A common strategy is to defrost the exchanger periodically by interrupting the flow of the cold (supply) airstream. In general this is accomplished by turning off the supply-stream fan. The exhaust airstream continues to flow through the exchanger, warms up the core, and melts the accumulated frost or ice. After a period of time, the supply fan is turned on and normal operation resumes. During the defrost, air continues to be exhausted from the residence; thus, an equivalent amount of outdoor air must enter the residence. A portion of this outdoor air will enter through cracks and other openings in the building envelope - this air is therefore not substantially preheated before it enters the residence. Some air may also enter through the supply ductwork and the supply passages of the heat exchanger (where it will be preheated) if this path is not blocked during the defrost which is usually the case. For the defrost technique used in this experimental study, no cold air flowed through the exchanger during the defrosts.

The second common freeze protection technique for residential heat exchangers is to preheat the cold supply air sufficiently to prevent freezing before this air enters the heat exchanger's core. An electric resistance heater is generally used for the preheater. Preheating the air consumes electricity and also reduces the amount of heat recovery in the

exchanger, but the heat exchanger's operation is not interrupted by the freeze protection system.

Review of Previous Work:

This discussion of freezing in air-to-air heat exchangers is concluded by briefly reviewing previous work. Early work was conducted by staff of the University of Manitoba, who encountered freezing problems in a hospital installation of three rotary air-to-air heat exchangers with 3.7 m diameter, aluminum wire-mesh cores. The wheels were being operated below optimal rotational speed to reduce freezing and because of imbalances of the wheels caused by the freezing. Tests indicated that freezing was initiated with outside temperatures between -16°C and -26°C when the exhaust airstream's inlet relative humidity was between 25 and 30%. The University of Manitoba's staff performed additional tests in the laboratory with a hygroscopic-wheel exchanger (Ruth et al., 1975). In this exchanger the onset of freezing, determined by an increase in pressure drop for the exhaust airstream of 50 Pa, was highly dependent on the humidity of the exhaust airstream, and the humidity of the supply airstream could not be ignored. Freezing did not occur with supply stream inlet temperatures above -12°C. Supply temperatures as low as -26°C could be tolerated without freezing when the exhaust airstream had a temperature of 24°C and a relative humidity below 22%.

Following the work in Manitoba, Sauer et al. (1981) at the University of Missouri-Rolla determined the onset of freezing for a "counterflow pure-plate" heat exchanger. Numerous tests were conducted with an inlet exhaust stream temperature of 24°C. The onset of freezing linearly ranged from -23°C with an inlet exhaust stream relative humidity of 60% to -9°C with an inlet relative humidity of 30%. The criterion used to determine the onset of freezing was not given. These results agreed fairly well with tabulated data in the ASHRAE equipment handbook (American Society of Heating, Refrigerating, and Air Conditioning Engineers, 1983).

During the winter of 1980-1981, Lawrence Berkeley Laboratory (LBL) staff studied the performance of MVHX systems in nine occupied residences located in Rochester, New York (Offermann et al., 1982). The thermal performance of the heat exchanger in each residence was monitored for approximately a one-week period by measuring inlet and outlet airstream temperatures every half hour. Occasional checks for freezing were also made visually. Freezing was observed in the cores of both a counterflow and a crossflow heat exchanger. The onset of freezing, as indicated by rapid deterioration in heat exchanger performance, was approximately -8°C for both exchangers. The indoor relative humidities during the study were in the range of 30 to 40%.

LBL staff also participated in monitoring the performance of a counterflow heat exchanger installed in a Minnesota residence. The onset of freezing, determined by performance measurements and periodic visual measurements, was approximately -7°C with an indoor relative humidity of 30%. Rapid and substantial deterioration in heat exchanger performance was observed during this unpublished study.

In addition to the experimental studies, Rostami (1982) completed a Ph.D. dissertation on condensation and frosting in air-to-air heat exchangers. His dissertation includes a review of previous work on frost formation on uniform-temperature flat plates, development of an improved model for frost growth rate, and use of the model to predict the performance of a parallel-flow heat exchanger under conditions with frosting.

EXPERIMENTAL SYSTEM

Overview:

Experiments to study freezing in residential air-to-air heat exchangers were conducted in a research laboratory with facilities for simultaneously producing warm and cold air with temperatures and humidities representative of the indoor and outdoor environments. Measurements of the flow rate, temperature, humidity, and static pressure of the airstreams entering and exiting the exchanger were used to determine performance. A description of the test and measurement systems is provided below.

Environmental Control of Air:

The cold airstream flowed in a closed loop through the heat exchanger and conditioning equipment. Air returning from the exchanger was dried as it passed through a desiccant dehumidifier, which also contained a fan. The dried airstream then passed through two cooling coils, where it gave up heat to a chilled brine. The chilled air then returned to the exchanger through an insulated duct. The minimum attainable air temperature was approximately -12°C for the majority of the test program, although, procurement of a low-temperature brine chiller permitted a few experiments to be performed with inlet air temperatures of -21°C.

The flow of warm air through the exchanger was provided by the fan for this airstream within the exchanger. This air was withdrawn from and returned to a chamber in which the temperature and humidity were controlled to match typical indoor conditions. This open-loop configuration without an auxiliary fan was chosen to ensure that the reduction in flow rate of the warm airstream during our tests was representative of the reductions that would occur due to freezing when the exchanger is operating in a residence. To maintain the desired temperature in the chamber, the chamber air was continuously recirculated through an air conditioner and an electric heater controlled by a proportional temperature controller. Temperature was generally maintained within 0.5°C of the desired value although larger deviations occurred occasionally and some test data were rejected due to poor temperature control. To control humidity, the chamber air was passed through a dessicant dehumidifier and steam was continuously injected into the chamber through a manually adjusted valve. In addition, a specially fabricated humidity controller, using the signal from a humidity probe, controlled the opening and closing of a solenoid valve to inject additional steam as required. Relative humidity (RH) was generally maintained stable within ± 3% RH for tests at 30% and 40% RH and within ± 5.5% RH for tests at 55% RH.

Measurement System:

Temperature: Air temperature was measured in the insulated ducts adjacent to the inlet and outlet fittings of the heat exchanger. A pair of air mixing vanes, upstream of each measurement location ensured that the air temperature was uniform within approximately 0.25°C at the measurement location. A thermolinear thermistor component (Yellow Springs, probe no. 705) was placed in the center of each duct and connected to a bridge circuit. The output voltage from the circuit was read by a microcomputer system. A grid of five copper-constantan thermocouples at each location, connected to a micro-voltmeter (Doric Scientific No. 400D) was read manually once during each test and served as an alternate measurement system. The thermolinear probes were calibrated twice at multiple temperatures during the measurement period by comparison to precision thermometers. The thermocouple system had been calibrated twice prior to this study by comparison to a platinum resistance thermometer that is traceable to the National Bureau of Standards. Based on the daily comparisons between the thermocouples and the thermolinear probes, small corrections (generally 0.1 to 0.3°C) were made to the probe readings during final data analyses. The estimated accuracy of the temperature measurements is ± 0.25°C.

Flow Rate: The flow rates of the airstreams were measured with orifice plate flow meters. The pressure difference between the pressure taps upstream and downstream of the orifice plates was sensed by an electrical pressure transducer (MKS Baratron, Type 220A) and the output signal from the transducer was read by the microcomputer system. The pressure transducer was calibrated at multiple pressures twice during the measurement period using a micromanometer with a sensitivity of 0.5 Pa (Dwyer Instruments Microtector). For each test the differential pressures were also determined manually once using the micromanometer. The estimated accuracy of the flow rate measurements using a procedure specified by the American Society of Mechanical Engineers (1971) is approximately ± 2%. As a check on measurement accuracy, the mass flow rate of all air entering the heat exchanger was compared to the mass flow rate of all air exiting the exchanger and the difference was generally less than 2 to 3%.

Humidity: The humidity (dew point temperature) of the warm airstream was measured both upstream and downstream of the heat exchanger. The dew point temperature of the cold airstream was generally less than -18°C and was only measured occasionally. The dew point probes used for this study (Yellow Springs, No 9102) utilize a thermolinear thermistor temperature sensor surrounded by a lithium chloride bobbin and were connected to a bridge circuit. The output voltages from the circuit were read by the microcomputer. The temperature sensor in each probe was calibrated by the method previously described for air temperature probes. During each test, humidity was also measured once at each location using precision wet and dry bulb thermometers. For the inlet warm airstream, the difference between the dewpoint, calculated from wet and dry bulb measurements and that from the lithium chloride probes, was as great as 1.5°C for a few tests but was generally between 0.5 and 1.0°C. In the final data analysis, the measured dewpoints were corrected to the extent possible using the wet and dry bulb measurements; however, the estimated uncertainty in the final calculated dewpoints is still on the order of ±1.0°C which causes approximately a ±3% uncertainty in inlet relative humidity. The humidity probe in the outlet warm airstream gave erratic results during some of the tests.

This airstream was nearly saturated with water vapor during many of the tests and condensation of water on the probes may have caused the measurement problems. Since the accuracy of the dewpoint probes was less than desirable (some of this inaccuracy may have been due to their long time constant), for the final few tests they were replaced by capacitance-type relative humidity probes (Humicap HMP23U), that were calibrated by comparison to an instrument that uses a chilled mirror to sense dewpoint temperatures (EG&G Environmental Model 911). However, this type of probe also gave poor results when placed in the nearly saturated outlet air.

Microcomputer: The microcomputer (Intel 8020) was controlled by a BASIC program. Four channels of data were read in sequence - each channel consisting of all signals for an airstream (e.g., the signals from sensors for temperature, pressure, humidity, and flowrate of the inlet warm airstream constituted one channel). After cycling through the four channels, the zero reading of the two pressure transducers was checked automatically. A complete cycle was completed every five minutes. The computer controlled the opening and closing of solenoid valves so that the pressure tranducers sensed the appropriate differential and static pressures.

Data Processing: Substantial data processing was performed by the BASIC program loaded into the microcomputer system (e.g., calculations of flow rates, temperatures, pressures, dewpoint temperatures, relative humidities, mass balance, etc.). The processed and unprocessed data were printed on paper and recorded on magnetic tape. Using a larger computer system, computer generated plots were prepared for each test and further calculations were performed.

EXPERIMENTAL PROTOCOL

The test performed can be divided into the following distinct groups: (1) tests to determine the temperature of the inlet cold airstream at which freezing was initiated (i.e., the onset of freezing), and (2) tests to determine the heat exchanger's performance during periods with freezing and periodic defrosts. The procedures for the tests are described below.

Onset of freezing tests: To determine the onset of freezing, the temperature and relative humidity of the warm airstream entering the exchanger were established at approximately 20°C and 30, 40, or 55% RH. (To determine the onset of freezing of the Flakt exchanger, tests were performed at 25% RH instead of 30% RH.) The temperature of the cold airstream entering the exchanger was adjusted, using an electric heater so that it equalled the desired value. Damper valves were adjusted so that the mass flow rate of the two airstreams were approximately equal (i.e., within 10%). The flow rates chosen for the tests were approximately 210, 190, and 130 kg/h for tests of the Flakt, Air Changer, and Mitsubishi exchangers, respectively. (The exchangers are described later.) Static pressures were adjusted to minimize leakage of air between airstreams. Conditions were maintained stable for up to six hours. The face of the heat exchanger's core, where the exhaust airstream exits the core, was periodically inspected for frost or ice through small windows installed in the case. If frost or ice was not visible after six hours we designated the test as one without freezing, and if ice or frost was visible, we designated the test as one with freezing.

For onset of freezing tests of the Flakt exchanger, which were completed before our test system became partially automated, the waiting period was only 5, 4 1/2, and 4 hours respectively for tests at 25, 40, 55% relative humidity. Freezing appeared to occur more rapidly in this exchanger; however, it would have been preferable to wait for six hours as in tests of the other units.

It should be noted that a visual observation of frost or ice always preceded any definitive changes in performance attributable to freezing. Small (a few percent) changes in static pressures and small reductions in the flow rate of the warm airstream were considered to be unreliable as indicators of freezing, because a build-up of condensate within the core could have been the cause of these changes. It may also be noted that these tests did not determine whether the freezing would progress sufficiently to cause a substantial reduction in performance. The choice of a visual criterion for the onset of freezing is further discussed later in this paper.

Freeze-defrost cycles: Tests were conducted during which the heat exchanger was periodically defrosted. The elapsed time between defrosts designated as the "duration of the freeze" was a test variable and equaled roughly 1, 2, 4, 6 hours or overnight. The temperature and relative humidity of the inlet warm airstream was maintained at approximately 20°C and 30, 40, or 55% respectively. At the beginning of the freeze-defrost cycles, the airstream flow rates were balanced and equal to approximately 200 kg/h. (Here, we are referring to the flow rates of the airstreams as they exit the heat exchanger. Inlet and outlet flow rates were slightly different because of leakage between the two airstreams. The net amount of leakage in the Flakt and Air Changer heat exchangers, respectively, was roughly 1% and 5% of the flow rate.) At the beginning of each cycle, the temperature of the inlet cold airstream decreased rapidly (as the ductwork upstream of the heat exchanger cooled) after which this temperature remained fairly stable at approximately -12°C for the majority of tests and -21°C for a few tests.

Because initial conditions (e.g., amount of moisture in the core) can have a significant effect on the rate of freezing, freeze-defrost cycles less than 6 hours in duration were repeated two to six times in succession. Data from the last cycle or pair of cycles should be largely unaffected by initial conditions, and it is these data that are presented later in this paper. Freeze-defrost cycles of more than six hours duration could not be repeated in succession during a workday, since the defrosts were manually controlled. Tests with a six hour duration of freeze were preceded by approximately two hours of freezing and a defrost. Overnight tests were preceded by either the defrost from a previous test of shorter duration or several hours of operation with the inlet temperature of the cold stream maintained at 0°C. The defrosts were initiated manually by turning off the heat exchanger's cold-airstream fan and adjusting valves so that the cold airstream bypassed the exchanger. The defrost was allowed to progress until complete as determined by a visual observation of the core. The criteria for the end of a defrost were that all visible ice and frost had melted and that rapid dripping of water from the core had decreased abruptly. Previous to establishing this criteria, we attempted to use the flow rate of the warm airstream (which increased throughout the defrost) as the criterion to end the defrost. This criterion did not always corre-

late well with visual observations and yielded fairly non-repeatable results - so it was rejected.

THE HEAT EXCHANGERS

Tests were performed with two different residential heat exchangers plus the core from a third exchanger. The three exchangers were of substantially different design, therefore, it was expected that the onset and rates of freezing for the units might differ significantly.

Flakt RDAA-2-0-1 heat exchanger: The first heat exchanger tested was manufactured by Flakt of Stockholm, Sweden and was obtained through Flakt Products Inc., Fort Lauderdale, Florida. The exchanger (Figure 3) consists of a crossflow aluminum core, two aluminum mesh filters, and two centrifugal fans mounted in an insulated case with fittings for attachment to ductwork. The parallel plates in the crossflow core are separated by aluminium fins that divide the space between the plates into small triangular passages. The cold airstream flows through the core in an upward direction (45° from the horizontal) and the warm airstream flows downward (also 45° from the horizontal). Any water that condenses in the core drains downward in the direction of airflow toward the colder end of the core. Before testing this exchanger, an effort was made to seal between the core and the case in order to minimize leakage between airstreams. During previous testing, of an identical exchanger at LBL under conditions with no condensation or freezing within the core and no operation of the heat exchanger's fans, the supply stream temperature efficiency (defined later) was approximately 63% for the flow rate in our tests. The efficiency was higher in the present tests, because of heat released during condensation and from the fan motors.

Air Changer Deluxe Series 01000 heat exchanger: The second heat exchanger tested was manufactured by the Air Changer Company LTD., London, Ontario*, Canada. This exchanger (Figure 4) consists of a polypropylene counterflow core and two axial fans mounted in an insulated case with fittings for attachment to ductwork. The cold airstream enters and exits the ends of the rectangular core. The warm airstream enters the top of the core through a series of slots at one end, and exits from the bottom of the core through a series of slots at the opposite end. As with most plate-type heat exchangers, the core is essentially a series of parallel plates with portions of each airstream directed through alternate passages. In this exchanger, the passages for the cold airstream are further subdivided into small rectangular channels while the passages for the warm airstream are not subdivided. Due to the unique design of this heat exchanger, much of the water that condenses within its core drains against the direction of airflow to the warmer end of the core. (The manufacturer asked us not to disclose details regarding the exchanger's design.) The unit tested was one of the first produced by the manufacturer and considerable sealing was

*The reader should be aware that the designs described here are copyright and subject to U.S. patent application and that a Canadian patent has been issued in respect of all the claims made by the inventors.

required to decrease the rate of air leakage between airstreams. The manufacturer indicates that this leakage problem has been corrected and that this particular exchanger is no longer in production but that similar models are available. Product literature indicates that the temperatures efficiency of this heat exchanger is roughly 90% for the flow rate in our tests.

Mitsubishi VL-1500 core: The third product tested is a heat exchanger core (Figure 5) from the Mitsubishi VL-1500 heat exchanger (Mitsubishi Electric Sales America Inc., Compton, CA). This crossflow core is constructed from a treated paper and water vapor is transferred directly through the paper surfaces from the more humid to the less humid airstream. The exact mechanism for the moisture transfer is not specified. The heat exchanger is designed for installation through a wall or window and; therefore, has no provisions for attachment to ductwork. For testing, the core was removed from the exchanger and installed in a sheet metal housing that could easily be connected to ductwork. In the tests, the warm airstream flowed in an upward direction (45° from the horizontal) and the cold airstream flowed in a downward direction (45° from the horizontal). The same flow configuration is employed in the Mitsubishi heat exchanger. Condensed water drained against the direction of airflow toward the warmer end of the core. This core was chosen for evaluation because of its capability to transfer moisture. By reducing the dewpoint temperature of the warmer air, the transfer of moisture may reduce the inlet cold stream temperature at which freezing is initiated. Moisture transfer should also reduce the rate of ice or frost formation. Our tests with this core were limited to a determination of conditions at the onset of freezing.

CALCULATED PERFORMANCE PARAMETERS

A description of the most important parameters calculated from data obtained during freeze-defrost cycles is provided below.

Airstream properties: The average, maximum, and minimum value of the temperature and mass flow rates of the airstreams entering and exiting the heat exchanger were determined excluding data from the defrost portion of the freeze-defrost cycles. For the entering and exiting warm airstream, the average, maximum, and minimum value of humidity ratio (i.e., mass of water vapor divided by mass of dry air) and relative humidity were also determined.

Temperature efficiency and rate of change of temperature efficiency: For each cycle of data, consisting of a measurement for all four airstreams, the temperature efficiency for the supply airstream (i.e., the airstream that would be supplied to the residence) was calculated from the equation

$$\varepsilon = \frac{T_{c,o} - T_{c,i}}{T_{w,i} - T_{c,i}} \times 100\%, \qquad (2)$$

where: T is an airstream temperature, and subscripts c, w, i, and o refer to the cold airstream, the warm airstream, inlet and outlet, of the heat exchanger, respectively. This efficiency equals the temperature rise of

the cold airstream divided by the theoretical maximum temperature rise and in theory can range from zero to unity. (Actually, if some heat source such as a fan motor, is located between the upstream and downstream measurement points, the efficiency as defined above can exceed unity.) An increase in efficiency corresponds to a decrease in the heat load imposed on the home's heating system; therefore, it is desirable for the efficiency to be as high as possible.

As ice or frost forms in the core of the heat exchanger, the temperature efficiency decreases. The average rate of change of efficiency for a freeze cycle, $\Delta\varepsilon$, which is a measure of the rate of performance deterioration, was calculated from the equation

$$\Delta\varepsilon = (\varepsilon_3 - \varepsilon_n)/(t_n - t_3) \qquad (3)$$

where: ε_3 is the value of ε calculated from data recorded during the third five-minute data interval after completion of the previous defrost, ε_n is calculated from data taken in the last interval prior to initiating the next defrost, and t_3 and t_n are the corresponding times. The value of temperature efficiency from the third data interval was used in the calculation because the first one or two values were often abnormally high due to heat storage in the core during the previous defrost. The time-weighted average temperature efficiency (ε_{avg}) for the entire freeze-defrost cycle (or pair of consecutive cycles) was also calculated, assuming that ε equalled zero during the defrost.

Rate of change of mass flow rate: The mass flow rate of the warm airstream was reduced as ice or frost formed within the core. The rate of change of mass flow rate (ΔM), is another indicator of the impact of freezing on performance, and was calculated from the equation

$$\Delta M = (1/M_1)(M_1 - M_n)/(t_n - t_1) \times 100\% \qquad (4)$$

where: M and t refer to mass flow rate and time and the subscripts "1" and "n" refer to the first and last five minute data interval, respectively.

Defrost time fraction: One last parameter that was calculated is the defrost time fraction (R). This parameter equals the elapsed time during the defrost divided by the total elapsed time for the freeze-defrost cycle.

RESULTS

Onset of freezing:

Analytical prediction: The mechanisms of freezing were discussed in a previous section. During the experimental study the most prevalent mechanism was the freezing of condensate, however, the formation of frost was also observed in many tests. To obtain an appreciation for the

parameters involved in the onset of freezing, a simple theoretical prediction of the onset of freezing in a counterflow exchanger was made based on the following simplifying assumptions:

1. Equal mass flow rates, i.e., the mass flow ratio = 1.

2. The airstream heat transfer coefficients are equal, i.e., the plate temperature is the mean of the bulk airstream temperatures.

3. Freezing occurs when the temperature of the surface is less than the freezing point (0°C) and the inlet dewpoint temperature of the warm air.

4. The temperature efficiency of the heat exchanger is independent of humidity when the inlet relative humidity of the warm airstream is less than 30%, and the temperature efficiency increases linearly by eight percentage points as the inlet humidity increases from 30 to 70%. (This assumption is an approximation based on data from this study and work by others.)

An iterative procedure was used for the calculations. In each iteration, the assumed value for the temperature of the inlet cold airstream was reduced by 0.25°C, and the minimum plate temperature was calculated using an energy balance to equate the heat gained by the cold airstream to the heat lost by the warm airstream. The calculations were terminated when the calculated plate temperature was less than both 0°C and the inlet dewpoint temperature of the warm airstream.

Figure 6 was plotted from a sample of the calculations performed and serves to demonstrate the relationship of some of the variables involved. First, temperature efficiency can have a significant impact on the onset of freezing although previous data on the onset of freezing were often published without any reference to temperature efficiency. The effects of different temperature efficiencies are demonstrated in the figure and the curves demonstrate the concept sometimes used to control freezing, namely, that a reduction in the efficiency lowers the inlet temperature of the supply airstream at which freezing is initiated. The reasons for the reduction of the temperature at the onset of freezing with high and low humidities of the exhaust airstream were explained previously. A peak temperature at which the onset of freezing occurs is predicted at a relative humidity of 25% to 35%. The model predicts that freezing occurs at temperatures that are significantly higher than the "Frost Threshold temperatures" listed by ASHRAE (1983). ASHRAE does not indicate the assumptions for their data.

<u>Flakt cross flow heat exchanger</u>: Figure 7 shows the experimental results for the onset of freezing of the Flakt exchanger. The core of this exchanger is mounted at 45° to the horizontal so the exhaust airstream flowed downward and thus the condensate was carried toward the coldest surfaces. The temperature efficiency encountered during these onset of freezing tests varied from 70% to 77%.

For the test results shown in the figure, the exhaust inlet temperature was 20°C and the mass flow ratio was unity. The results show a peak temperature at the onset of freezing of -2.7°C at the mid-range relative

humidity, but the actual location of the peak cannot be determined because tests were performed at only three different humidities. At the high relative humidity the onset of freezing was reduced because condensation tends to increase the surface temperatures. At low humidities, the inlet dewpoint temperatures were close to the freezing temperature, and the formation of frost was observed.

Air Changer heat exchanger: Figure 7. Although both airstream flows were predominantly horizontal in the Air Changer heat exchanger, some of the condensate drained against the direction of flow and presumably some re-evaporation of the condensate occurred. The results indicate the onset of freezing was almost independent of the relative humidity of the exhaust air. The exchanger showed some improvement over the Flakt since no freezing took place above -5°C.

Again the controlled variables, the exhaust airstream inlet temperature and the mass flow ratio were held constant at 20°C and unity, respectively. The temperature efficiency varied from 85 to 90% during these tests. The plate temperature at the cold end of the core was calculated for all the points plotted by assuming equal heat transfer coefficients (i.e., averaging the supply inlet and exhaust outlet temperatures). In all cases the calculated plate temperature was below 0°C for the tests where freezing was observed and above 0°C for tests without freezing, within the limits of experimental error.

For comparison to these results, the work completed at the University of Missouri-Rolla by Sauer et al. (1981) was included in Figure 7. The paper contains few details on how the data were collected. The inlet temperature of the exhaust airstream was held at 24°C (75°F) but no mention is made of the mass flow ratios used or the range of temperature efficiencies. In the LBL tests, the onset of freezing was observed visually. The authors of the Missouri-Rolla paper described the technique for determining onset of freezing based on a change in the exhaust airstream's pressure drop that was previously used by Ruth et al. (1975) of the University of Manitoba. If Missouri-Rolla researchers used this method to determine the onset of freezing it may account for the lower temperatures determined for the onset of freezing. Also, the temperature efficiency of the exchanger used for their tests may have been considerably lower than the efficiency of the exchanger used in LBL's tests.

Mitsubishi VL-1500 core: Figure 8 shows experimental results for the onset of freezing of a Mitsubishi core. The exchanger was a total enthalpy type and the core was arranged for cross flow. This flow arrangement caused the exhaust airstream to flow upward at 45° and the condensate downward against the flow.

As anticipated the results do not indicate any lowering of the temperature of the onset of freezing as the relative humidity of the exhaust air increases. The moisture is transferred out of the exhaust airstream lowering the specific humidity and the dewpoint, as the flow progresses toward the outlet. In tests with low inlet relative humidities, it is apparent that the dewpoint of the exhaust airstream has been lowered considerably below the freezing temperature because the onset of freezing is significantly lower than for the other units tested. This fact is confirmed by the measurements of outlet humidity.

For comparison purposes the University of Manitoba results by Ruth et al. (1981) have been plotted in the same figure. The similarity in the shapes of the characteristic curves are of interest. The University of Manitoba tests were performed on a rotary-type total enthalpy exchanger consisting of a hygroscopic wheel. The onset of freezing temperature was again considerably lower due to the removal of the moisture from the exhaust airstream and the resultant lowering of the dewpoint. The onset of freezing was determined by the previously described technique based on exhaust airstream pressure drop.

General observations: Comparing the work performed in the LBL facilities with the previous work that had been performed on the onset of freezing highlighted some of the shortcomings. In this work the onset of freezing was determined visually which, although positive, may not be convenient and does not assure that sufficient freezing would occur to reduce performance significantly. The choice of a 50 Pascal increase in the static pressure drop of the exhaust airstream as the criterion for the onset of freezing is not appriopriate for all heat exchanger designs. Standard procedures for testing residential air-to-air heat exchangers are now being developed in Canada and development of similar test procedures is being considered in the U.S., thus, the establishment of an acceptable and universal method of determining the onset of freezing is recommended. It is also recommended that temperature efficiencies be included in any freezing data because it is difficult to compare results from differenct investigations without these data.

Freeze-Defrost Cycles with a Cold Airstream Temperature of -12°C:

As indicated in the previous description of experimental protocol, tests of both the Flakt and Air Changer heat exchangers were conducted with freezing and periodic defrosts. In this section we first discuss results from tests with the temperature of the inlet cold airstream maintained at approximately -12°C.

Trends with time: Two parameters that were highly affected by the freezing within these exchangers are the temperature efficiency and the mass flow rate of the warm airstream. As typical examples, these parameters and the inlet temperature of the cold airstream are plotted versus time in Figures 9 and 10.

Figure 9 shows these plots for a test of the Flakt exchanger with the inlet relative humidity of the warm airstream maintained at approximately 30%. In this test, the duration of the freeze (i.e., the elapsed time between the end of the previous defrost and the start of the subsequent defrost) was 13.3 hours and the defrost of the core required approximately 0.8 hours. At the start of the test, the temperature of the inlet cold airstream fell rapidly after which it decreased slowly. The average temperature was -13°C. There was a sharp peak in temperature efficiency at the start of the test which is attributed to heat storage in the core during the previous defrost and subsequent transfer of this heat to the cold airstream. Neglecting data during this initial peak, the efficiency decreased gradually from 72% to 42% and the rate of decrease in efficiency leveled off over time. After the defrost, the efficiency returned to approximately its initial value.

The trend in mass flow rate during this test was similar to the trend in temperature efficiency, although there was no initial peak in flow rate and no leveling off of the rate of decrease in flow rate.

Figure 10 shows the same plots for two successive freeze-defrost cycles with approximately a four hour duration of the freeze. The inlet relative humidity of the warm airstream was maintained at approximately 55%. No sharp peak in temperature efficiency is evident in this figure. We expect that a peak in efficiency occurred but that it was not recorded due to its short duration and the periodic nature of our measurements. The average rate of decrease in temperature efficiency and mass flow rate was greater during this test than during the previously described test due to the higher inlet humidity and shorter duration of the freezing period.

The trends in temperature efficiency and mass flow rate during tests of the Air Changer heat exchanger were similar to the trends in tests of the Flakt exchanger, however, the rates of decrease in these parameters were generally much smaller. In addition, the rate of decrease in temperature efficiency did not level off significantly with time even during tests of 14 hours in duration.

Visual Observation: During tests of each exchanger, the face of the core where the warm airstream exits, was visually inspected through windows installed in the case. In the crossflow Flakt core, the coldest surfaces should theoretically be located at the lower edge of this outlet face. Frost or ice appeared first along this edge and then progressed upward with increasing time. A white, opaque solid, assumed to be frost, was frequently observed in the colder regions of the core especially during tests with low inlet relative humidities. A more translucent solid, assumed to be ice, was also observed and was generally present in greater quantities than the frost. Initially, the ends of individual triangular flow passages became plugged with ice or frost but as time progressed large portions of the face of the core became covered with ice and icicles extended from the surface of the core. The face of the core was never entirely obstructed because the warmer, top regions of the core remained free of ice or frost. It was not unusual to simultaneously observe frost and ice, and condensate dripping from the core.

Based on the visual observations, we suspect that during these tests many of the flow passages became obstructed at their cold end before substantial ice or frost formed deeper within the core. Obstruction of the end of a flow passage would prevent flow of air along the entire passage and, therefore, render the surface area in that passage useless for heat transfer. We also suspect that the direction of water drainage had a large impact on performance. Because condensed water drained toward the cold end of the core where it could freeze, the rate of ice formation and performance deterioration was probably more rapid. Under conditions with freezing, this exchanger might perform better if the warm air flowed upward and condensed water drained against the direction of flow toward the warmer end of the core, despite the adverse impact on performance that would result from re-evaporation of condensed water.

In the Air Changer heat exchanger, the warm airstream exits the core through a series of long narrow slots instead of very small flow passages. In the core of this exchanger, the warm airstream flows through passages

that consist of the space between the parallel plates that separate the two airstreams. These flow passages for the warm airstream are not subdivided into smaller passages as in the Flakt exchanger, thus complete blockage of the end of a flow passage with ice would appear less likely. Ice or frost (primarily ice) first formed at the coldest end of the slots through which the warm airstream exited and progressed with time toward the warmer end of the slots. A slot never became completely obstructed with ice, although it is possible that flow passages become substantially or completely obstructed at locations within the core that we could not observe. The rate of ice formation at the outlet face of this core was considerably less than the rate of ice formation observed during tests of the Flakt exchanger.

Based on the visual observations, two factors may help to explain why performance deteriorations were less rapid in this exchanger. First, the flow passages for the exhaust airstream were not small enough to be easily obstructed by ice. Secondly, much of the water that condenses within this core drains toward the warmer end of the core instead of the colder end where it could freeze.

<u>Rate of change of temperature efficiency</u>: The average rate of change in temperature efficiency ($\Delta\varepsilon$) during the periods of freezing (i.e., the periods of time between defrosts) as well as other calculated results and the average properties of the inlet airstreams are tabulated in Tables 1 - 3. The data on rate of change of temperature efficiency are also plotted versus duration of freeze in Figures 11 and 14.

In tests of the Flakt exchanger, $\Delta\varepsilon$ ranged from 1.5 %/h (percentage points decrease in ε per hour) to 13.0 %/h. There is significant scatter in the data but the highest values of $\Delta\varepsilon$ occurred for tests with a high inlet humidity and a fairly short duration of freeze (1 - 4 hours). In tests with the inlet relative humidity of the warm airstream maintained at 40 and 55%, the average value of $\Delta\varepsilon$ decreased significantly with an increase in test duration. This trend may be explained by the leveling off in ε that was observed as time progressed during an individual test. It is also clear from the figure, that an increase in $\Delta\varepsilon$ is associated with an increase in the inlet humidity of the warm airstream at least for tests with duration of freeze from one to four hours.

In tests of the Air Changer heat exchanger, $\Delta\varepsilon$ ranged from 0.6 %/h to 2%/h. On the average, $\Delta\varepsilon$ was much smaller during tests of this exchanger compared to its value during tests of the Flakt. There are insufficient data to indicate correlations between $\Delta\varepsilon$ and inlet humidity or the duration of freeze.

<u>Rate of change in mass flow rate</u>: The rates of change in mass flow rate of the initially warm airstream as a percentage of initial flow rate (ΔM) are tabulated in Tables 1 - 3. The relationships between ΔM and tests conditions (i.e., duration of freeze and inlet humidity) were generally similar to the relationships discussed above for $\Delta\varepsilon$.

For tests of the Flakt exchanger, the ratio $\Delta M/\Delta\varepsilon$ (not tabulated) averaged 0.9 (with a standard deviation of 0.6) and ranged from 0.3 to 1.6. The average of $\Delta M/\Delta\varepsilon$ from tests of the Air Changer was 2.2 (with a standard deviation of 0.7) and the range was from 1.1 to 3.2. Thus, the

temperature efficiency of the Air Changer appeared to be less affected by the reductions in mass flow rate.

The expected relationship between a reduction in mass flow rate and a reduction in temperature efficiency is complex. Because the flow in these exchangers is laminar, the convective heat transfer coefficients should be largely independent of flow rate. However, as mentioned earlier this convective heat transfer coefficient may be enhanced by the condensation and ice or frost deposition. Changes in the flow rate through the small passages in these exchangers will affect the temperature profiles in the cores and therefore the temperature efficiency (note that the flow rate in some channels may be reduced and in others it may be increased). Finally, the reductions in flow rate may be due, in part, to complete obstruction of some flow passages which would cause a reduction in effectiveness.

Defrost time fraction: Another calculated parameter is the defrost time fraction (Figures 12 and 15) which equals the time required to defrost divided by the total elapsed time during the freeze-defrost cycle. The value of R, expressed as a percentage, ranged from 4 to 26% in tests of the Flakt exchanger and from 6 to 17% in tests of the Air Changer. These ranges are not directly comparable, however, because tests of shorter and longer duration were conducted with the Flakt exchanger. If tests of the same duration are compared, the values of R for the two exchangers are not highly different. The value of R decreases with an increasing test duration, indicating that the defrost time is used more effectively after a long freeze.

As shown later, in tests of the Flakt exchanger the optimal length of time between defrosts appeared to be in the range of 1-6 hours. Thus, defrost time fractions of roughly 15% would generally be required when operating the exchanger under similar conditions. (Defrost time fractions up to 25% may be required if the inlet humidity is high and the duration of the freeze is 1-2 hours.) The optimal time between defrosts of the Air Changer heat exchanger under the test conditions appeared to be in the range of 6-13 hours. No data are available with freeze periods in this range, but the available data suggests that defrost time fractions of 6 to 12% would be required under these conditions.

It should be noted that the test protocol did not permit determination of the optimal value of R for any given test. Also, the decision of when to terminate defrosts was subjective because it was based on visual indicators. The value of R varied significantly between repeated cycles of tests and repeated tests, especially for tests of short duration.

Time averaged temperature efficiency: One final calculated parameter (plotted in Figures 13 and 14) is the time averaged temperature efficiency (ε_{avg}). Obviously, it is desirable to operate the exchanger in a manner that will maximize the average temperature efficiency.

The value of ε_{avg} ranged from 48 to 64% in tests of the Flakt exchanger. The average temperature efficiency was higher when the time between defrosts was 1-6 hours compared to 10-20 hours. An average efficiency of ~62% was typical for tests of 1-4 hours duration with inlet relative humidities of approximately 30 and 40%. The temperature efficiency during initial stages of the freeze cycles was typically in the

range of 72 to 82% depending on inlet humidity. Therefore, a decrease in average temperature efficiency of roughly 15 percentage points can be attributed to the freezing and the required defrosts when the inlet humidity was 30 and 40%. A greater reduction in performance occurred with higher inlet humidities.

In tests of the Air Changer, the average temperature efficiencies were significantly higher and ranged from 70 to 82%. The optimal time between defrosts appeared to be in the range of 6 to 13 hours, although no tests were conducted in this range. Properly operated under conditions similar to those in the tests, average temperature efficiencies of 73 to 82% appear achievable, although the higher efficiencies would occur only with a high inlet humidity. It should be noted that there was significant leakage of air (~5%) during the tests from the warm to the cold airstream, thus the measured temperature efficiencies cannot be attributed entirely to heat transfer across surfaces in the core. The temperature efficiencies of this exchanger during the initial periods of freeze-cycles were in the range of 86 to 91%. Therefore, roughly a 10% reduction in temperature efficiency can be attributed to the freezing and the required defrost cycles under these operating conditions. The reductions in temperature efficiency noted above (10 and 15%) are based on the assumption that the periodic defrosts are controlled in a fairly optimal manner. The methods currently used to initiate and terminate periodic defrosts in residential heat exchangers may, in many cases, not provide optimal performance. Thus, larger reductions in average temperature efficiency due to freezing may be common.

Freeze-Defrost Cycles with Cold Airstream Temperature of -20°C:

A limited number of tests were performed with the average inlet temperature of the cold airstream maintained at a significantly lower value (i.e., approximately -20°C compared to -12°C). These tests were conducted only with the Flakt heat exchanger and only with warm airstream relative humidities of approximately 32 and 42%. The results are tabulated in Table 2 and plotted as open data points in Figures 11 - 13.

During most of these low-temperature tests, there were small reductions (~8%) in the mass flow rates of the cold airstream due to freezing on the cooling coils of the test system, and these reductions undoubtedly affected the results. The rates of decrease in temperature efficiency were two to three times greater during low-temperature tests compared to the rates of decrease during corresponding tests with a higher cold airstream temperature. Despite this fact, for tests with a two-hour freeze duration, the defrost time fractions and average temperature efficiencies were not significantly different from those observed with the higher cold-stream temperatures. In tests with a three- and four-hour duration of freeze, however, the defrost time fraction was increased and the average effectiveness was reduced compared to the higher-temperature tests. The number of tests performed was insufficient for definite conclusions, but the results indicate that it is desirable to defrost more frequently when the temperature of the inlet cold stream is low.

Control of Freeze-Protection Systems:

One of the objectives of this study was to identify parameters that could be used as input signals for a control-system that initiates (and possibly terminates) some technique of freeze protection. Various techniques of freeze-protection were described previously (e.g., periodic defrost, preheat, etc.).

A common control strategy is to sense the outdoor temperature and activate the freeze protection system when this temperature is below the onset of freezing. Using a thermostat and a timer, the cold airstream's fan is turned off for a period of time at regular intervals. The data on onset of freezing, defrost frequency, and defrost time fraction in this report should be useful as design parameters for such a control system. An attractive feature of this control system is its simplicity and low cost; however, it cannot provide optimal performance since it does not adjust for changes in indoor humidity and outdoor temperature. Also, considerable information on the freezing characteristics of the exchanger is required, and testing to determine this information is time-consuming and expensive.

Another strategy that is not unusual is to sense the outlet temperature of the supply airstream and to activate the freeze protection system, generally a preheat system, to maintain this temperature above some value. A weakness of this strategy is that a number of factors besides freezing could possibly reduce the supply temperature below the set point (e.g., low outdoor temperatures, and fouling of the heat exchange surfaces).

A strategy that has been suggested is to use the drop in static pressure of the exhaust airstream as it passes through the core as the controlling parameter. As ice or frost forms in the core, this pressure-drop will increase and a defrost could be initiated after a certain increase. This pressure-drop will decrease as the ice or frost melts and the control system could terminate the defrost when the pressure-drop returns to its value prior to freezing. To initiate the defrost when a 10% drop in flow rate occurs, which corresponded to roughly a five to ten percent drop in temperature efficiency in our tests, would require that the control system respond to a very small change in pressure-drop. For example, based on the fan performance data for the Flakt and Air Changer heat exchangers, the increase in pressure-drop would be roughly 10 and 5 Pa, respectively, for a 10% decrease in flow rate from 200 to 180 kg/h.

With the decreasing cost of electronic systems, it may be cost effective to develop more "intelligent" control systems for freeze protection. An intelligent control system would: 1) activate the freeze protection system only when needed, 2) automatically adjust for changes in indoor humidity, outdoor temperature, and flow rate, 3) not be activated by performance changes caused by factors other than freezing, and 4) eliminate the need for extensive testing of each unit under conditions of freezing. For example if a defrost technique is employed, the control system might sense the appropriate airstream temperatures to allow a determination of temperature efficiency, and also sense the temperature of a heat-exchange surface at the cold end of the core. The defrost could be initiated only when the surface temperature was below freezing and the temperature efficiency had dropped below a certain value. The defrost could be terminated when the temperature of the heat exchange surface increased to a few

degrees centigrade. A preheat system might be controlled by a similar set of sensors. Alternately, the control system might sense only the temperature of the heat exchange surface and provide sufficient preheat to maintain this temperature above freezing. In fact, a simple thermostatic control system based on the temperature of the heat exchange surface might be preferable to a thermostat-timer system based on air temperature. The actual desirability of more "intelligent" control systems will depend on their cost and performance. It is more important to optimize the freeze protection system if the heat exchanger will be used in a very cold climate.

Suggestions for Future Experimental Studies:

Based on our studies, the following are suggestions for future experimental investigations of freezing in air-to-air heat exchangers. First, it would be beneficial if different investigators used the same criteria for the onset of freezing. Since temperature efficiency is the variable of primary interest, a useful criterion for the onset of freezing might be a reduction in temperature efficiency by a specified amount (e.g., 5%) from a reference value of efficiency that is measured with the same test system. The reference value of temperature efficiency could be the measured value with the same inlet temperature and humidity for the warm airstream and with an inlet cold stream temperature slightly above freezing (e.g., 2°C). Secondly, further information would be gained by experimental studies of freezing in additional models of heat exchangers and under a wider variety of operating conditions. Additional investigations of freezing in heat exchangers with low inlet cold-stream temperatures would be particularly valuable. Third, if residential heat exchangers are to be used in regions with very cold climates, improved techniques for freeze protection and improved control systems for these techniques are desirable; thus, experimental evaluation of various methods of freeze-protection would be valuable. Finally, information on temperature and humidity profiles in the cores of exchangers under conditions with freezing would be of value for model development and verification.

SUMMARY AND CONCLUSIONS

An experimental investigation of freezing in residential air-to-air heat exchangers was conducted. The temperature of the cold airstream at the onset of freezing and its dependence on the relative humidity of the inlet warm airstream was determined for three exchangers of different design. In two of the heat exchangers (a crossflow and a counterflow), performance under conditions with freezing and periodic defrosts was studied in detail.

The onset of freezing, as determined by visual observation, ranged from approximately -3°C to -12°C and was a function of both heat exchanger design and the humidity of the warm airstream. These results are in fair agreement with determinations of the onset of freezing for the limited number of reported field studies with similar heat exchangers and with theoretical predictions presented in this paper. Data from a previous laboratory study of the onset of freezing in a counterflow exchanger and

tabulated data supplied by ASHRAE, however, indicate that freezing is initiated with significantly lower cold stream temperatures, particularly when the warm airstream is humid. In future studies, it would be beneficial if different investigators used the same criteria for the onset of freezing and a suggestion for this criteria is provided in this paper.

In tests of a cross-flow heat exchanger, freezing caused the temperature efficiency to decrease at a rate from 1.5 to 13.2 percentage points per hour (%/h). More rapid decreases in efficiency were associated with lower cold airstream temperatures, higher warm airstream humidities, and shorter periods of freezing. Temperature efficiency decreased at a slower rate (0.6 to 2.0 %/h) during tests of a counterflow heat exchanger. From observations of the cores during freezing, it appeared that the performance of the counterflow heat exchanger decreased at a slower rate because the core contained larger flow passages which are not easily obstructed by ice, and because much of the condensed water drained to the warm end of the core where it could not freeze.

The amount of time required to defrost these heat exchangers divided by the total operating time (i.e., the defrost time fraction) ranged from 0.06 to 0.26 and did not differ greatly between the crossflow and counterflow exchangers when corresponding tests were compared. This "defrost time fraction" was smaller after a longer period of freezing which indicates that the defrosting periods are used more effectively after significant ice or frost had formed in the exchangers. With an inlet cold airstream temperature of approximately -12.5°C, the optimal amount of time between defrosts appeared to be in the range of one to six hours for the crossflow exchanger and six to thirteen hours for the counterflow exchanger. With lower cold airstream temperatures, more frequent defrosts may yield a better average performance.

When the frequency of defrosts was in the optimal range, the average temperature efficiency for freeze-defrost cycles was in the range of 62% for the crossflow exchanger and 75% for the counterflow exchanger. The counterflow exchanger had a higher average efficiency because of its superior performance without freezing and because its performance was less rapidly affected by freezing. It was estimated that the freezing and periodic defrosts reduced the average temperature efficiency of the crossflow and counterflow exchangers by 15% and 10%, respectively. Larger reductions in average performance occurred when the frequency or duration of defrosts was far from optimal.

This investigation indicates that the performance of residential air-to-air heat exchangers need not be drastically reduced under freezing conditions. A freeze-protection system is clearly desirable if these exchangers are to be used in cold climates. Heat exchanger designs that minimize the effects of freezing, and improved controls for freeze-protection systems, are recommended.

ACKNOWLEDGEMENTS

The efforts of a number of people who contributed to this study are greatly appreciated. Lloyd Davis and Al Robb designed and fabricated much of the experimental system. Assistance provided by James Koonce helped greatly to keep the project moving forward. Reports by Professor Ralph Seban and Ali Rostami at the University of California, Berkeley were helpful for the planning of this research and for interpretation of the data. The efforts by Dr. Harry Keller in an early field study of freezing in a residential heat exchanger are greatly appreciated. We would also like to thank Gayle Milligan and Dolores Henricksen for preparation of the typescript, Moya Melody for supervising the preparation of figures, and Dave Grimsrud, Ralph Seban, Les Christiansen, and Fred Bauman for their reviews of this document.

This work was supported by the Assistant Secretary for Conservation and Renewable Energy, Office of Buildings and Community Systems, Buildings Division of the U.S. Department of Energy under Contract No. DE-AC03-76SF00098.

REFERENCES

1. American Society of Heating, Refrigerating, and Air Conditioning Engineers (ASHRAE), 1983, 1983 Equipment, American Society of Heating, Refrigerating, and Air Conditioning Engineers, Inc., Atlanta, GA 30329.

2. American Society of Mechanical Engineers (ASME), 1971, Fluid Meters, Their Theory and Application, 1971.

3. Besant, R.W. and Bugg, J.D., 1982, "The Performance of a Counterflow Air-to-Air Heat Exchanger with Water Vapor Condensing and Frosting", Department of Mechanical Engineering, University of Saskatchewan, Saskatchewan, Canada S7N OWO.

4. Fisk, W.J. and Turiel, I., 1983, "Residential Air-to-Air Heat Exchangers: Performance, Energy Savings, and Economics", Energy and Buildings, 5, pp. 197-211.

5. National Academy of Sciences, 1981, Indoor Pollutants, National Academy Press, Washington, D.C. 20418.

6. Offermann, F.J. et al., 1982, "Residential Air-Leakage and Indoor Air Quality in Rochester, New York", Lawrence Berkeley Laboratory Report, LBL-13100, Berkeley, CA 94720.

7. Rostami, A.A., 1982, "Condensation and Frost Formation in Heat Exchangers", Ph.D. Dissertation, Faculty of Engineering, University of California, Berkeley, CA 94720.

8. Ruth, D.W. et al., 1975, "Investigation of Frosting in Rotary Air-to-Air Heat Exchangers", ASHRAE Transactions 81, Pt. 2, 1975.

9. Sauer, H.J. et al., 1981, "Frosting and Leak Testing of Air-to-Air Energy Recovery Systems", ASHRAE Transactions 87, Pt. 1, 1981.

10. Svensson, A., 1982, "Efficiency of Air-to-Air Heat Exchangers in Occupied Houses", in Proceedings of the 3rd Air Infiltration Centre Conference on Energy Efficient Domestic Ventilation Systems for Achieving Acceptable Indoor Air Quality", in London, U.K., September 20-23, 1982.

Table 1. Results from tests of cross-flow Flakt heat exchanger with inlet temperature of cold stream between -10.7°C and -13.2°C

TEST # (-)	WARM INLET TEMP. (°C)	WARM INLET R.H. (%)	INITIAL WARM OUTLET FLOW (Kg/h)	COLD INLET TEMP. (°C)	INITIAL COLD OUTLET FLOW (Kg/h)	DURATION OF FREEZE (h)	INITIAL TEMP. EFF. (%)	RATE OF DECREASE IN TEMP. EFF. (%/h)	AVERAGE TEMP. EFF. (%)	RATE OF DECREASE IN WARM STREAM FLOW (%/h)	DEFROST TIME FRACTION (-)
FL1	19.9	39	225	-11.9	218	17.0	77	2.6	48.5	3.7	0.07
FL2	20.0	39	223	-10.8	219	4.0	75	3.4	61.6	3.7	0.12
FL3	20.0	39	223	-12.1	220	0.9	74	5.2	63.0	4.4	0.14
FL4	19.7	28	222	-11.8	218	21.0	74	1.5	52.4	1.3	0.04
FL5	19.9	29	225	-11.1	218	4.1	71	2.5	62.1	1.4	0.07
FL6	19.4	30	225	-13.1	218	13.3	72	2.3	53.1	2.8	0.06
FL7	19.9	30	226	-12.3	219	2.0	74	2.4	62.0	0.8	0.14
FL8	19.9	29	226	-12.1	220	2.0	73	2.0	--	1.2	--
FL9	19.9	29	225	-12.3	215	16.0	75	1.9	53.6	1.5	0.10
FL10	20.2	54	220	-11.1	215	1.0	80	9.9	56.8	8.2	0.26
FL11	20.1	55	220	-10.7	211	1.0	81	10.4	59.8	7.6	0.24
FL12	20.7	54	215	-11.6	204	11.5	82	2.5	54.0	1.1	0.08
FL13	20.2	54	218	-13.2	247	2.0	76	13.0	50.8	15.7	0.22
FL14	20.0	54	220	-12.9	240	2.0	76	11.8	--	12.1	--
FL15	20.1	55	220	-12.1	238	3.8	76	8.6	48.2	7.0	0.15
FL16	20.1	56	220	-11.7	238	9.8	77	3.5	47.7	2.4	0.10
FL17	20.1	42	225	-12.1	231	5.8	74	4.4	58.0	6.8	0.08
FL18	20.0	42	222	-12.2	229	6.0	74	4.3	54.4	6.9	0.10
FL19	20.0	32	225	-12.1	229	5.8	72	2.4	60.2	3.0	0.09
FL20	20.1	42	222	-11.4	227	6.0	75	4.8	57.9	6.9	0.10
FL21	20.1	32	225	-10.9	229	5.9	74	2.2	64.2	2.0	0.06
FL22	19.5	30	226	-13.0	219	15.8	72	2.1	51.3	2.2	0.06
FL23	20.2	55	221	-11.9	211	14.9	83	2.8	51.7	1.9	0.07

Table 2. Results from tests of cross-flow Flakt heat exchanger with inlet temperature of cold stream between -19.1°C and -20.8°C

TEST # (-)	WARM INLET TEMP. (°C)	WARM INLET R.H. (%)	INITIAL WARM OUTLET FLOW (Kg/h)	COLD INLET TEMP. (°C)	INITIAL COLD OUTLET FLOW (Kg/h)	DURATION OF FREEZE (h)	INITIAL TEMP. EFF. (%)	RATE OF DECREASE IN TEMP. EFF. (%/h)	AVERAGE TEMP. EFF. (%)	RATE OF DECREASE IN WARM STREAM FLOW (%/h)	DEFROST TIME FRACTION (-)
FL24	20.1	32	225	-19.9	231	1.8	73	6.0	61.1	6.5	0.12
FL25	20.2	33	225	-20.8	229	3.1	73	6.4	54.8	15.0	0.14
FL26	20.1	32	227	-20.5	234	2.4	73	6.8	--	10.9	--
FL27	20.2	32	229	-20.1	235	4.0	74	5.5	58.4	9.3	0.11
FL28	20.0	32	225	-20.4	232	5.2	73	4.8	--	12.3	--
FL29	20.1	42	223	-19.1	220	1.6	74	7.8	62.1	13.3	0.13
FL30	20.1	42	222	-20.7	220	2.9	75	13.2	--	28.7	--
FL31	20.1	42	223	-20.4	229	4.0	73	10.8	--	22.6	--

Table 3. Results from tests of counterflow Air Changer heat exchanger.

TEST # (-)	WARM INLET TEMP. (°C)	WARM INLET R.H. (%)	INITIAL WARM OUTLET FLOW (Kg/h)	COLD INLET TEMP. (°C)	INITIAL COLD OUTLET FLOW (Kg/h)	DURATION OF FREEZE (h)	INITIAL TEMP. EFF. (%)	RATE OF DECREASE IN TEMP. EFF. (%/h)	AVERAGE TEMP. EFF. (%)	RATE OF DECREASE IN WARM STREAM FLOW (%/h)	DEFROST TIME FRACTION (-)
AC1	19.9	33	191	-11.9	191	2.1	86	0.7	72.0	1.6	0.17
AC2	19.9	31	190	-13.5	185	14.3	88	1.4	74.4	1.5	0.07
AC3	20.0	32	187	-13.7	190	3.6	86	2.0	70.2	4.1	0.15
AC4	20.0	31	191	-13.0	191	6.0	87	0.9	76.7	1.6	0.09
AC5	20.0	33	191	-11.9	191	2.0	87	0.6	75.1	1.2	0.14
AC6	19.9	32	191	-13.2	191	3.9	86	1.3	74.5	3.0	0.11
AC7	19.8	43	188	-12.8	193	1.9	87	0.8	71.1	2.5	0.17
AC8	20.1	43	184	-13.1	189	5.9	86	1.0	73.4	3.2	0.13
AC9	20.2	41	187	-13.2	188	13.6	87	2.0	72.9	2.9	0.06
AC10	20.0	57	181	-13.8	191	2.0	89	1.0	74.2	1.7	0.16
AC11	20.0	57	191	-12.1	187	5.4	91	0.7	81.8	2.1	0.10
AC12	20.0	57	184	-13.3	187	14.4	91	1.4	80.7	2.8	0.06
AC13	19.9	44	186	-15.6	191	4.0	85	2.0	71.6	6.3	0.14
AC14	20.0	58	184	-16.0	191	6.0	90	1.9	77.0	5.0	0.11

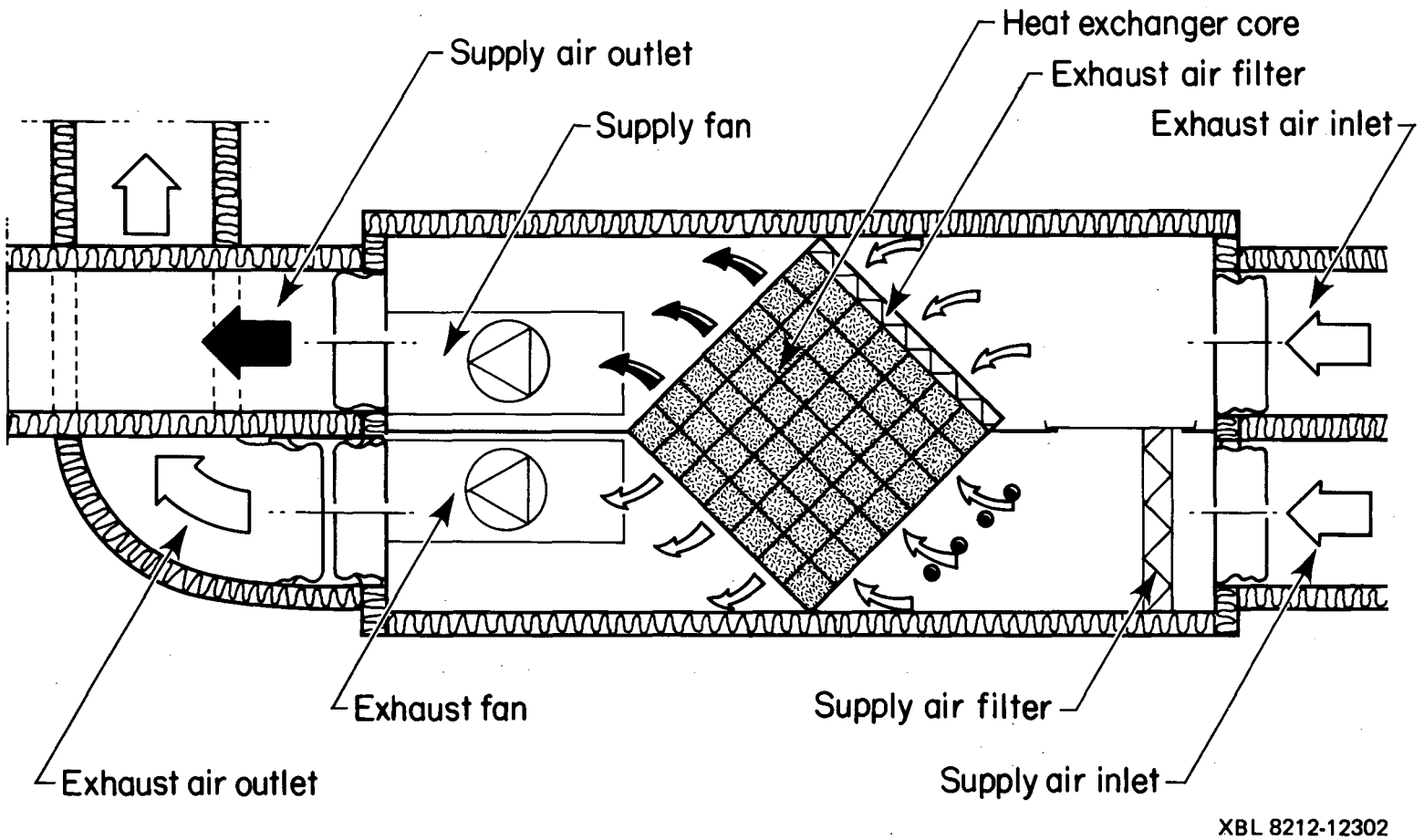

Figure 1. Schematic diagram of a residential air-to-air heat exchanger.

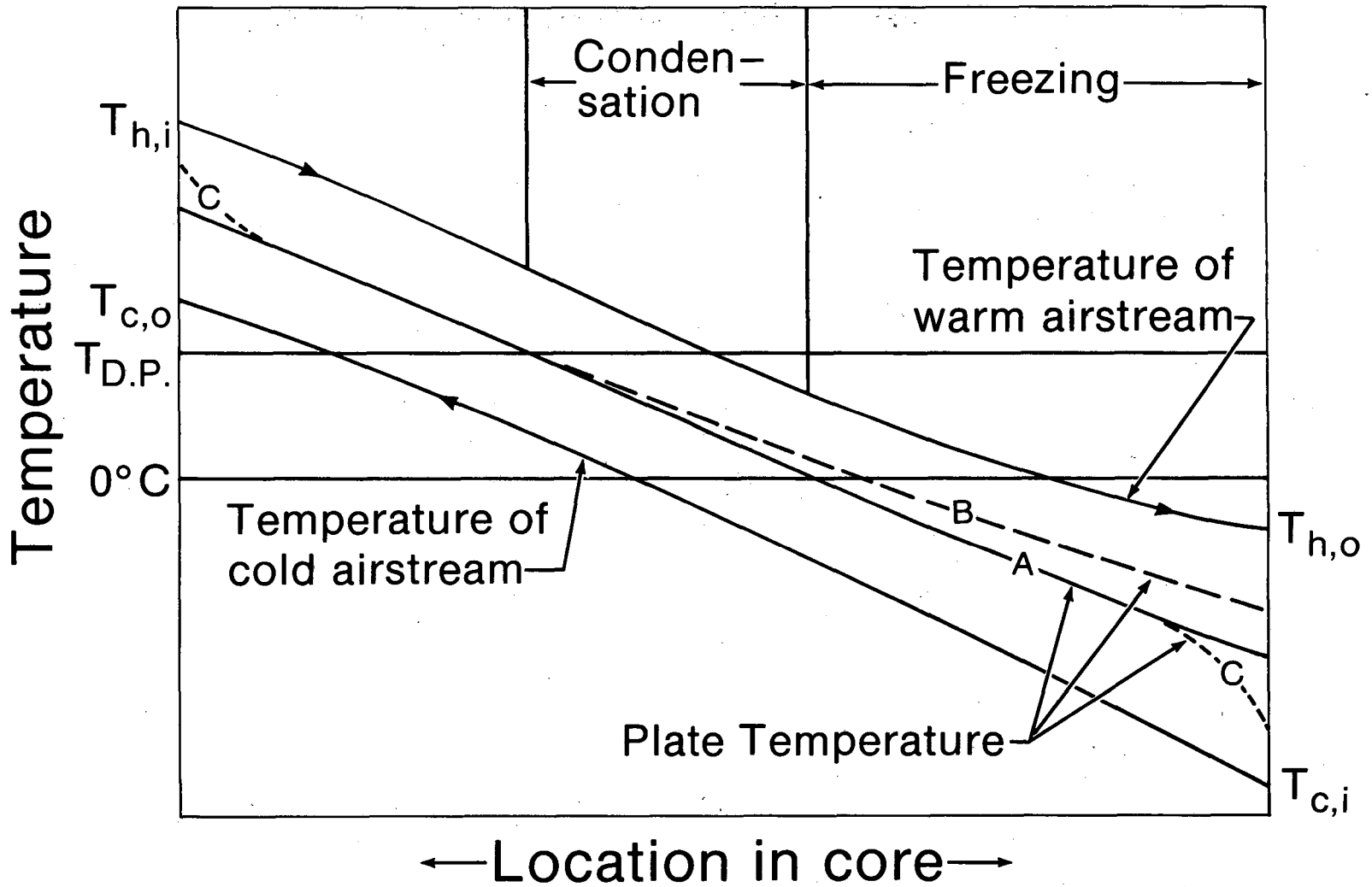

XBL 8310-885

Figure 2. Illustration of bulk airstream and plate temperatures versus location in core for a counterflow air-to-air heat exchanger with condensation and freezing. Line A represents the plate temperature if the convective heat transfer coefficients for the warm and cold airstreams are equal. Line B represents the plate temperature if the convective heat transfer coefficient of the warm stream is increased due to condensation. Line C illustrates the impact of hydrodynamic and thermal entrance effects on plate temperature. $T_{h,i}$, $T_{h,o}$, $T_{c,i}$, $T_{c,o}$, and $T_{D.P.}$ are the warm inlet, warm outlet, cold inlet, cold outlet, and dewpoint temperatures, respectively.

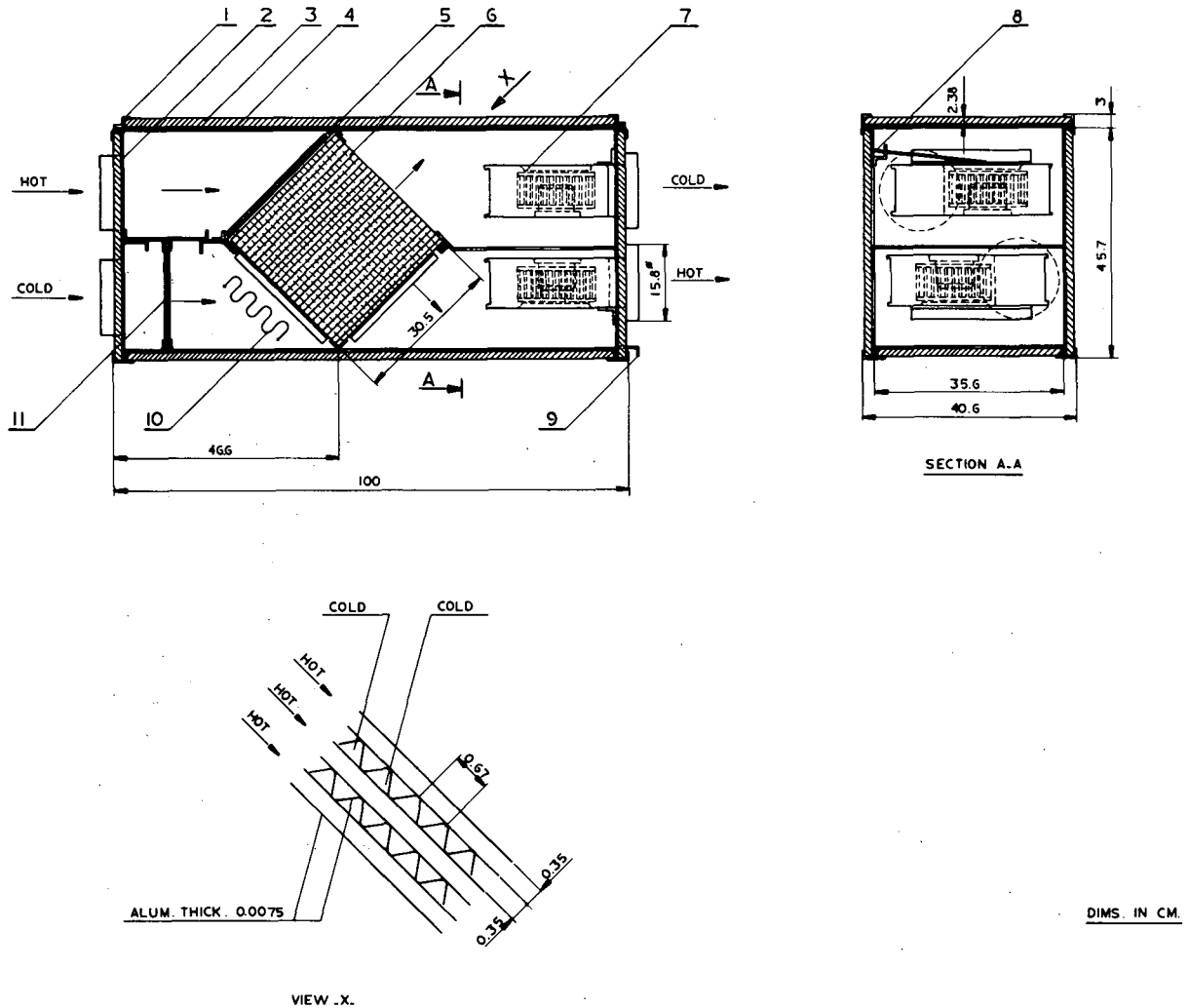

XBL 808-11480

Figure 3. Engineering drawing of Flakt heat exchanger. The components are as follows: 1=cover, 2=mainframe of case, 3=insulation, 4=gasket, 5=filter, 6=core, 7=fan and motor, 8=temperature sensor, 9=condensate drain, 10=heating element, 11=filter. Components No. 8 and 10 were not included in the unit tested. This design is protected by patents.

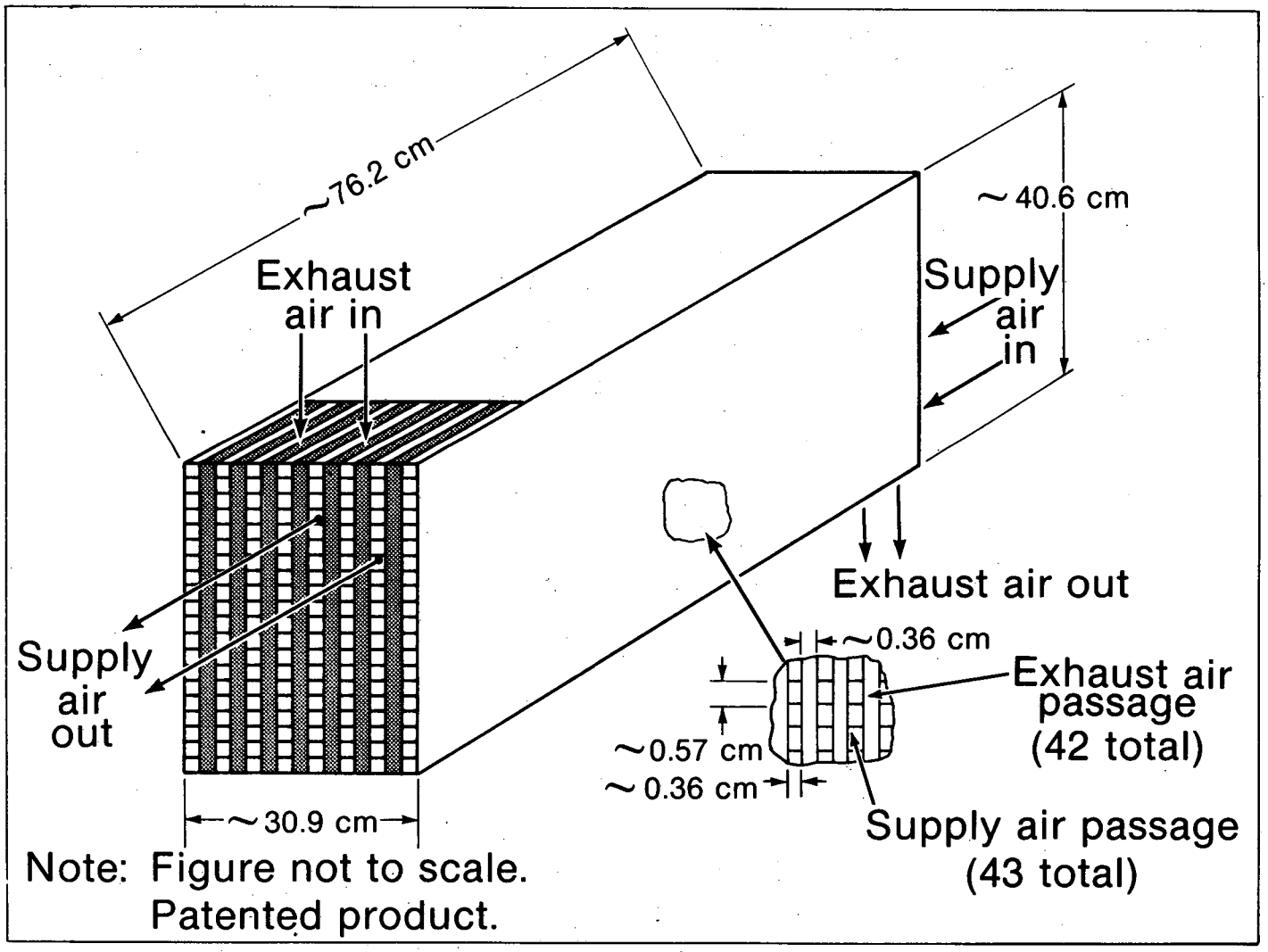

XBL 8310-886

Figure 4. Illustration of core of Air Changer heat exchanger. This design is protected by patents.

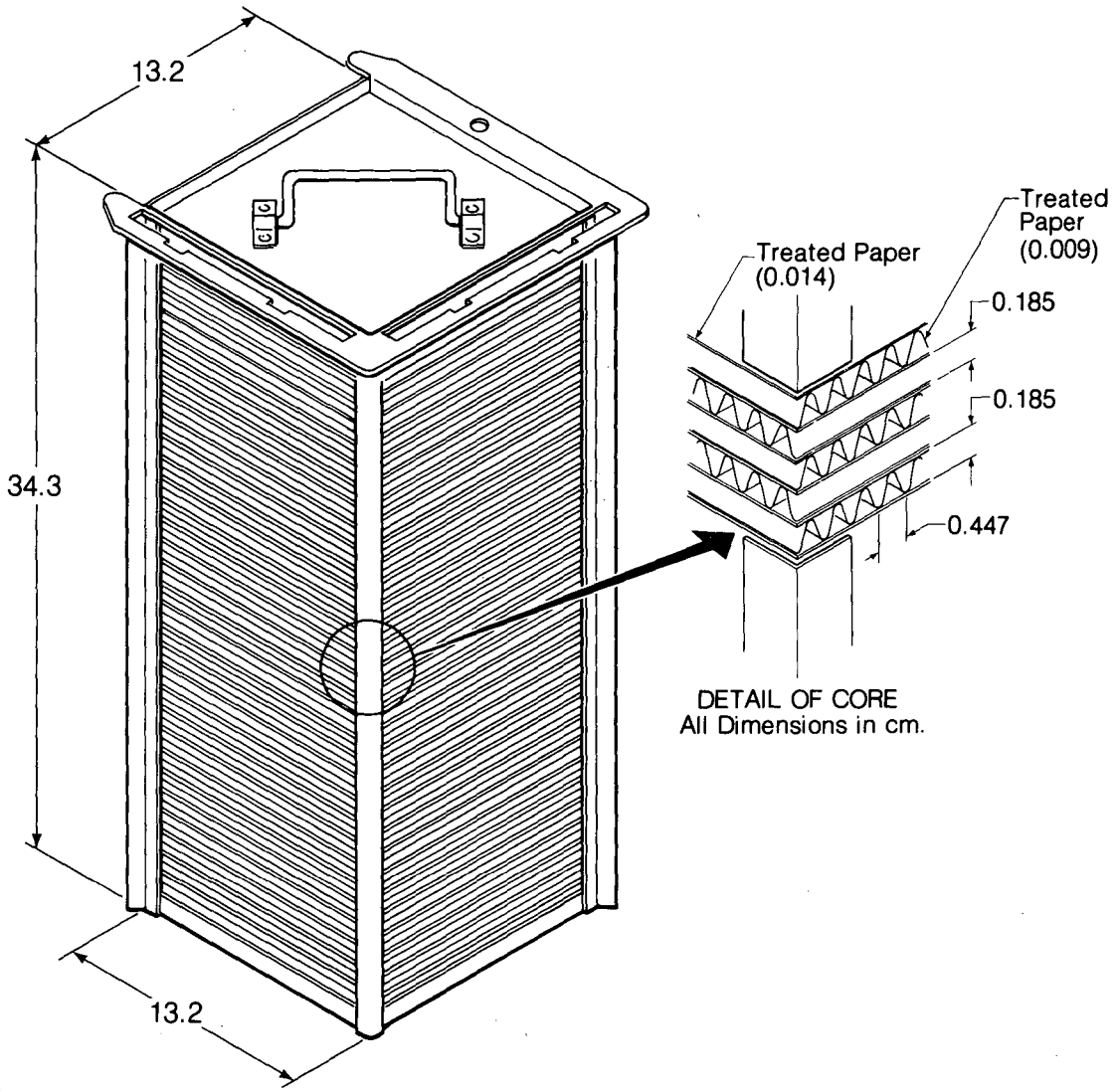

XBL 8310-12238

Figure 5. Illustration of core from Mitsubishi VL-1500 heat exchanger. This design is protected by patents.

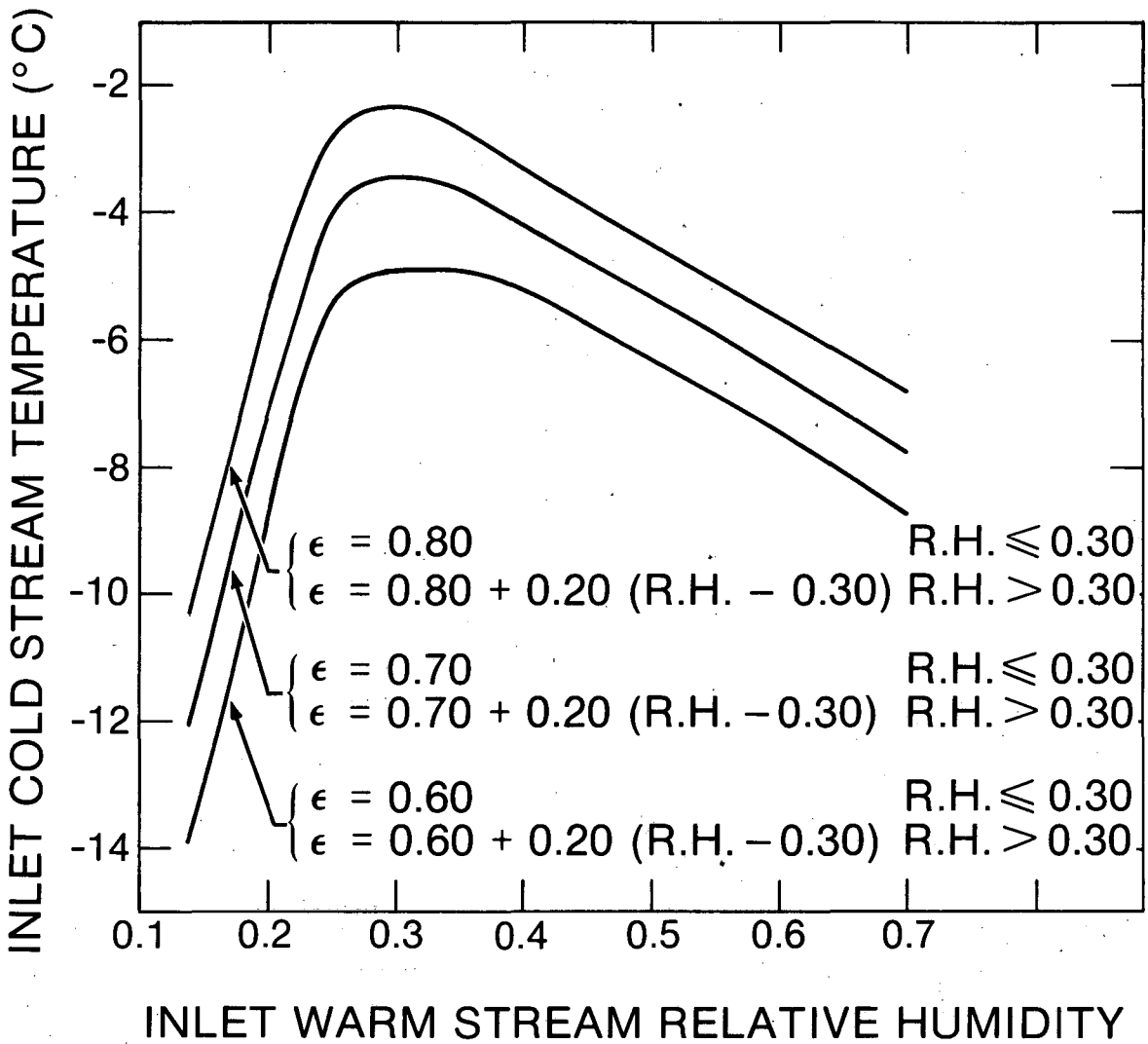

XBL 8310-887

Figure 6. Predicted temperature at onset of freezing versus humidity and temperature efficiency for counterflow heat exchanger. The convective heat transfer coefficients for the warm and cold airstreams were assumed to be equal. The inlet temperature of the warm airstream was assumed to equal 20°C. ϵ is the temperature efficiency of the heat exchanger.

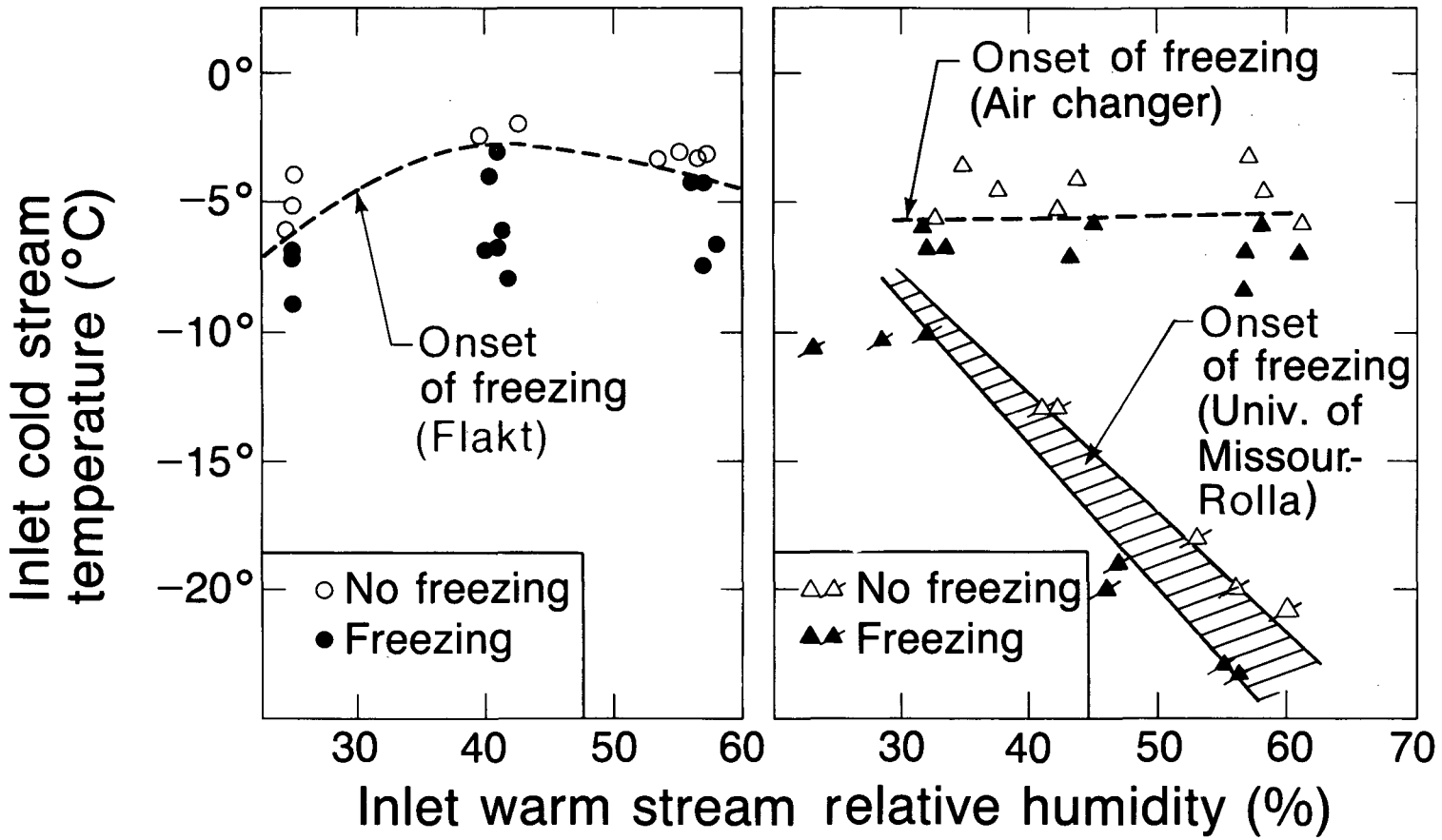

XBL 839-3294

Figure 7. Results of tests to determine the onset of freezing for the Flakt and Air Changer heat exchangers plus results from previous tests with a counterflow heat exchanger at the University of Missouri - Rolla by Sauer et.al. (1981).

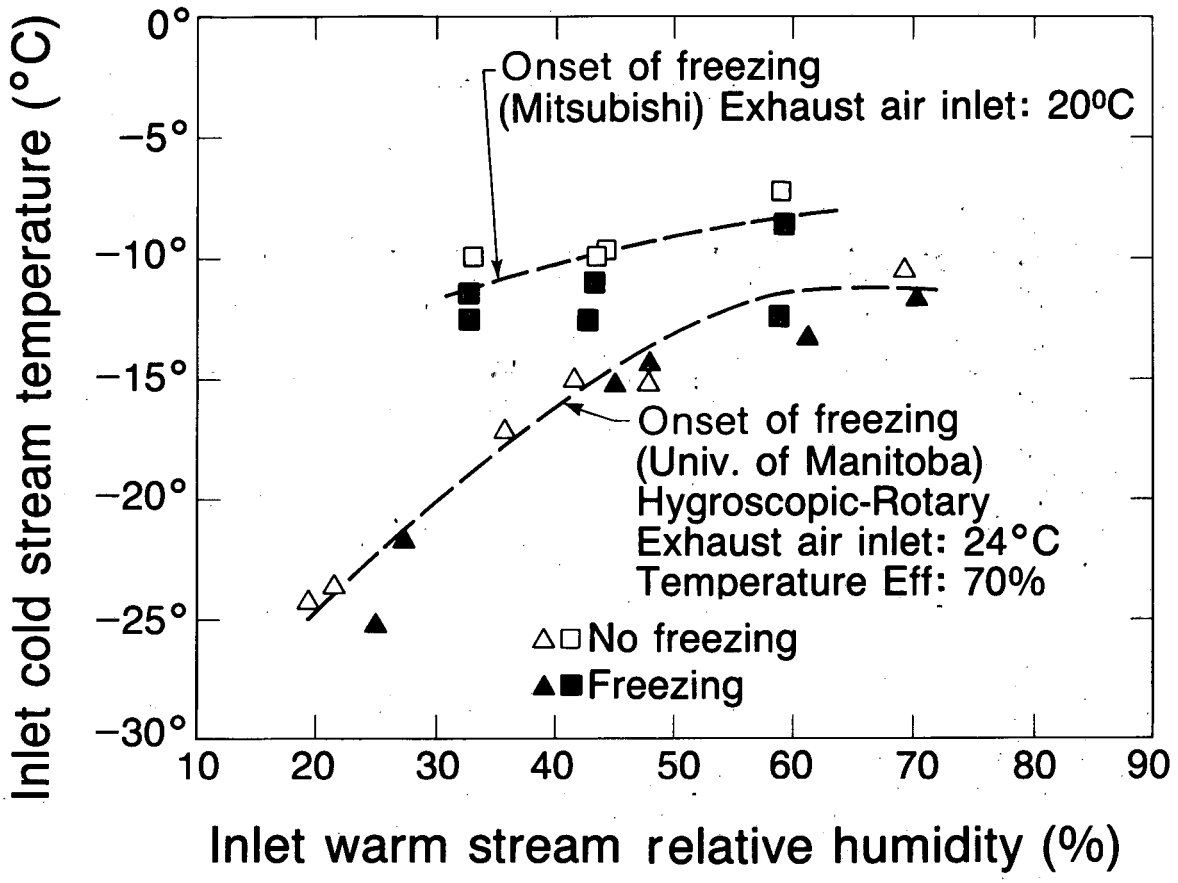

XBL 839-3289

Figure 8. Results of tests to determine the onset of freezing for the Mitsubishi VL-1500 core plus data from a previous study of a hygroscopic-rotary exchanger at the University of Manitoba by Ruth et.al. (1975).

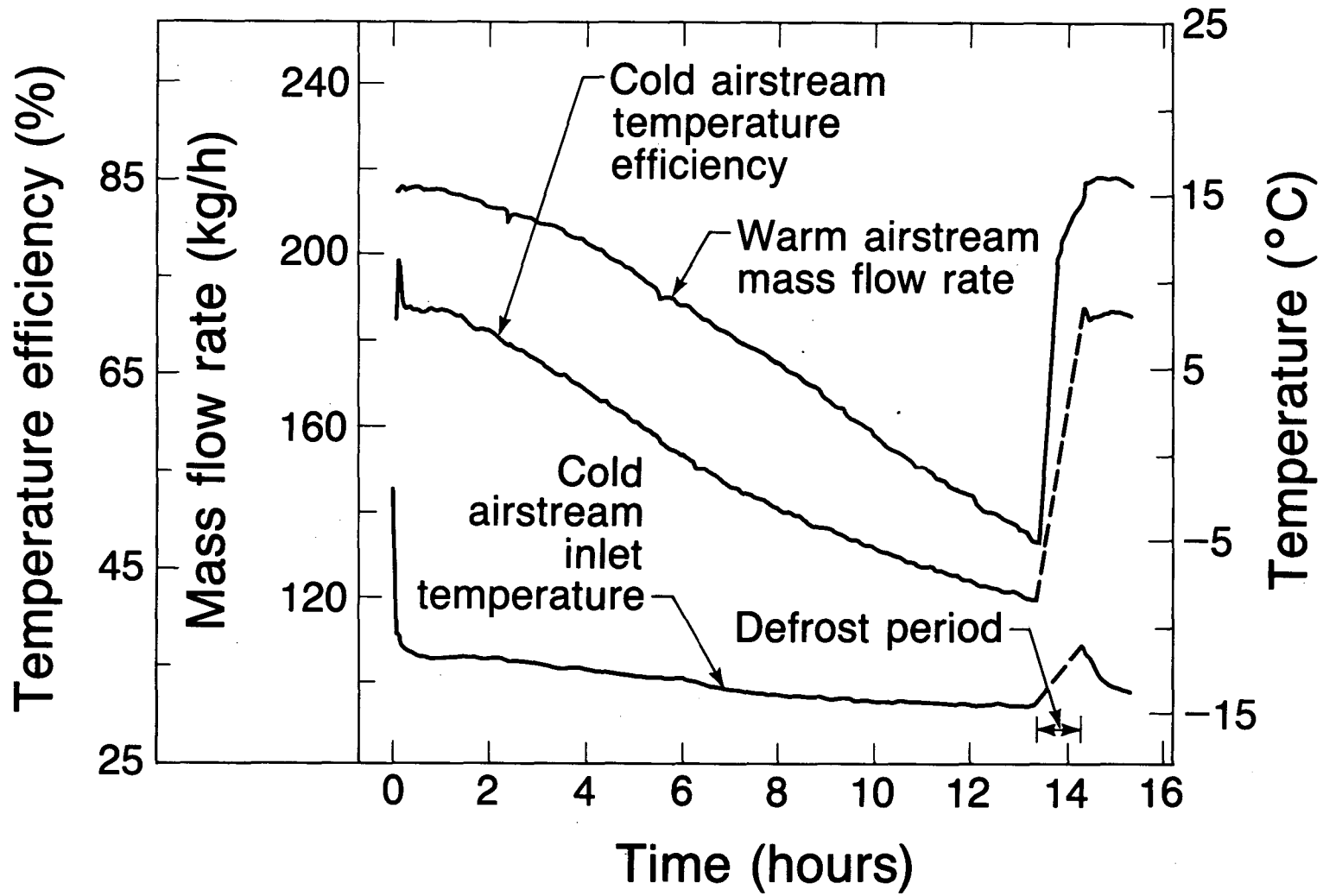

XBL 839-3286

Figure 9. Mass flow rate of warm airstream, temperature efficiency for cold airstream, and inlet temperature of cold airstream versus time for test No. FL6 of Flakt heat exchanger. The average inlet temperature and relative humidity of the warm airstream were 19.4°C, and 30% respectively. The dashed lines connect data from periods before and after the defrost.

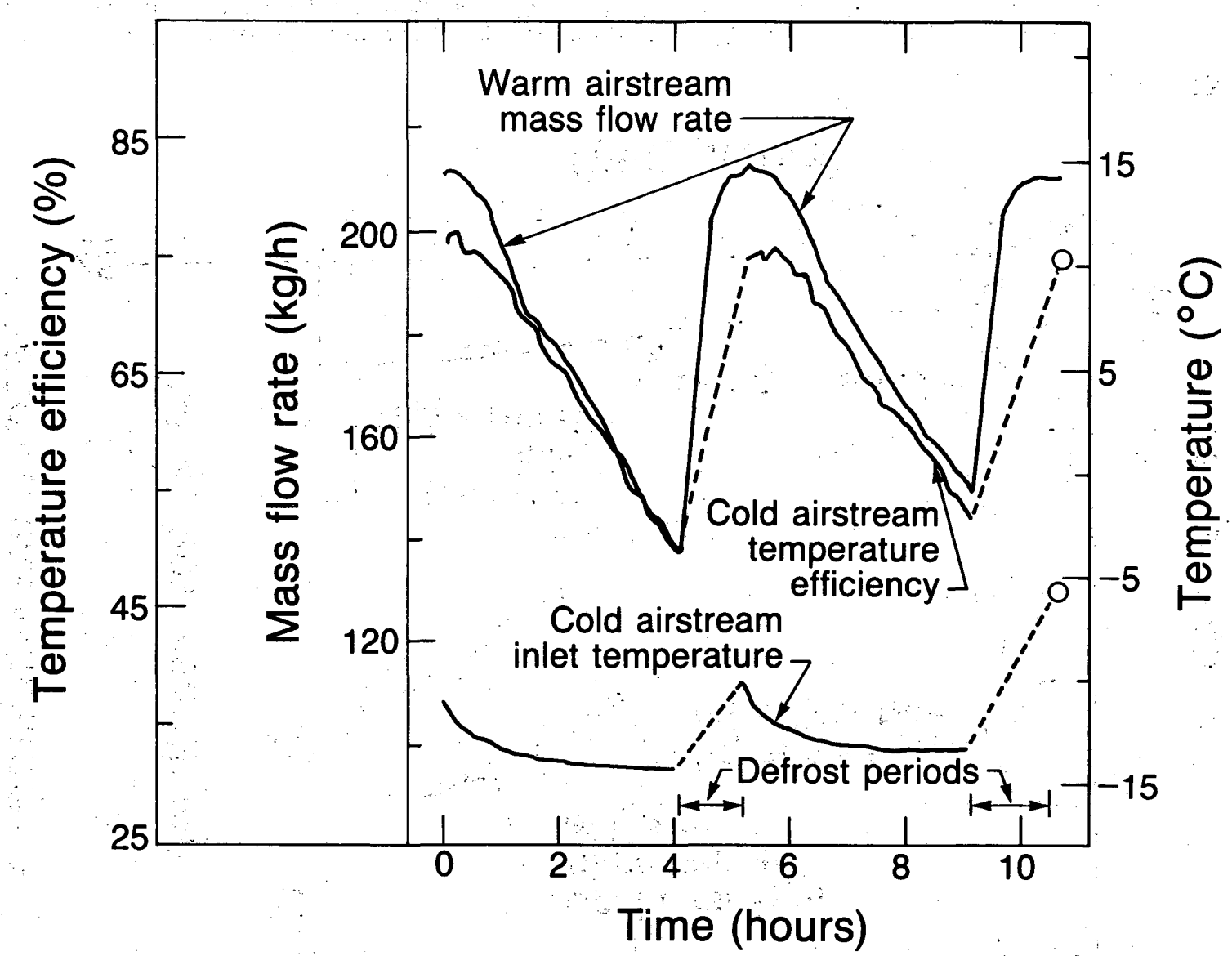

XBL 839-3293

Figure 10. Mass flow rate of warm airstream, temperature efficiency for cold airstream, and inlet temperature of cold airstream for test No. FL-15 of Flakt heat exchanger. The average inlet temperature and relative humidity of the warm airstream were 20.1°C and 55%, respectively. The dashed lines connect data points from periods before and after the defrost.

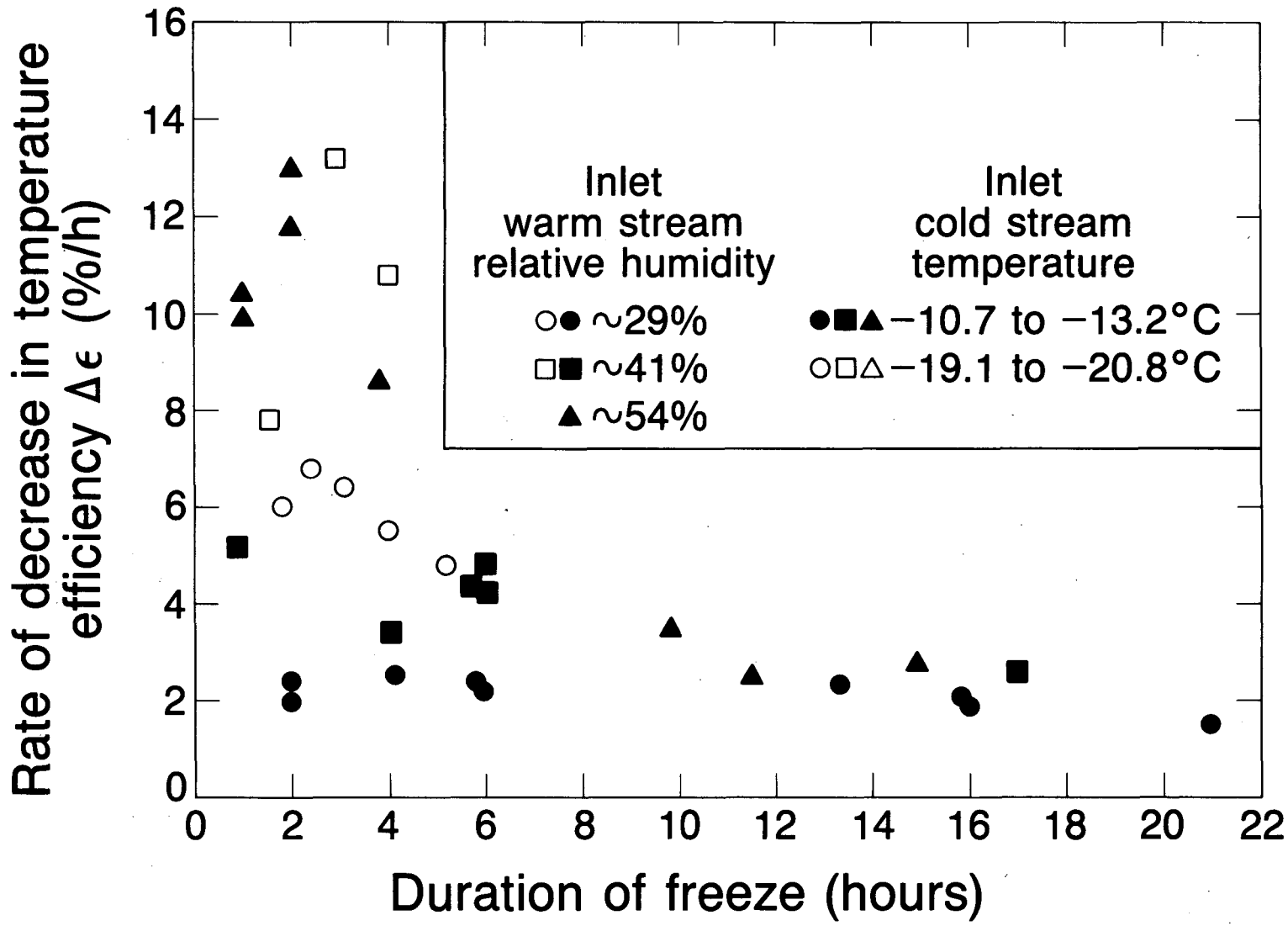

Figure 11. Rate of decrease in temperature efficiency versus duration of the freeze for tests of Flakt heat exchanger.

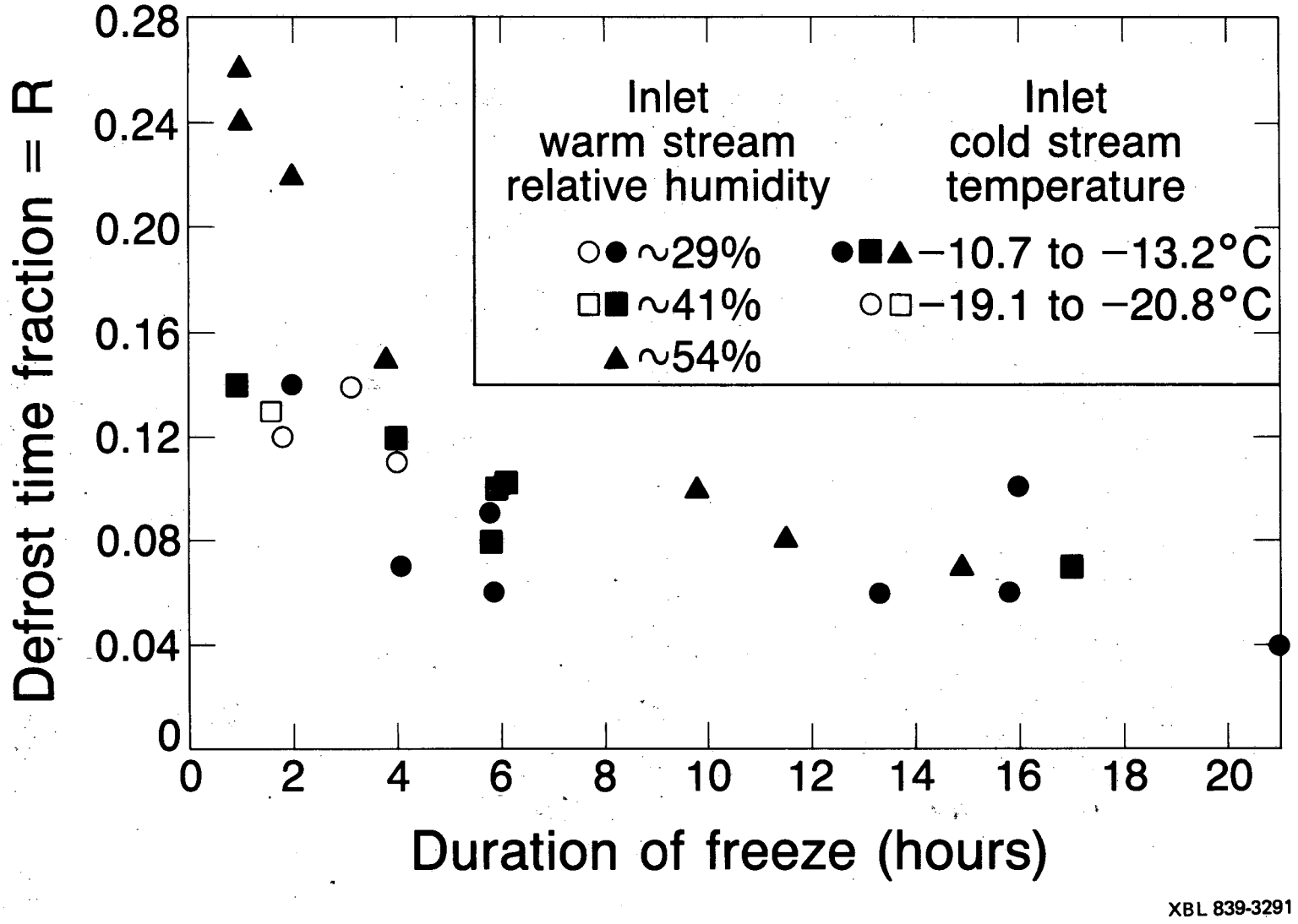

Figure 12. Defrost time fraction versus duration of the freeze for tests of Flakt heat exchanger.

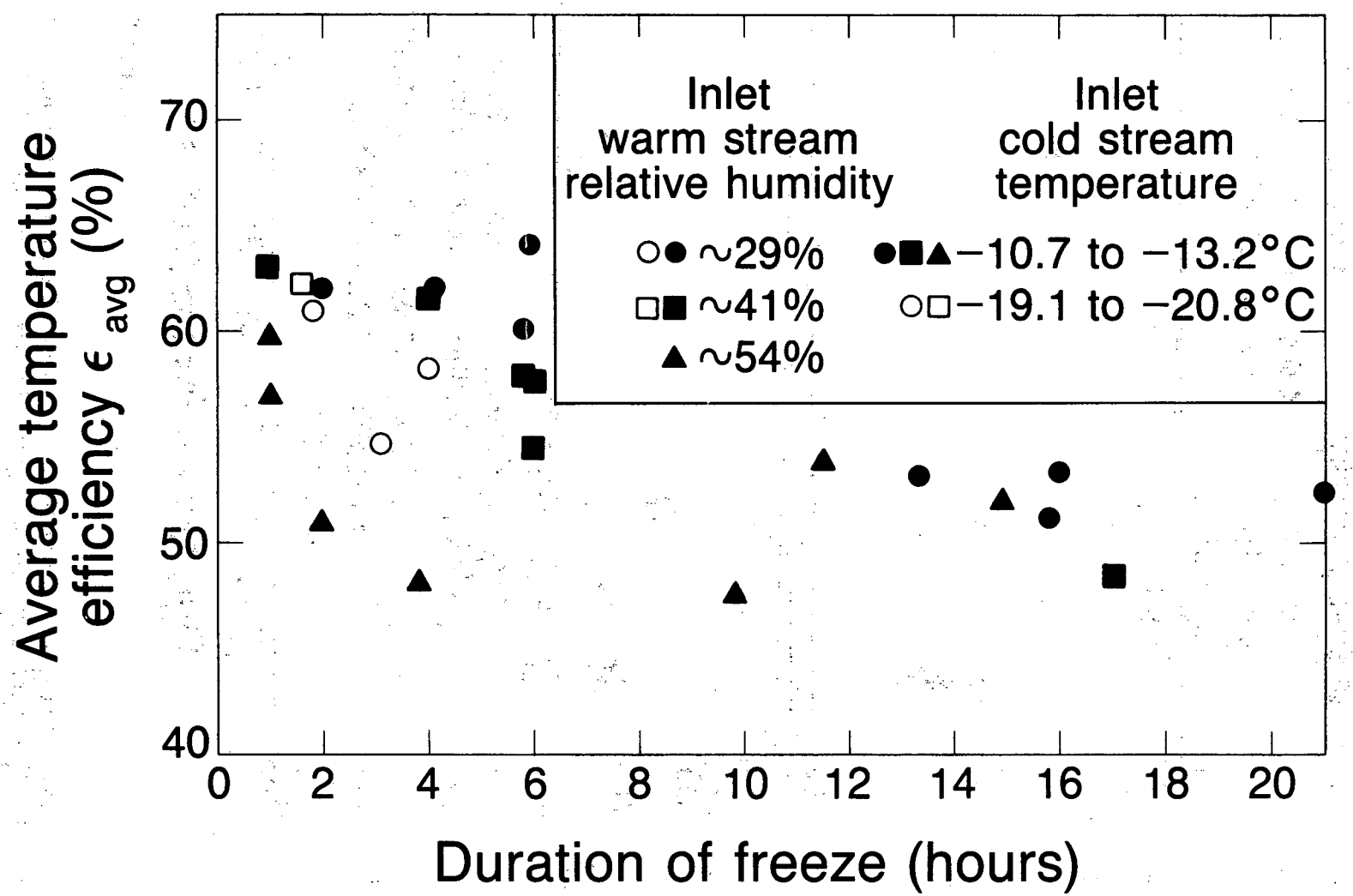

XBL 839-3287

Figure 13. Average temperature efficiency versus duration of freeze for tests of Flakt heat exchanger.

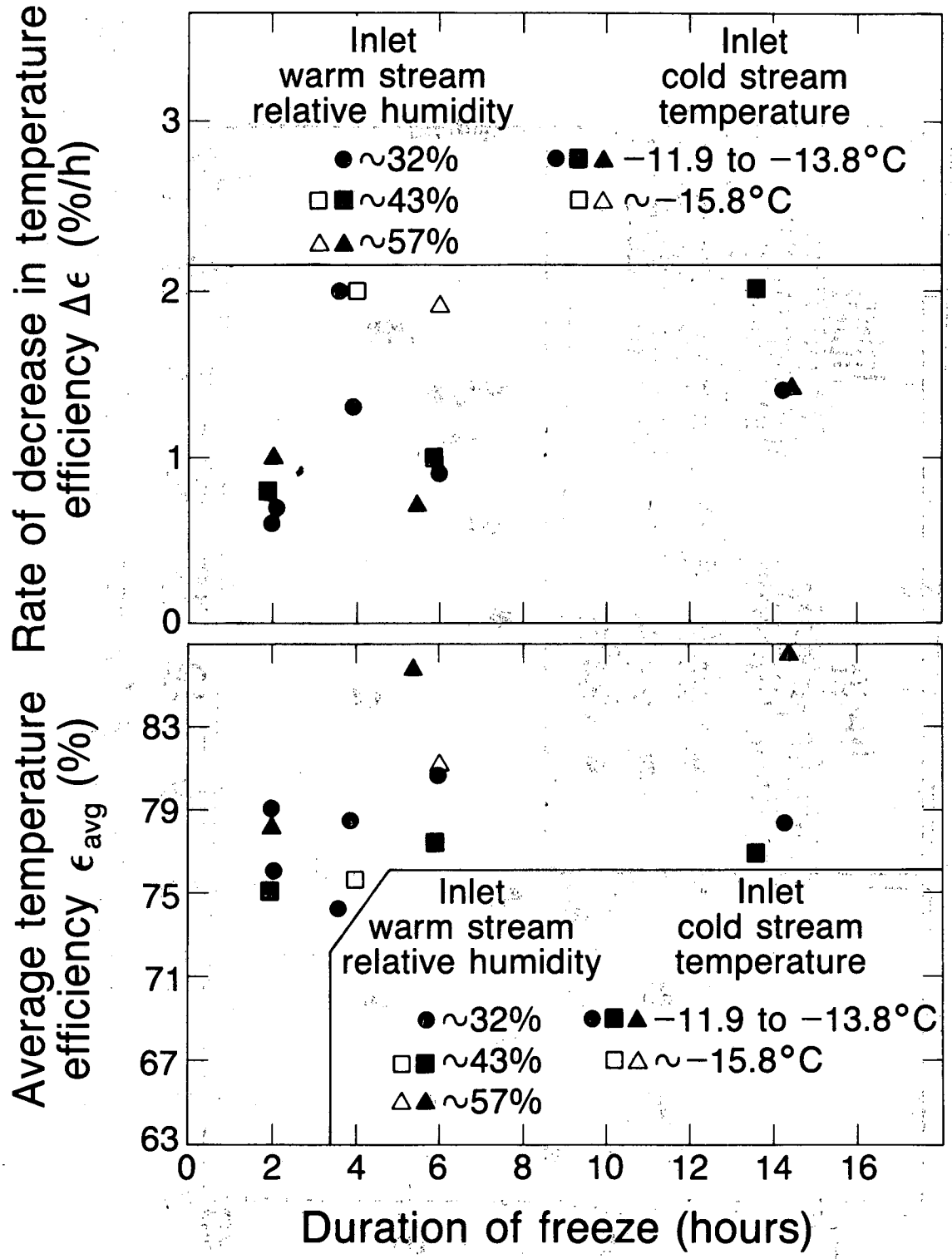

Figure 14. Rate of decreases in temperature efficiency and average temperature efficiency versus duration of the freeze for tests of Air Changer heat exchanger.

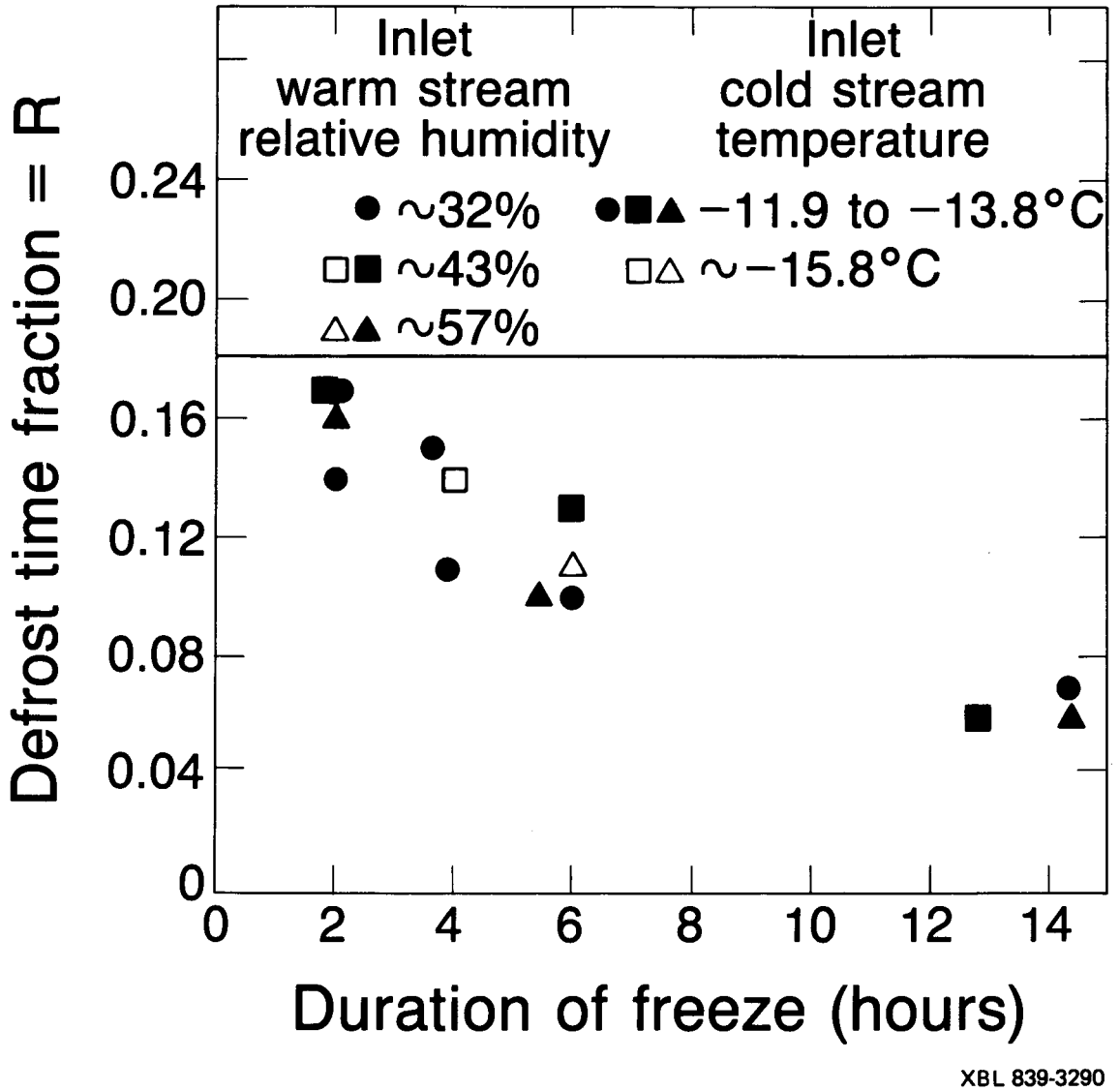

Figure 15. Defrost time fraction versus duration of freeze for tests of Air Changer heat exchanger.

This report was done with support from the Department of Energy. Any conclusions or opinions expressed in this report represent solely those of the author(s) and not necessarily those of The Regents of the University of California, the Lawrence Berkeley Laboratory or the Department of Energy.

Reference to a company or product name does not imply approval or recommendation of the product by the University of California or the U.S. Department of Energy to the exclusion of others that may be suitable.

TECHNICAL INFORMATION DEPARTMENT
LAWRENCE BERKELEY LABORATORY
UNIVERSITY OF CALIFORNIA
BERKELEY, CALIFORNIA 94720

AAG712
LBL Libraries