LBL-16966 c.2
Preprint

Lawrence Berkeley Laboratory

UNIVERSITY OF CALIFORNIA

RECEIVED
LAWRENCE
BERKELEY LABORATORY

MAR 14 1984

LIBRARY AND
DOCUMENTS SECTION

Materials & Molecular Research Division

To be submitted to the Journal of Applied Physics

FREE CARRIER LIFETIME IN SEMI-INSULATING GaAs FROM TIME-RESOLVED BAND-TO-BAND PHOTOLUMINESCENCE

J.S. Weiner and P.Y. Yu

January 1984

TWO-WEEK LOAN COPY

This is a Library Circulating Copy which may be borrowed for two weeks. For a personal retention copy, call Tech. Info. Division, Ext. 6782.

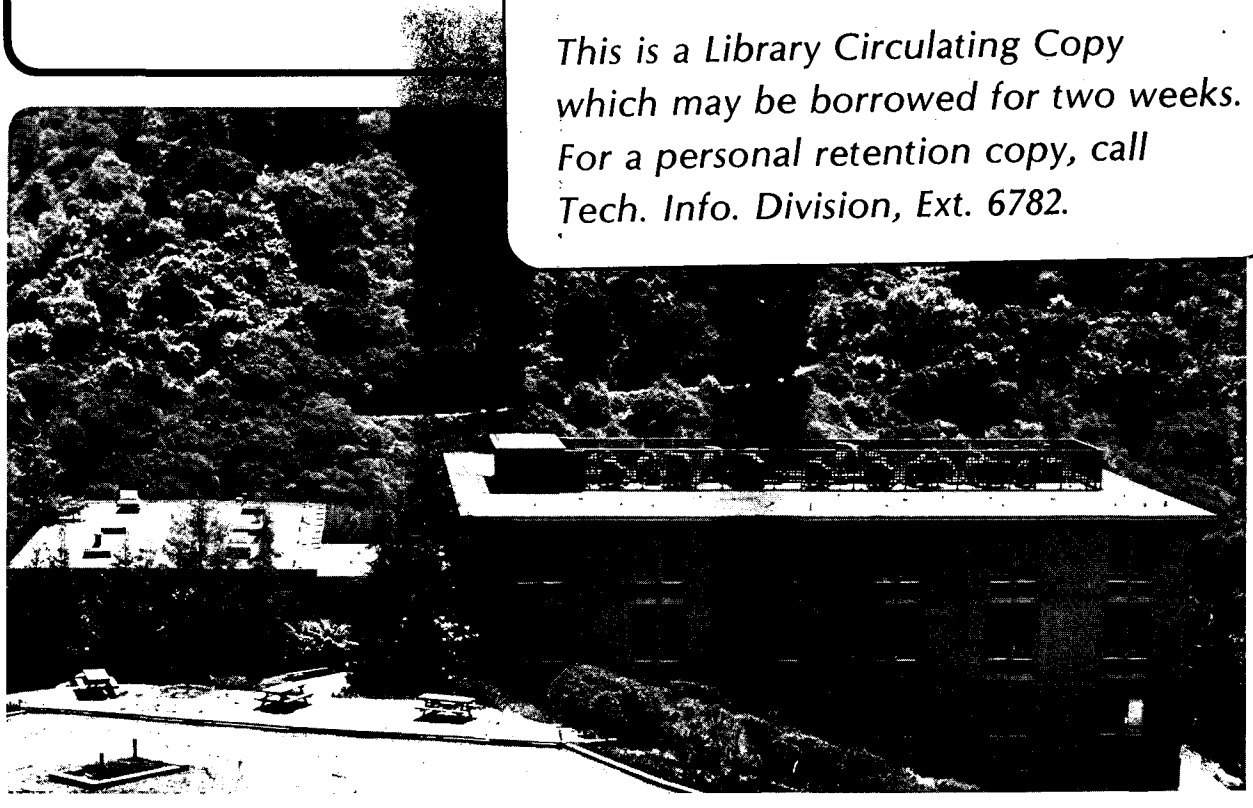

LBL-16966 c.2

Prepared for the U.S. Department of Energy under Contract DE-AC03-76SF00098

DISCLAIMER

This document was prepared as an account of work sponsored by the United States Government. While this document is believed to contain correct information, neither the United States Government nor any agency thereof, nor the Regents of the University of California, nor any of their employees, makes any warranty, express or implied, or assumes any legal responsibility for the accuracy, completeness, or usefulness of any information, apparatus, product, or process disclosed, or represents that its use would not infringe privately owned rights. Reference herein to any specific commercial product, process, or service by its trade name, trademark, manufacturer, or otherwise, does not necessarily constitute or imply its endorsement, recommendation, or favoring by the United States Government or any agency thereof, or the Regents of the University of California. The views and opinions of authors expressed herein do not necessarily state or reflect those of the United States Government or any agency thereof or the Regents of the University of California.

To be submitted to the Journal of
Applied Physics

LBL-16966

Free Carrier Lifetime in Semi-insulating GaAs From Time-resolved Band-to-Band Photoluminescence

J. S. Weiner and P. Y. Yu

Department of Physics, University of California
Berkeley, California 94720 and
Materials and Molecular Research Division,
Lawrence Berkeley Laboratory, Berkeley, California 94720

Abstract

Time-resolved band-to-band photoluminescence offers a quick and contactless technique for determining the photoexcited free carrier lifetime in GaAs samples with deep traps.

This research is supported by the Director, Office of Energy Research, Office of Basic Energy Sciences, Materials Science Division of the U.S. Department of Energy under Contract Number DE-AC03-76SF00098.

Recently GaAs and related semiconductors have been widely studied as fast photodetectors [1] for optical communication and as fast optoelectronic switches.[2] In both applications it was found necessary to decrease the photoexcited carrier lifetime to achieve the fast response time. This has been accomplished by introducing deep centers such as Cr into GaAs and Fe into InP.[3] The carrier lifetime is then determined by fabricating the sample into a photoconductor. This process typically requires putting contacts on the sample which then becomes part of a transmission line. The detector is excited by a picosecond laser and the photoresponse measured by a sampling oscilloscope or other sampling techniques. This technique of determining the photoexcited carrier lifetime is time consuming and it is difficult to screen a large number of samples to select one with the desirable response time. In addition, the detector response can be distorted if the incident intensity is too high[4] or if the detector impedance is not well-matched to the transmission line.[5] It is therefore desirable to find a quicker and contactless technique which can determine the photoexcited free carrier lifetime. In this paper we demonstrate how this can be accomplished by measuring the time-resolved photoluminescence with a delayed coincidence photon counting system. This technique is non-destructive and has good spatial resolution. In addition its high sensitivity and good signal-to-noise ratio makes it possible to distinguish between the different processes which determine the carrier lifetime.

The experimental setup necessary for performing the time-resolved photoluminescence measurement is shown schematically in Fig. 1. The actively modelocked Ar^+ laser produces a continuous train of ~ 200 psec long pulses at ~ 12 nsec intervals. The dye laser is modelocked

automatically when its cavity length is matched to that of the Ar^+ laser. The dye used in this case is Styryl 9 so that the dye laser wavelength is tunable over the band gap of GaAs. The dye laser pulses are estimated to be ~10 psec long from the spectral width of the dye laser output. The samples are mounted in a Janis supervaritemp optical dewar. The sample temperature as measured by a thermocouple is maintained at ~40°K. The results in this paper have been obtained by exciting the sample with photons of 1.56eV energy. The energy per dye laser pulse is $\lesssim$ 1nJ. The dye laser is focussed into a spot ~100μm in diameter on the sample. The photo-excited free carrier concentration is estimated to be $\lesssim 2\times10^{15}cm^{-3}$. The sample emission is first analyzed by a Spex 1403 double spectrometer, although a single monochromator with less resolution would have been quite sufficient for this experiment. It is then detected by a delayed coincidence photon counting system consisting of a Amperex PM2254B photomultiplier tube, a constant fraction discriminator, a time-to-amplitude converter and a multi-channel analyzer. The overall instrumental width is ~400 psec. Since the number of photons emitted by GaAs, even with the deep traps, is quite high we can determine luminescence decay times as short as 100 psec by deconvolution techniques. Decay times shorter than 50 psec can be measured reliably by this technique by using photomultiplier tubes with faster rise time or by using streak cameras. The disadvantage of the streak camera compared to the present system is its high cost and lower sensitivity.

We have performed measurements on five different GaAs samples. A summary of the properties of these GaAs samples can be found in Table 1.

In Figure 2 we show the time-integrated photoluminescence spectrum of

Cr doped GaAs (sample #1). The structure of interest to us is the dominant peak at ~12200cm^{-1}. We have identified this peak as due to band-band recombination of photoexcited electron-hole pairs from its photon energy and from the dependence of its intensity on temperature and laser power. This peak is found in all of our samples. The time decay of this peak is shown in Fig. 3 (a), (b) and (c) for samples #5, 1 and 3. In all three spectra the curve labelled 'laser' represents the instrument response. In all three cases we found that the decay of the band-band recombination is slower than the instrumental response curve indicating that the recombination has a finite decay time.

There are a number of processes which can cause the photoexcited carriers to decay in time. These include: (i) radiative recombination, (ii) auger recombination, (iii) trapping and subsequent recombination at impurities and defects, (iv) surface recombination and (v) diffusion of carriers away from the region of observation.

Of these processes radiative recombination has been studied extensively in GaAs[6] and measured radiative lifetimes in GaAs ranged from ~1nsec in heavily doped samples ($\gtrsim 10^{19}$cm^{-3}) to as long as ~1μsec in undoped samples. Since our samples all have moderate or low doping densities and the photoexcited free carrier density is also low in our experiment, we conclude that radiative recombination cannot explain the short lifetime observed in the semi-insulating samples. Similarly, auger processes are important only when the carrier densities are higher than 10^{19}cm^{-3} so we do not expect them to be important in our samples.[7]

We have therefore interpreted our results with a simple model which includes the remaining three processes. In this model we assume that the

medium is semi-infinite with the sample surface located at the z=0 plane. The carrier concentration is assumed to depend only on time, t, and z. The concentration of the electron-hole pairs, N(z,t), is then given by the diffusion equation:

$$\frac{\partial N}{\partial t} = G(z,t) + D\frac{\partial^2 N}{\partial z^2} - \frac{N}{\tau} \tag{1}$$

where G(z,t) is the generation rate due to the incident laser, D is the ambipolar diffusion constant, and τ is the bulk recombination time due to trapping at defects and impurities. Equation (1) has to be solved subject to the boundary conditions that:

$$D\left.\frac{\partial N}{\partial z}\right|_{z=0} = N(0,t)S \quad \text{and} \quad N(\infty,t) = 0 \tag{2}$$

where S is the surface recombination velocity. We will assume that the incident laser pulse is a delta-function in time so that G(z,t) is given by:

$$G(z,t) = N_o\delta(t)e^{-\alpha_i z} \tag{3}$$

where α_i is the absorption coefficient of GaAs at the incident laser frequency. The time-dependent emission intensity can be calculated from N(z,t) via the expression:

$$I_e(t) \propto \int_0^\infty e^{-\alpha_e z} N(z,t)\, dz \tag{4}$$

where α_e is the absorption coefficient at the emission frequency. It has been shown that $I_e(t)$ is given by:[8]

$$I_e(t) \propto e^{-t/\tau}[A_1 W(\alpha_i\sqrt{Dt}) + A_2 W(\tfrac{S}{D}\sqrt{Dt}) + A_3 W(\alpha_e\sqrt{Dt})] \tag{5}$$

where

$$A_1 = \frac{\alpha_e}{\alpha_e^2-\alpha_i^2} + (\frac{2S}{D})(\frac{S}{D} -\alpha_i)^{-1}(\alpha_i-\alpha_e)^{-1} \tag{6}$$

$$A_2 = (\frac{2S}{D})(\frac{S}{D} -\alpha_i)^{-1}(\alpha_e - \frac{S}{D})^{-1} \tag{7}$$

$$A_3 = 2(\alpha_i+\alpha_e)^{-1} - (A_1+A_2) \tag{8}$$

and $W(x) = \exp(x^2)\mathrm{erfc}(x)$, erfc being the complementary error function.

In Eq. 5 the term outside the bracket is a simple exponential decay with decay time τ. The terms inside the bracket are significant only when S and D are both large. Since these terms lead to non-exponential decays, the surface recomination and diffusion terms can be readily distinguished from the bulk recombination term.

We have tried to fit our results in Fig. 3 by convoluting Eq. 5 with the instrument response. In all three cases we found that the experimental curves can be fitted best if S and D are assumed to be negligible. Significantly worse fits are obtained if we assume that S and D have values typically quoted in the literature.[9] For example the broken curve in Fig. 3(b) is calculated by assuming $D = 10\mathrm{cm}^2/\mathrm{sec}$, $S = 10^6\mathrm{cm/sec}$ and $\tau = 300$ psec while the dots are obtained by assuming $S = D = 0$ and $\tau = 170$ psec. The bulk recombination times obtained for all five GaAs samples are listed in Table 1. The shortest lifetimes that we determine in the semi-insulating samples are consistent with transient photoconductivity measurements reported in Cr doped GaAs.[1]

By comparing the free carrier lifetime in the pure GaAs sample with those in the semi-insulating samples we conclude that the free carrier lifetimes in the semi-insulating samples are limited by trapping at the deep centers in those samples. In principle if the trap concentrations

in our samples are known, one can calculate the trapping cross section from the measured τ by assuming that:

$$\tau^{-1} = N_t \langle v \rangle \sigma \tag{9}$$

where σ is the trapping cross section (for electron or hole) $\langle v \rangle$ is the thermal velocity of the carrier trapped and N_t is the trap concentration. The fact that the measured lifetime in samples #1 and #2 is not inversely proportional to the known Cr concentration suggests that the actual numbers of traps in our samples are different from their Cr concentrations. Thus to determine σ with this technique requires a more reliable measurement of the trap density.

This research is supported by the Director, Office of Energy Research, Office of Basic Energy Sciences, Materials Sciences Division of the U.S. Department of Energy under Contract Number DE-AC03-76SF00098. We are grateful to Professor P. W. Yu of Wright State University and to Hewlett-Packard of Palo Alto for providing us with the GaAs samples.

Table I

GaAs Samples Used in this Work

Sample	Dopant & Concentration	Other Characteristics	τ(psec)
#1[a]	Cr: $10^{15}cm^{-3}$		170
#2[a]	Cr: $2\times10^{16}cm^{-3}$		~90
#3[a]	Cr: $1.6\times10^{17}cm^{-3}$		$\lesssim$90
#4[b]	O; $6\times10^{17}cm^{-3}$	LEC Grown	250
#5[b]	undoped, $N_A,N_D < 10^{14}cm^{-3}$	4μ thick epi-layer on semi-insulating substrate	1200

(a) Obtained from Wright State University, Dayton, Ohio.

(b) Obtained from Hewlett-Packard, Palo Alto, CA.

References

1. C.H. Lee, Appl. Phys. Lett. 30, 84 (1977); C.H. Lee, A. Antonetti and G. Mourou, Opt. Commun. 21, 158 (1977).
2. See for example G. Mourou and W. Knox, Appl. Phys. Lett. 35, 492 (1979).
3. R. B. Hammond, N.G. Paulter, A.E. Iverson and R.C. Smith, Proc. Intl. Elect. Devices Mtg., p. 157 (1981); F.J. Leonberger and P.F. Moulton, Appl. Phys. Lett. 35, 712 (1979).
4. See for example K.K. Li, Ph.D. Thesis (U. of California, Berkeley, 1982, unpublished).
5. B. Hwang, F.A. Lindholm, and R.B. Hammond, IEEE J. Quant. Elect. QE-19, 648 (1983).
6. R.J. Nelson and R.G. Sobers, J. Appl. Phys. 49, 6103 (1978).
7. W. Rosenthal, Solid State Commun. 13, 1215 (1973).
8. J. Vaitkus, Phys. Stat. Solidi 34, 769 (1976).
9. C. Hoffman, H.J.Gerritsen and A.V. Nurmikko, J. Appl. Phys. 51, 1603 (1980).

Figure Captions

Fig. 1: Experimental setup for measuring time-resolved photoluminescence. CFD-constant fraction discriminator, TAC-time to amplitude converter. PHA-pulse height analyzer.

Fig. 2: Time-integrated luminescence spectrum of Cr doped GaAs (sample #1). The main peak at 12,200cm^{-1} is identified as due to band-band recombination of electron-hole pairs.

Fig. 3: Time-dependent decay of the band to band luminescence in (a) undoped GaAs (sample #5), (b) GaAs doped with $10^{15}cm^{-3}$ of Cr (sample #1), and (c) GaAs doped with $1.6\times10^{17}cm^{-3}$ of Cr (sample #3). The dots are best fits obtained by convolution of the instrument response (curves labelled as laser) with Eq. 5 assuming S=D=0, and lifetimes given in Table 1. In (b) the broken curve was similarly obtained using $D=10cm^2/sec$, $S=10^6cm/sec$, and $\tau=300$ psec.

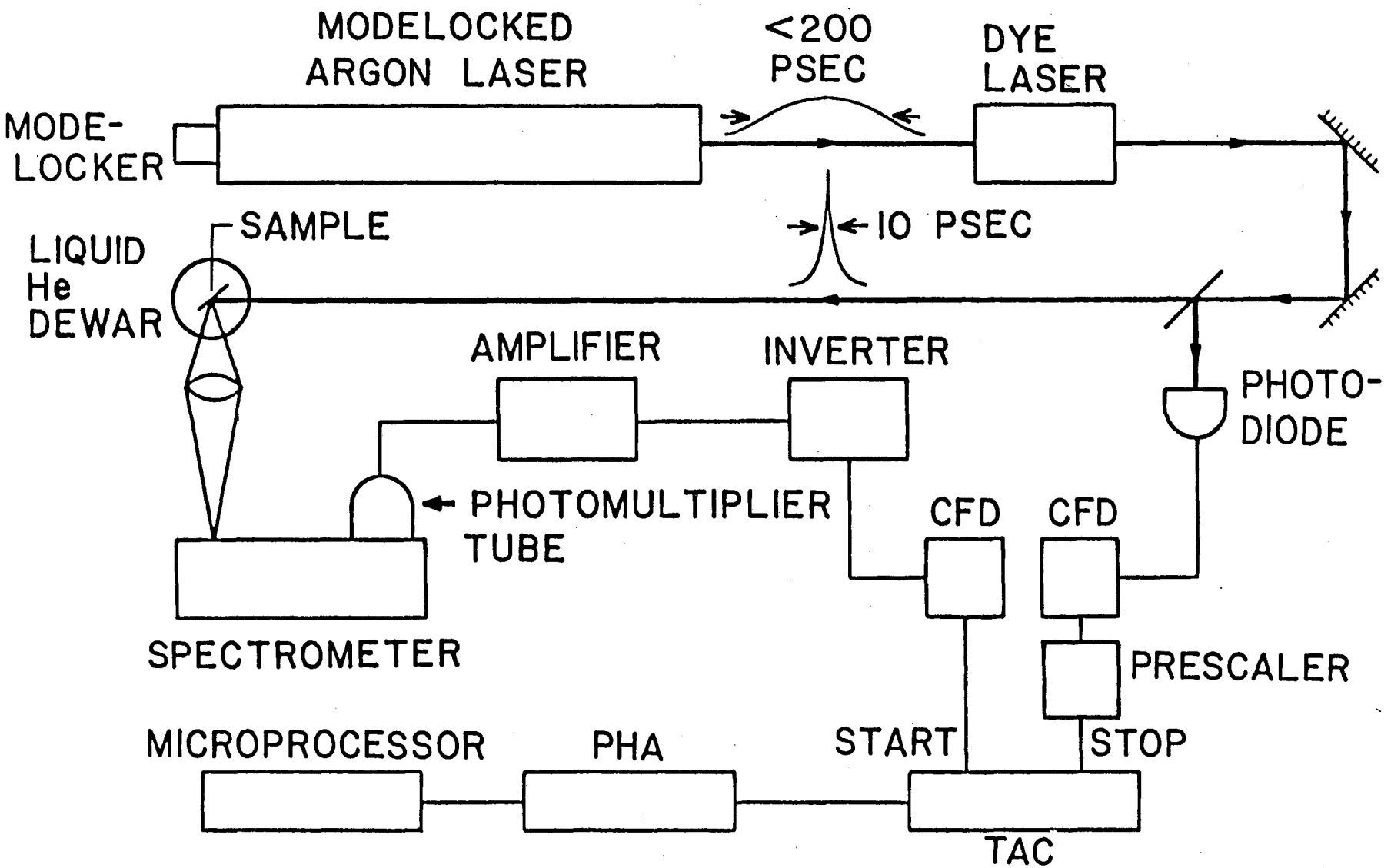
MODELOCKED
ARGON LASER
<200
PSEC
DYE
LASER
MODE-
LOCKER
SAMPLE
10 PSEC
LIQUID
He
DEWAR
AMPLIFIER
INVERTER
PHOTO-
DIODE
PHOTOMULTIPLIER
TUBE
CFD
CFD
SPECTROMETER
PRESCALER
MICROPROCESSOR
PHA
START
STOP
TAC

Fig. 1

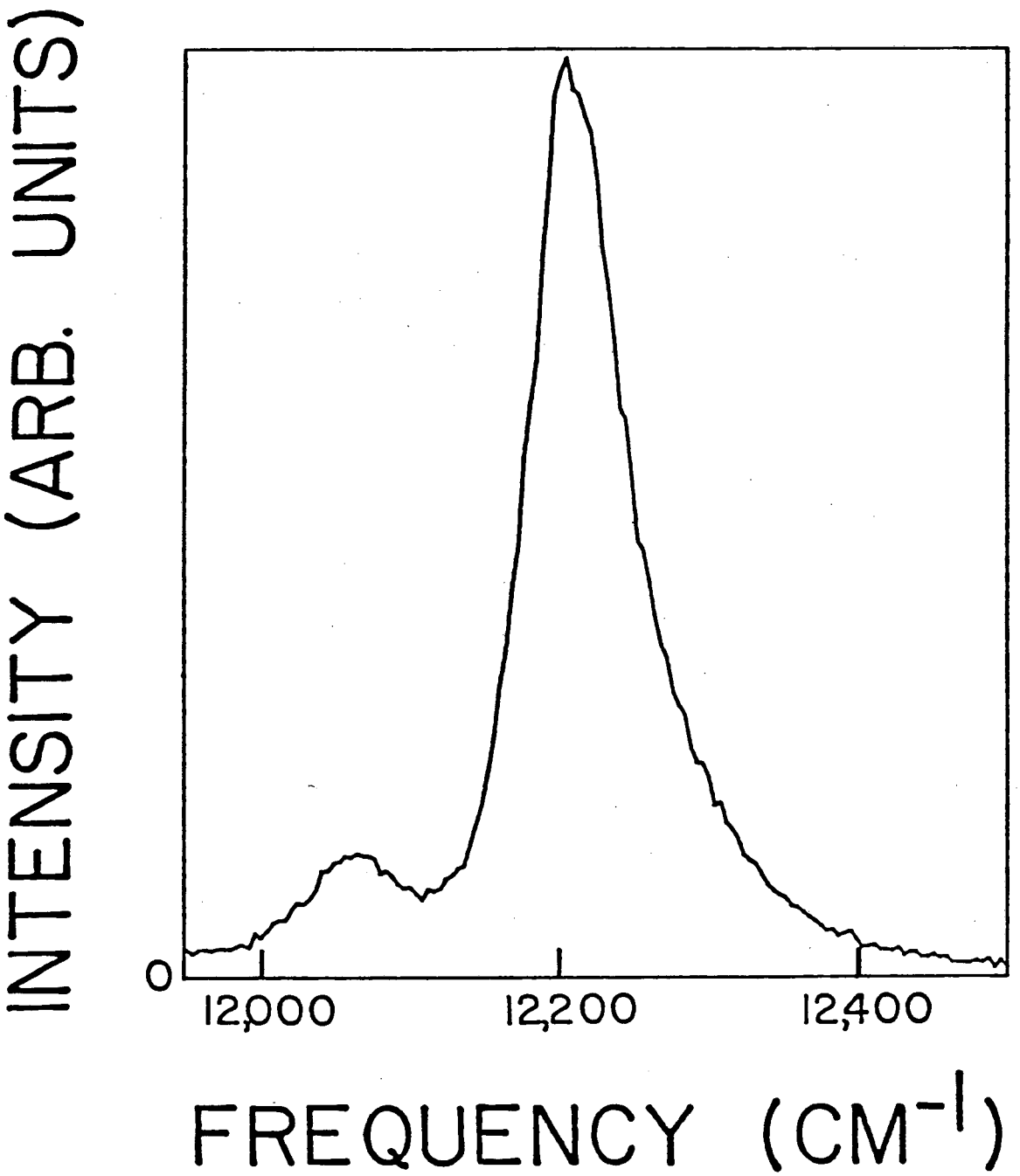

Fig. 2

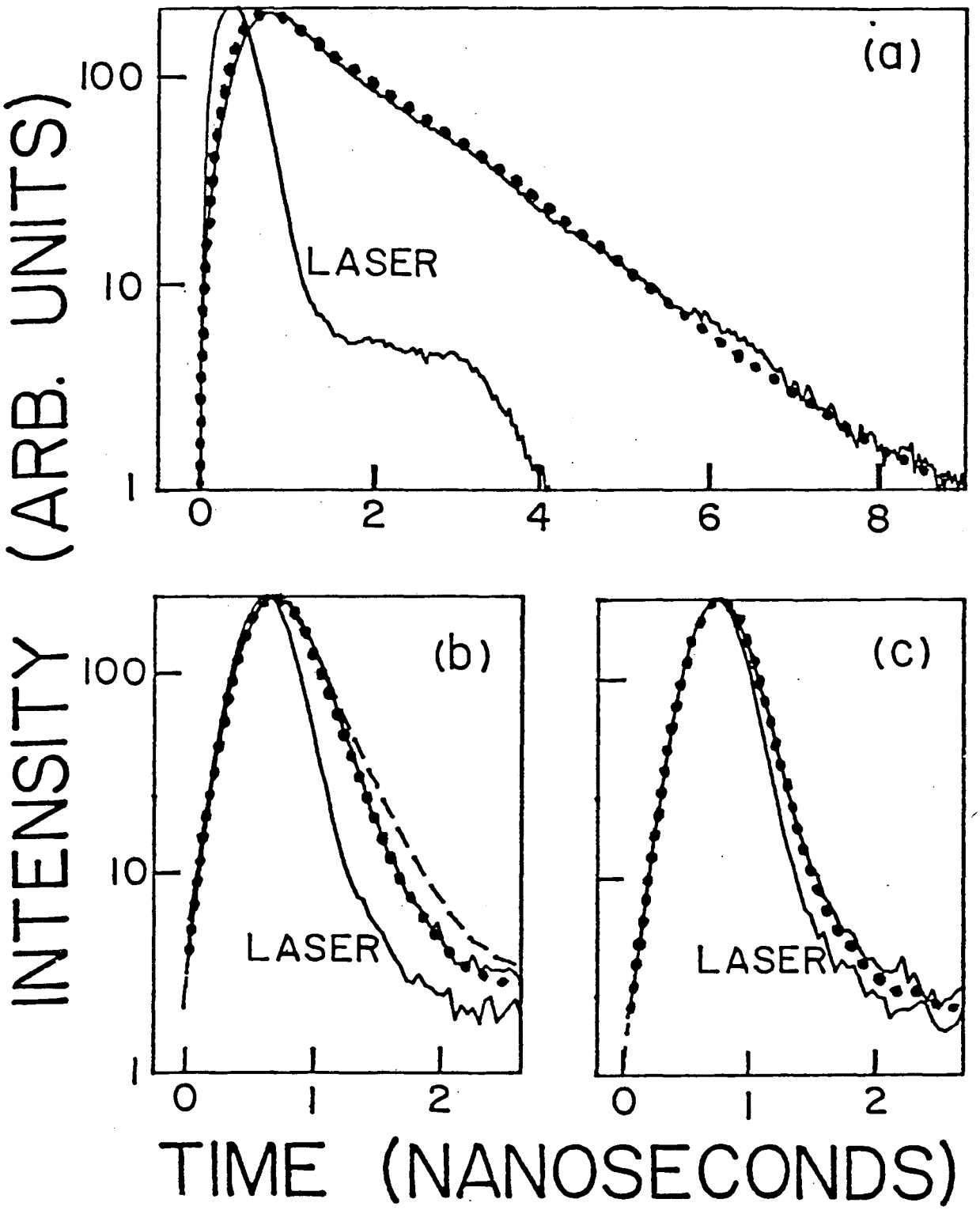
(a)
100
10
1
LASER
0
2
4
6
8
INTENSITY (ARB. UNITS)
(b)
100
10
1
LASER
0
1
2
(c)
LASER
0
1
2
TIME (NANOSECONDS)

Fig. 3

This report was done with support from the Department of Energy. Any conclusions or opinions expressed in this report represent solely those of the author(s) and not necessarily those of The Regents of the University of California, the Lawrence Berkeley Laboratory or the Department of Energy.

Reference to a company or product name does not imply approval or recommendation of the product by the University of California or the U.S. Department of Energy to the exclusion of others that may be suitable.

TECHNICAL INFORMATION DEPARTMENT
LAWRENCE BERKELEY LABORATORY
UNIVERSITY OF CALIFORNIA
BERKELEY, CALIFORNIA 94720