LBL-17814
Preprint c.2

Lawrence Berkeley Laboratory
UNIVERSITY OF CALIFORNIA

EARTH SCIENCES DIVISION

RECEIVED
LAWRENCE
BERKELEY LABORATORY

JUL 24 1984

LIBRARY AND
DOCUMENTS SECTION

Submitted to Water Resources Research

GEOMETRY-IMBEDDED DARCY'S LAW AND TRANSIENT SUBSURFACE FLOW

T.N. Narasimhan

April 1984

TWO-WEEK LOAN COPY
This is a Library Circulating Copy
which may be borrowed for two weeks.

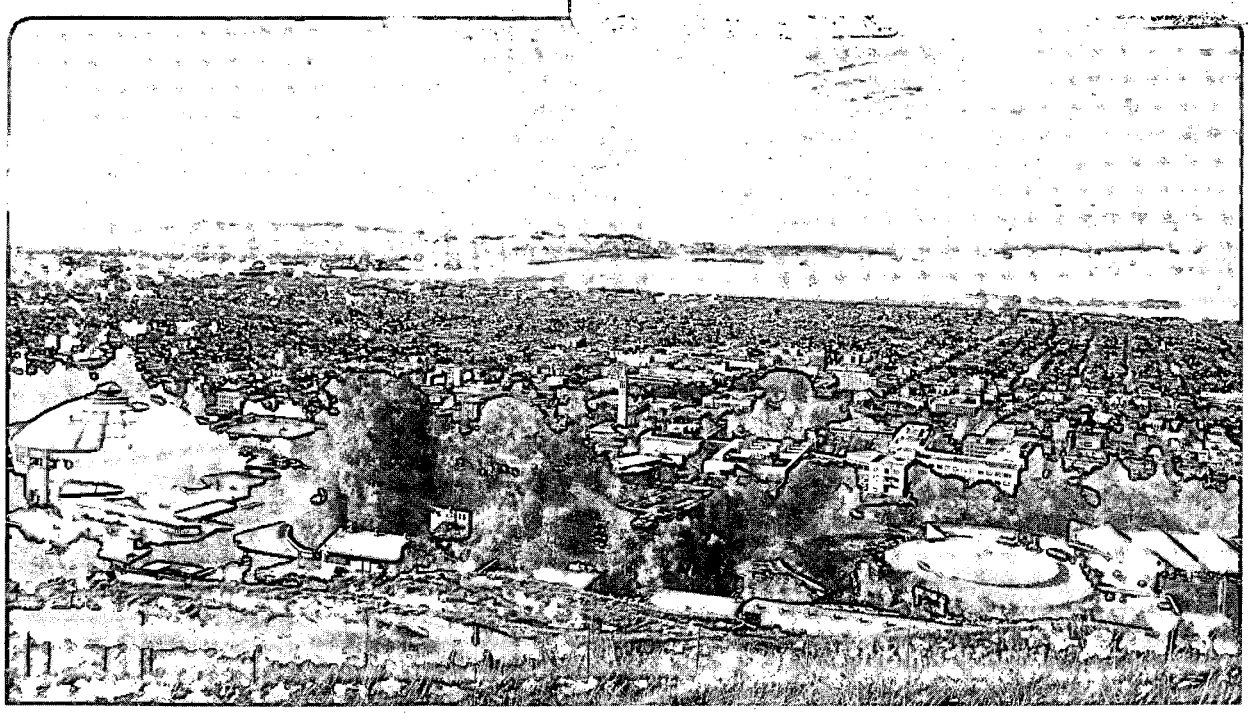

Prepared for the U.S. Department of Energy under Contract DE-AC03-76SF00098

LBL-17814 c.2

DISCLAIMER

This document was prepared as an account of work sponsored by the United States Government. While this document is believed to contain correct information, neither the United States Government nor any agency thereof, nor the Regents of the University of California, nor any of their employees, makes any warranty, express or implied, or assumes any legal responsibility for the accuracy, completeness, or usefulness of any information, apparatus, product, or process disclosed, or represents that its use would not infringe privately owned rights. Reference herein to any specific commercial product, process, or service by its trade name, trademark, manufacturer, or otherwise, does not necessarily constitute or imply its endorsement, recommendation, or favoring by the United States Government or any agency thereof, or the Regents of the University of California. The views and opinions of authors expressed herein do not necessarily state or reflect those of the United States Government or any agency thereof or the Regents of the University of California.

LBL-17814

GEOMETRY-IMBEDDED DARCY'S LAW AND TRANSIENT SUBSURFACE FLOW

T. N. Narasimhan

Earth Sciences Division
Lawrence Berkeley Laboratory
University of California
Berkeley, California 94720

This work was supported by the Director, Office of Energy Research, Office of Basic Energy Sciences, Division of Engineering, Mathematics and Geosciences of the U. S. Department of Energy under Contract No. DE-AC03-76SF00098.

GEOMETRY-IMBEDDED DARCY'S LAW AND TRANSIENT SUBSURFACE FLOW

T. N. Narasimhan

Earth Sciences Division
Lawrence Berkeley Laboratory
University of California
Berkeley, California 94720

ABSTRACT

The traditional interpretation of Darcy's experiment views it as a valuable means for setting up the partial differential equation of transient or steady state subsurface fluid flow. In the present work Darcy's observations are viewed from a different perspective, enabling the statement of transient subsurface fluid flow in terms of an equation defined over finite domains of space and time. Two new notions, namely, geometry-imbedding and location of average are introduced. The equation describes transient flow along a flow tube with arbitrarily varying cross section consisting of materials with properties dependent on fluid potential. This equation, based on its own postulates, is fully consistent within itself and exists independently of the classical partial differential equation. This brief report presents preliminary ideas on what appears to be a promising new line of inquiry that departs from the tranditional approach based on continuum mechanics. Further work is in progress.

GEOMETRY-IMBEDDED DARCY'S LAW AND TRANSIENT SUBSURFACE FLOW

T. N. Narasimhan

Earth Sciences Division
Lawrence Berkeley Laboratory
University of California
Berkeley, California 94720

INTRODUCTION

Darcy's classical experiment involved observations on a tube of uniform cross sectional area filled with a homogeneous porous material, through which water was flowing at a steady rate. Darcy found that the flow rate through the tube was directly proportional to the drop in hydraulic head between the ends of the tube and inversely proportional to the length of the tube, L. In order that Darcy's observations may help formulate the differential equation of flow in a porous material, it is customary, in the interpretation of Darcy's experiment, to let the length, L of the tube to tend in the limit to zero. When this is done, Darcy's observations lead to the inference that the flow rate through the tube is directly proportional to the hydraulic gradient.

In the present work, we shall view Darcy's observations from a different perspective, without requiring that L tend in the limit to zero. Accordingly, Darcy's Law is viewed as a statement of the relation between flow rate, potential difference and the geometry of the flow tube. Development of this perspective leads to some interesting insights about how one may formulate and solve the transient subsurface problems by techniques quite independent of the classical differential equation. The purpose of this brief report is to present the

preliminary ideas in this regard. Work in the development of the ideas is still in progress. Narasimhan and Goyal (1981) briefly reported on these ideas in the form of an abstract.

DARCY'S LAW

We consider that Darcy's observations are in general applicable to a flow tube of non-uniform cross sectional area, bounded by surfaces of equal potentials at either end and with impermeable sides (Fig. 1). The flow tube consists of many stream lines and the flow rate through the tube is spatially constant, although the velocity is not. We define the area of cross section of the tube at any given location to be the area of the equipotential surface at that location, which, incidentally is perpendicular to the stream lines. Let us choose any one of the stream lines to form the X axis. Then, the area of cross section of the tube, $A = A(x)$.

If we assume creeping flow and equilibrium of forces, then, the impelling pressure forces on the fluid are exactly balanced within the tube by the sum of frictional forces generated by the flowing Newtonian fluid and the body forces due to the weight of the fluid itself. Then, following Collins (1961), one can show, as demonstrated in Appendix 1, that,

$$Q = \frac{-K(\phi_2 - \phi_1)}{\int_{x_1}^{x_2} \frac{dx}{A(x)}} \qquad (1)$$

where Q is the volumetric flow rate through th tube; K is the hydraulic conductivity of the homogeneous material; ϕ_1 and ϕ_2 are the hydraulic

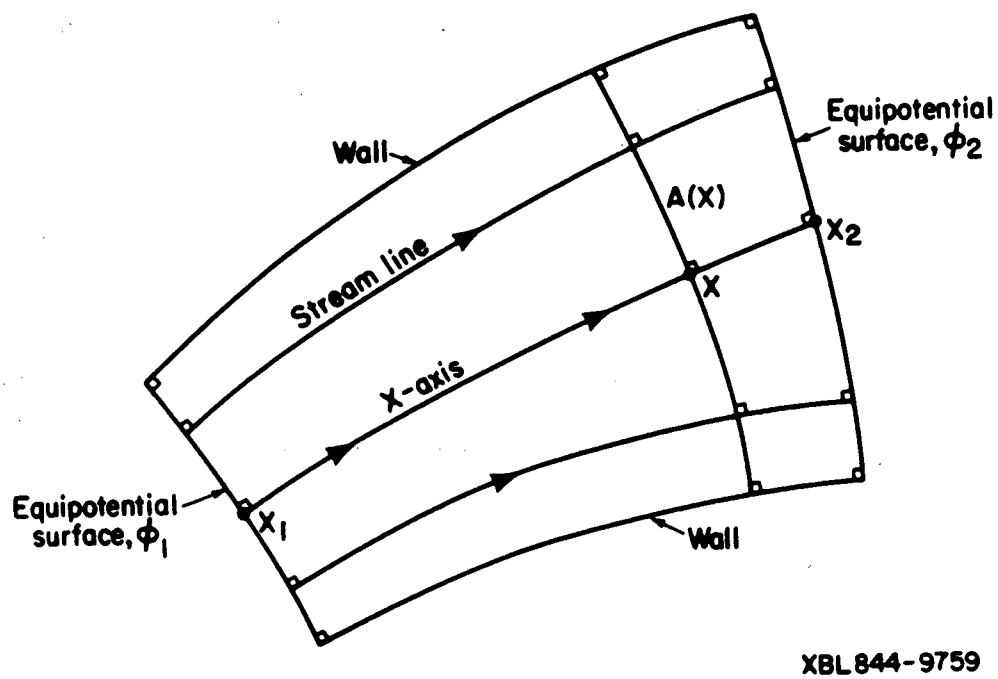

Figure 1. Sketch of a flow tube of non-uniform cross sectional area filled with a homogeneous porous material.

heads at x_1 and x_2; and A is the area of cross section (Fig. 1). Equation 1 is a valid generalization of Darcy's Law. It simply states that the flow rate is a function of the potential drop over the tube, the geometric properties of the porous material and the properties of the Newtonian fluid (both of which are included in K) and the geometry of the macroscopic flow channel. For a tube that is filled with a non homogeneous material such that K is a function of x, one may generalize (1) as follows:

$$Q = \frac{-(\phi_2 - \phi_1)}{\int_{x_1}^{x_2} \frac{dx}{K(x)A(x)}} \tag{2}$$

As shown in the appendix, one could neglect body forces and extend the derivation to the flow of a non-ideal gas with the expression,

$$Q_m = -\frac{k}{\mu}\frac{M}{RT}\frac{(p_2 - p_1)}{\int_{x_1}^{x_2} \frac{Z(x)dx}{p(x)A(x)}} \tag{3}$$

where Q_m is rate of mass flow, k is absolute permeability, μ is gas viscosity, M is molecular weight of gas, R is gas constant, T is temperature and Z is a factor for non-ideal gas behavior.

TRANSIENT SUBSURFACE FLOW

We now wish to use (1) or (2) to formulate the equation for transient subsurface flow. Obviously, neither (1) nor (2) is in a form compatible with the format of the differential equation. Therefore, we shall attempt to formulate the transient equation in a spatially integrated form.

In Figure 2, ℓ is a segment of the stream tube bounded by two surfaces L and R that are perpendicular to the stream lines. If we treat ℓ as a discrete elemental volume, then we may write the equation of mass conservation for this element as follows:

$$\rho \Delta t \ (Q_L - Q_R) = \Delta M_{w,\ell} \tag{4}$$

where ρ is the density of water; Δt is a discrete interval of time; Q_L and Q_R are flow rates across L and R; and $\Delta M_{w,\ell}$ is the change in mass of water over element ℓ during Δt. We now wish to express the right hand side of (4) in terms of the average hydraulic head over ℓ. To this end we introduce the capacity term through the relation,

$$M_{c,\ell} = \frac{\Delta M_{w,\ell}}{\Delta \phi_\ell} \tag{5}$$

where $M_{c,\ell}$ is the fluid mass capacity of element ℓ (Narasimhan and Witherspoon, 1977). Fluid mass capacity is a generalized storage coefficient for an arbitrary volume element. Also, $\Delta \phi_\ell$ in (5) is the average change in hydraulic head over ℓ during the time interval of interest. In view of (5), we may rewrite (4) as,

$$\rho \ (Q_L - Q_R) \ \Delta t = M_{c,\ell} \Delta \phi_\ell . \tag{6}$$

Under general transient conditions, the hydraulic heads at L and R and at any location in between will be changing at different time rates, with the result that $\Delta \phi$ will vary along x. If so, at what location will the $\Delta \phi_\ell$ given in (6) will occur? To answer this, we introduce the postulate described below.

Assume that element ℓ is consists of a material with a spatially constant specific fluid mass capacity, $m_{c,\ell}$, such that,

$$M_{c,\ell} = V_\ell \ m_{c,\ell} \tag{7}$$

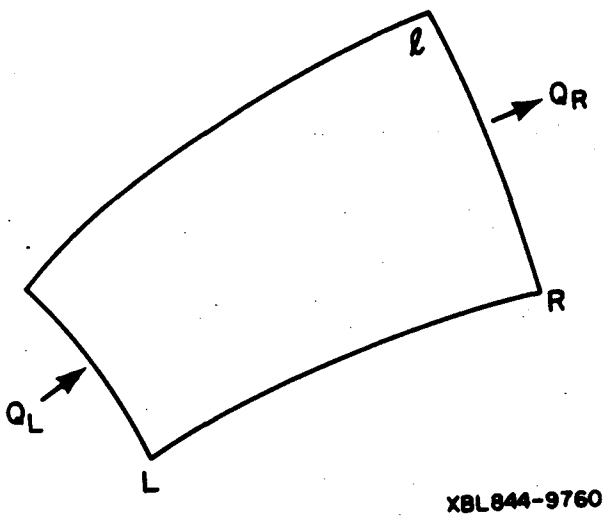

Figure 2. A section of a flow tube treated as an elemental volume ℓ.

where V_ℓ is the volume of ℓ and $m_{c,\ell}$ is the specific fluid mass capacity. Then, at any given instant the average hydraulic head ϕ_ℓ over ℓ is defined by

$$\phi_\ell = \frac{M_{w,\ell}}{M_{c,\ell}} = \frac{1}{M_{c,\ell}} \int_{x_L}^{x_R} m_{c,\ell}\phi(x)\ A(x)\ dx = \frac{1}{V_\ell} \int_{x_L}^{x_R} \phi(x)\ A(x)\ dx \qquad (8)$$

Now, let ϕ_L be the hydraulic head at L and ϕ_R the hydraulic head at R. We may now apply (1) to the element and write,

$$Q = \frac{-K(\phi_R - \phi_L)}{\int_{x_L}^{x_R} \frac{dx}{A(x)}} = \frac{-K(\phi(x) - \phi_L)}{\int_{x_L}^{x} \frac{dx}{A(x)}} . \qquad (9)$$

In view of (9) we get the expression for hydraulic head at any location on the x axis:

$$\phi(x) = \phi_L + \frac{(\phi_R - \phi_L) \int_{x_L}^{x} \frac{dx}{A(x)}}{\int_{x_L}^{x_R} \frac{dx}{A(x)}} . \qquad (10)$$

Let x_ℓ be the location between x_L and x_R at which the average hydraulic head of the element is realized. Then, from (10),

$$\phi_\ell = \phi(x_\ell) = \phi_L + \frac{(\phi_R - \phi_L) \int_{x_L}^{x_\ell} \frac{dx}{A(x)}}{\int_{x_L}^{x_R} \frac{dx}{A(x)}} \qquad (11)$$

Also, from (8).

$$\phi_\ell = \frac{1}{\int_{x_L}^{x_R} A(x)\,dx} \int_{x_L}^{x_R} \left[\phi_L + \frac{(\phi_R - \phi_L)\int_{x_L}^{x} \frac{dx}{A(x)}}{\int_{x_L}^{x_R} \frac{dx}{A(x)}}\right] A(x)\,dx. \quad (12)$$

Equating (11) and (12) and rearranging terms we get,

$$\int_{x_L}^{x_\ell} \frac{dx}{A(x)} = \frac{\int_{x_L}^{x_R} \frac{dx}{A(x)}}{(\phi_R-\phi_L)} \left\{ -\phi_L + \frac{1}{\int_{x_L}^{x_R} A(x)dx} \int_{x_L}^{x_R} \left[\phi_L + \frac{(\phi_R-\phi_L)\int_{x_L}^{x} \frac{dx}{A(x)}}{\int_{x_L}^{x_R} \frac{dx}{A(x)}}\right] A(x)dx \right\}. \quad (13)$$

This equation can be simplified by algebraic manipulation to

$$\int_{x_L}^{x_\ell} \frac{dx}{A(x)} = \frac{1}{\int_{x_L}^{x_R} A(x)\,dx} \int_{x_L}^{x_R} A(x) \left[\int_{x_L}^{x} \frac{dx}{A(x)}\right] dx\,. \quad (14)$$

One could explicitly solve (14) for x_ℓ, the location at which the average hydraulic head ϕ_ℓ occurs within the element ℓ. We postulate that x_ℓ is the "<u>location of average</u>" for element ℓ. Note that for the situation in which K and $m_{c,\ell}$ do not vary with time or with hydraulic head, the only unknown in (14) is x_ℓ, and it is purely a function of the geometry of the element.

One can easily verify, for example, that for a cylindrical shell bounded by an inner radius x_L and an outer radius x_R (14) leads to,

$$x_\ell = \exp\left[\frac{x_R^2 \ln x_R - x_L^2 \ln x_L}{\left(x_R^2 - x_L^2\right)} - \frac{1}{2}\right] \tag{15}$$

and, for a spherical shell,

$$x_\ell = \frac{2}{3}\,\frac{(x_R^3 - x_L^3)}{(x_R^2 - x_L^2)}\,. \tag{16}$$

In view of (1) and (14), we can now write the governing equation for the transient behavior of element ℓ. Consider, as shown in Fig. 3, the element ℓ and its neighbors 1 and 2. The equation of mass conservation for ℓ is now given by,

$$K\rho\Delta t\left\{\frac{\phi_1 - \phi_\ell}{\displaystyle\int_{x_1}^{x_\ell}\frac{dx}{A(x)}} + \frac{\phi_2 - \phi_\ell}{\displaystyle\int_{x_\ell}^{x_2}\frac{dx}{A(x)}}\right\} = m_{c,\ell}\left[\int_{x_L}^{x_R} A(x)\,dx\right]\Delta\phi\,(x_\ell) \tag{17}$$

where $\Delta\phi\,(x_\ell) = \Delta\phi_\ell$ is the change in hydraulic head at x_ℓ and is given by,

$$\Delta\phi\,(x_\ell) = \Delta\phi_\ell = \phi\,(t_o + \Delta t) - \phi\,(t_o). \tag{18}$$

Equation (17) is an exact statement of the transient problem for a discrete elemental volume and can be solved for $\Delta\phi_\ell$ as accurately as one may desire.

THE HETEROGENEOUS CASE

We now consider cases in which hydraulic conductivity and specific fluid mass capacity are functions of position. The spatial dependence of these properties may arise either of two ways. In the simpler case of heterogeneity, the properties are known a priori as functions of location and they remain independent of time. In this case one can

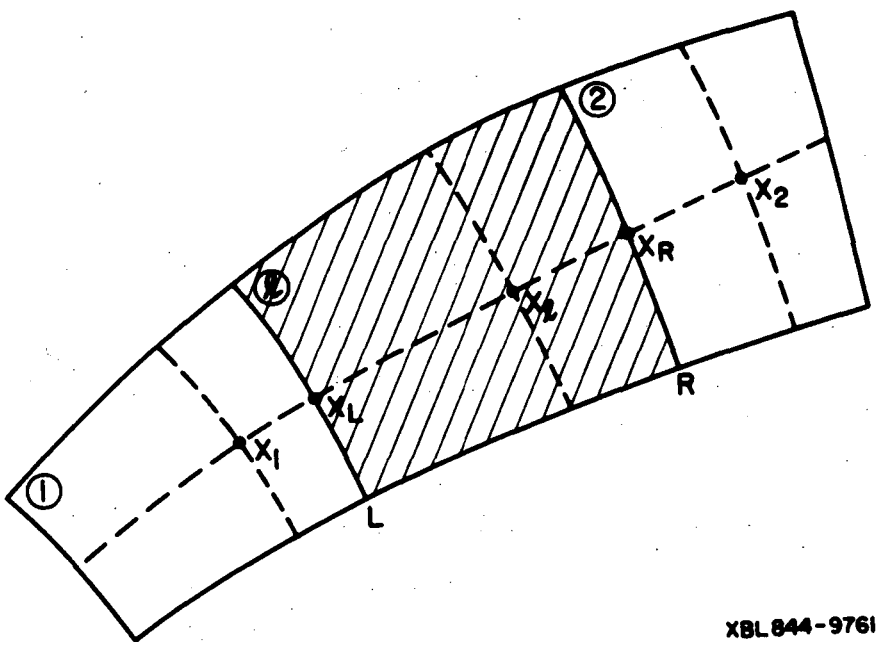

Figure 3. Volume element ℓ and its neighbors, volume elements 1 and 2, showing locations of average x_1, x_ℓ and x_2

evaluate flow rate using (2) in which the hydraulic conductivity is incorporated into the integrand in the denominator. So also one could evaluate x_ℓ, the location of the average hydraulic head over ℓ by extending (14) to include K within the integrand and solving explicitly for x_ℓ.

Consider, for illustration, equation 2. Suppose the interval (x_1, x_ℓ) consists of four different materials with the material interfaces perpendicular to the stream lines as shown in Fig. 4. The flow rate within this tube can be expressed by,

$$Q = \frac{-(\phi_\ell - \phi_1)}{\frac{1}{K_i}\int_{x_1}^{x_i} \frac{dx}{A(x)} + \frac{1}{K_j}\int_{x_i}^{x_j} \frac{dx}{A(x)} + \frac{1}{K_k}\int_{x_j}^{x_k} \frac{dx}{A(x)} + \frac{1}{K_\ell}\int_{x_k}^{x_\ell} \frac{dx}{A(x)}} \tag{19}$$

If A is constant in (19), then one can easily derive the well-known expression for harmonic mean for hydraulic conductivity,

$$K_{mean} = \frac{x_\ell - x_1}{\frac{x_i - x_1}{K_i} + \frac{x_j - x_i}{K_j} + \frac{x_k - x_j}{K_k} + \frac{x_\ell - x_k}{K_\ell}} . \tag{20}$$

Or, if the tube is radially symmetric such that $A = 2\pi x$, then we obtain,

$$K_{mean} = \frac{\ln \frac{x_\ell}{x_1}}{\frac{\ln x_i/x_1}{K_i} + \frac{\ln x_j/x_i}{K_j} + \frac{\ln x_k/x_j}{K_k} + \frac{\ln x_\ell/x_k}{K_\ell}} . \tag{21}$$

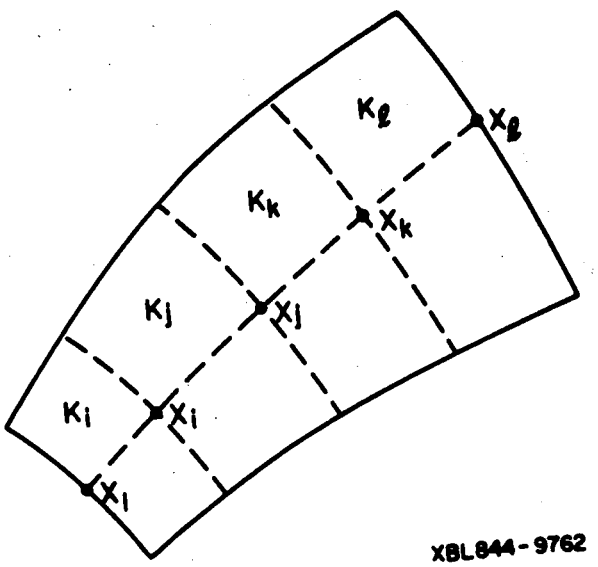

Figure 4. Volume element ℓ with 4 different materials with hydraulic conductivities K_i, K_j, K_k and K_ℓ.

THE NONLINEAR CASE

We now consider the case in which hydraulic conductivity is a function of hydraulic head. In unsaturated systems, hydraulic conductivity is a function of pressure head and hydraulic head is equal to pressure head plus a constant, the elevation head. If elevation is assumed to be constant, we may treat K as a function of hydraulic head in our discussions. In this case we may generalize (2) and obtain,

$$Q = \frac{-(\phi_2 - \phi_1)}{\int_{x_1}^{x_2} \frac{dx}{K[\phi(x)]A(x)}} \tag{22}$$

Equation 22 is an implicit equation because the function $\phi(x)$ within the integrand is unknown. We cannot, therefore, explicitly compute the flow rate. We may, however, use an appropriate recursive technique and simultaneously solve for Q as well as $\phi(x)$ within the interval (x_1, x_2).

For the non-linear case, the calculation of, x_ℓ, the location of the average potential within element ℓ leads to some difficulties. Following (8), one could express an average hydraulic head for the element by the relation,

$$\phi_\ell = \frac{1}{V\, m_{c,\ell}} \int_{x_L}^{x_R} m_c(\phi)\, \phi(x)\, dx \ . \tag{23}$$

In (23), $m_c(\phi)$ within the integrand denotes the material property which is a function of the hydraulic head within the element over which hydraulic head is varying. The $m_{c,\ell}$ in the denominator, however, represents the "average" specific fluid mass capacity for the entire

element. There is no sound logic available as to how one may define an average specific fluid mass capacity for an element over which the material property is a function of potential. As a result the average hydraulic head in (23) is also poorly defined. To avoid contending with this difficulty in formulating the transient equation, we dispense with the notion of specific fluid mass capacity and use a more primitive notion of fluid mass capacity.

Consider an interval of time Δt extending from t_o to t_1. Let θ be the volumeteric moisture content of the material of interest and let θ be a function of hydraulic head. That is, $\theta = \theta(\phi)$. Then, the change in the mass of water in the element over the time interval is given by,

$$\Delta M_{w,\ell}\ (\Delta t) = M_{w,\ell}\ (t_1) - M_{w,\ell}\ (t_o). \tag{24}$$

One could evaluate the mass of water contained the element at the two instants of time by the relations,

$$M_{w,\ell}\ (t_o) = \int_{x_L}^{x_R} \rho\,\theta(t_o)\ A(x)\ dx \tag{25}$$

$$M_{w,\ell}\ (t_1) = \int_{x_L}^{x_R} \rho\,\theta(t_1)\ A(x)\ dx\ . \tag{26}$$

In order to evaluate the integrals in (25) and (26) we need the distributions in hydraulic head over the element at the intants t_o and t_1. These distributions can in fact be obtained by implicitly solving (22) for flow rate as well as for the distribution of hydraulic head.

We can now define the fluid mass capacity of element ℓ by the relation,

$$M_{c,\ell} = \frac{\Delta M_{w,\ell}}{\Delta\phi_\ell} \tag{27}$$

where $\Delta\phi_\ell = \phi\ (t_1) - \phi\ (t_o)$.

However, since the change in potential over the time interval is a function of position within the volume element, the question arises as to the location at which $\Delta\phi_\ell$ should be measured. The answer is surprisingly simple; one can choose $\Delta\phi_\ell$ to be measured at any desired location within the element as long as one recognizes that the value $M_{c,\ell}$ computed is associated with that chosen location. In other words,

$$M_{c,\ell}\ (x_\ell) = \frac{\Delta M_{w,\ell}}{\Delta\phi(x_\ell)} \tag{28}$$

where x_ℓ is a conveniently chosen location anywhere within ℓ. It is clear from (28) as to why the fluid mass capacity so defined is primitive in nature. It is customary to define fluid mass capacity or specific fluid mass capacity for the limiting case in which $\Delta\phi_\ell$ tends to zero. Thus, for example, one usually defines,

$$m_{c,\ell} = \lim_{\Delta\phi_\ell \to o} \frac{1}{V_\ell} \frac{\Delta M_{w,\ell}}{\Delta\phi_\ell} . \tag{29}$$

However, in (28) we have let $\Delta\phi_\ell$ be a finite quantity. Secondly, fluid mass capacity and the analogous notion of heat capacity are customarily treated as material properties without any dependence on a spatial location. Such a consideration is valid if the elemental volume changes from one hydrostatic state to another hydrostatic state. In this case ϕ is constant everywhere within the element at any instant and fluid

mass capacity is uniquely defined in (27). However, if one is concerned with a discrete volume element that is changing from one transient state to another, the denominator in (27) is a function of position and one has to relate the definition of fluid mass capacity to a spatial location.

There is a special case that merits attention. If the volume element is made to be infinitely small, that is, one lets V_ℓ tend in the limit to zero, then the elemental volume contains only one point and the fluid mass capacity could conceivably defined uniquely at that point.

In view of the foregoing, we may now write the governing equation for a volume element under transient conditions,

$$\rho\Delta t \left\{ \frac{\phi_1 - \phi_\ell}{\displaystyle\int_{x_1}^{x_\ell} \frac{dx}{K(\phi(x))A(x)}} + \frac{\phi_2 - \phi_\ell}{\displaystyle\int_{x_\ell}^{x_2} \frac{dx}{K(\phi(x))A(x)}} \right\} = M_{c,\ell}(x_\ell)\Delta\phi(x_\ell) \ . \qquad (30)$$

One could solve (30) over arbitrarily discrete spatial and temporal domains using appropriate numerical methods involving iterative, recursive or other techniques.

DISCUSSION

For the special case of a volume element which is a segment of a stream tube we have developed a governing equation for transient subsurface flow. This equation is neither a differential equation nor a integro-differential equation usually obtained by integrating the differential equation. It does not involve any spatial derivatives. Nor

does it involve the notion of a point. Logically, the equation is consistent in itself and is founded on its own postulates. Numerical solutions of the equation can be validated in terms of the accuracy with which the integrals are evaluated and the time-dependent parameters are estimated. In other words, this development is completely independent of a differential equation, although one could relate this development with the appropriate differential equation for purposes of qualitative or quantitative comparison.

As pointed out in the introduction, the purpose of this preliminary report is to present a new perspective that may provide fresh insights into the formulation of transient subsurface flow equations. For example, if the complete independence of the formulation from the differential equation can be asserted, the question of validating numerical models can take on an entirely new significance. The current mathematical approach to validating numerical models consists in comparing discretized numerical solutions to known analytic solutions. A credible validation is indeed assumed impossible without the availability of an appropriate analytic solution. Secondly, when one uses the classical integrodifferential equation as the basis of numerical solutions, one is constrained to evaluate the spatial gradients of hydraulic head by discrete methods such as the finite differences or the finite elements. Unfortunately, since gradient, by definition, is a limit concept, the only real way of minimizing errors in the evaluation of gradients is to use arbitrarily fine discretization. Because of this, improved accuracy in the traditional approach implies finer discretization and larger computer storage. In an equation such as

(30) in which a true gradient does not occur, the solution process is not strongly dependent on discretization. Accuracy does not necessarily imply finer discretization, a factor of much practical significance in numerical modeling.

A key issue that will be raised in regard to (30) is that it is specific to a stream tube. In many problems of interest we do not know the location of the stream tube. Therefore, one could argue that the discussions presented here, although of interest, are of limited practical value. Two points are worth noting in this regard. First, in its essentials Darcy's Law, which provides a fundamental postulate for our theoretical development, is well defined only for a stream tube bounded by surfaces of equal potential. If we desire to validate our models against the postulate of Darcy's Law, it is very difficult for us to do so unless we deal with geometries closely related to the basic features of Darcy's Law. For more complex conditions, additional postulates, extending beyond Darcy's Law will be needed if more general validations are desired.

Second, even a stream tube formulation may not be very limiting. We may classify the problems of interest in subsurface fluid flow into three categories:

1. Those in which the flow geometry is prescribed in detail. This would include axi-symmetric or spherically symmetric problems as well as many other problems with mixed symmetry.
2. Those in which the stream tubes do not change with time but whose exact locations are a priori unknown.

3. Those in which the stream tubes vary with time. Problems in category 1 can be addressed directly using the ideas presented here. The number of problems of interest here are not trivial, if we recognize that when we deal with non-linear systems, we still attempt to consider only the simplest geometries.

One could take on problems under category 2 using the ideas presented if one uses the qualitative understanding of the problem on hand to set up the flow region discretization. Extension of the method to handle problems in category 3 should surely await further development of postulates in regard to flow tubes that change geometry with time.

RELATION TO DIFFERENTIAL EQUATION

We can combine (17) which expresses the linear problem and (30) which expresses the non-linear problem to write a general expression, (Fig. 3),

$$\rho \left\{ \frac{\phi_1-\phi_\ell}{\int_{x_1}^{x_\ell} \frac{dx}{K(.)A(x)}} + \frac{\phi_2-\phi_\ell}{\int_{x_\ell}^{x_2} \frac{dx}{K(.)A(x)}} \right\} = M_{c,\ell} \frac{\Delta\phi(x_\ell)}{\Delta t} \qquad (31)$$

In the case of the linear problem K(.) is an a priori known spatial function, while in the case of the non-linear problem K(.) is a function of ϕ, which in turn is a function of x. Considering the right-hand side of (31) $M_{c,\ell} = V\, m_{c,\ell}$ in the case of the linear problem where $m_{c,\ell}$ is an a priori known function of space and x_ℓ is the "location of average". For the non-linear problem, $M_{c,\ell}$ is a function of the arbitrarily chosen location x_ℓ and, is as defined in (28), applies to the arbitrarily chosen time interval Δt.

In order to derive the partial differential equation from (31), we may express the right-hand side of (31) by the equivalent expression,

$$M_{c,\ell} = V_\ell \, m_{c,\ell}. \tag{32}$$

For the linear problem $m_{c,\ell}$ is a known average value that is independent of time. For the non-linear problem, $m_{c,\ell}$ in (32) satisfies the relation according to (28),

$$m_{c,\ell}\,(x_\ell) = \frac{1}{V_\ell}\,\frac{\Delta M_{w,\ell}}{\Delta\phi(x_\ell)} \tag{33}$$

where $\Delta\phi(x_\ell)$ is the average change in potential at x_ℓ over an arbitrarily chosen time interval Δt.

We may introduce a set of assumptions now to derive the parabolic partial differential equation. First we assume that $A(x)$ has a simple functional form such as $A(x) = A_o + m_1 x$ or $A_o + m_1 x^2$ with the parameters A_o and m_1 remaining constant between x_1 and x_2 (Fig. 3). We may then divide both sides of (31) by V_ℓ and state the conservation of mass per unit volume of element ℓ,

$$\frac{\rho}{V_\ell}\left\{\frac{\phi_1-\phi_\ell}{\displaystyle\int_{x_1}^{x_\ell}\frac{dz}{K(.)A(x)}} + \frac{\phi_2-\phi_\ell}{\displaystyle\int_{x_\ell}^{x_2}\frac{dx}{K(.)A(x)}}\right\} = m_{c,\ell}\,\frac{\Delta\phi(x_\ell)}{\Delta t}\ . \tag{34}$$

We may now let $V_\ell \to 0$ so that the left-hand side of (34) leads to the div of $\rho K(.)\partial\phi/\partial x$. By definition (Sokolnikoff and Redheffer, p. 394) divergence is merely the rate of accumulation per unit volume in a vanishingly small elemental volume. The condition $V_\ell \to 0$, requires that (Fig. 3), $x_L \to x_\ell$ and $x_R \to x_\ell$ so that X_L, x_ℓ and x_R coalesce. And, if we let $\Delta t \to 0$, (34) collapses to a point-equation,

$$-\text{div.}\ \rho K(.)\ \frac{\partial\phi}{\partial x} = m_c\ \frac{\partial\phi}{\partial t}\ . \tag{35}$$

For the linear problem $K(.)$ and m_c are constant. For the non-linear problem $K(.) = K(\phi)$ and $m_c = m_c(\phi)$ which is defined by

$$m_c = \lim_{\substack{V_\ell \to 0 \\ \Delta\phi_\ell \to 0}} \frac{1}{V_\ell}\ \frac{\Delta M_{w,\ell}}{\Delta\phi_\ell}\Bigg|_{\phi}\ . \tag{36}$$

The PDE in (35) has been derived from (31) subject to the assumptions of a simple functional form for $A(x)$ with constant parameters A_o and m_1. If these parameters change along the flow tube, then one has to set up a PDE for each segment over which A_o and m_1 are constant and couple adjoining segments by continuity criteria. Moreover the PDE is also subject to the assumption of a vanishingly small element, a vanishingly small Δt and a vanishingly small $\Delta\phi_\ell$ is defining m_c as in (36). The primitive equation (31), on the contrary, is not limited by any of these assumptions.

It is very important to point out here that the location of average x_ℓ and its role in influencing $m_{c,\ell}(x_\ell)$ are not explicitly manifest in the PDE because the plurality of x_L, x_ℓ and x_R is lost in the point-wise PDE. If one wishes to obtain (31) by integrating (35) in space and time, one has to carefully introduce the notion of location of average into the integration process. This step requires a knowledge of the manner in which (35) is derived from (31). However, of one simply starts with (35) as a mathematical statement and carries out the spatial and temporal integrations, one could end up with an expression that is indeed different from (31) and hence not exactly representative of the non-linear physical problem of interest.

AN ILLUSTRATION

We will just consider one example to illustrate that the logic developed in so far does indeed have practical merit. We consider the radial flow of water to a well of finite radius, 0.1 m, producing at a constant rate Q. The well fully penetrates an aquifer of constant thickness H, consisting of a homogeneous material with constant hydraulic conductivity and specific fluid mass capacity. For this system, the analytical solution is given by,

$$\phi(t) - \phi_o = \frac{Q}{4\pi KH} W(u) \tag{37}$$

$$W(u) = \int_u^\infty \frac{e^{-u}}{u} du \tag{38}$$

in which

$$u = \frac{r^2 m_c}{4\rho Kt} . \tag{39}$$

In the above, r is the distance to the point of observation and ϕ_o is the initial potential, assumed constant throughout the aquifer.

To solve this problem numerically using (17), the aquifer was divided into 4 cylindrical shells, each representing a volume element as shown in Fig. 5. As can be seen, the discretization is very coarse, with the volume of a given element being 2,500 times larger than the next smaller one. Also, the well itself is treated as a volume element to realistically simulate effects of well-bore storage.

The results of the simulation are given in Fig. 6 and Fig. 7 which are plots of the dimensionless variables appropriate to the problem. The solid line in the figure is the analytic solution and the solid

dots denote the results obtained by solving (17). The open dots denote solution obtained using the conventional Integrated Finite Difference Scheme (Narasimhan and Witherspoon, 1976). It is clear that despite the extremely coarse discretization used, equation (17) has led to a solution that is reasonably close to the analytic solution.

The wave-like departures of the numerical solution from the analytic solution merit attention. Note that as the discharge is commenced as a step function at $t = 0$, a perturbation front migrates radially from the well-bore at a finite velocity. A finite time interval is needed for this front to successively cross the outer surface of each volume element in Fig. 5. Until the perturbation front has crossed the outer surface of a given element, only that part of the element from the inner surface to the location of the front really experiences the transient flow. The rest of that of element beyond the location of the perturbation front does not participate in the transient process. Therefore, the bulk volume of the element is a function of time until the perturbation front passes its outer surface. During this period of time-dependent geometry, the location of the average hydraulic head within the element, x_ℓ, is a function of time. It appears that the wave-like departures in Fig. 6 and Fig. 7 arise from not accounting for the time-dependent geometry of each of the elements during the appropriate early times. This reasoning is supported by the fact that the numerical solution exactly matches the analytical solution for very large times (t_D greater than 10^9) after the perturbation has crossed the outer impermeable boundary of the system. Indeed, this reasoning suggests that if a proper logic

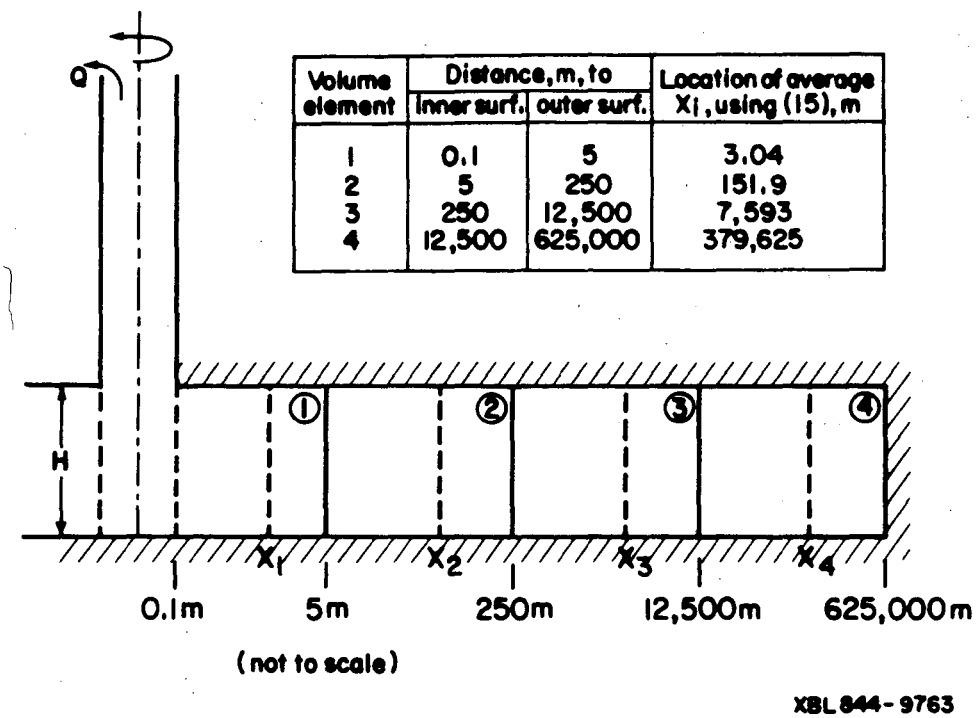

Volume element	Distance, m, to inner surf.	Distance, m, to outer surf.	Location of average x_i, using (15), m
1	0.1	5	3.04
2	5	250	151.9
3	250	12,500	7,593
4	12,500	625,000	379,625

Figure 5. Space discretization for example problem. x_1, x_2, x_3, x_4 represent locations of average.

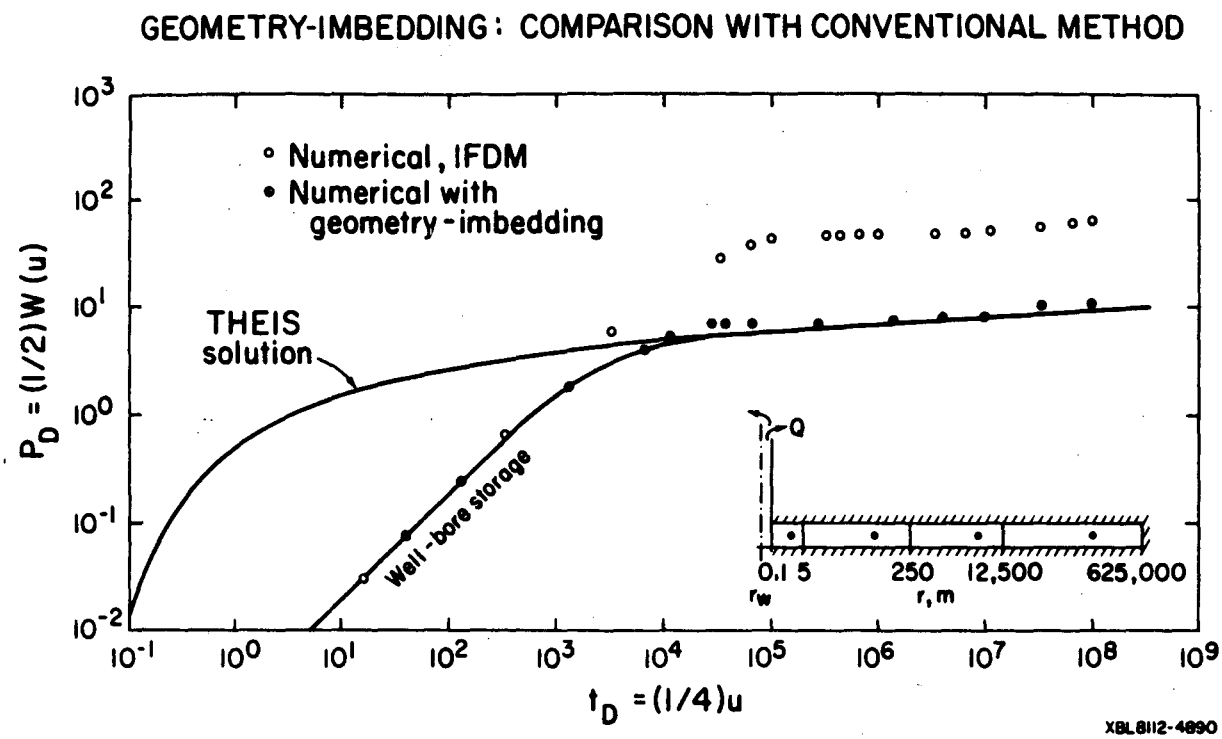

Figure 6. Example problem: Comparison of geometry-imbedded solution with analysis solution and a conventional numerical solution. Radially infinite case.

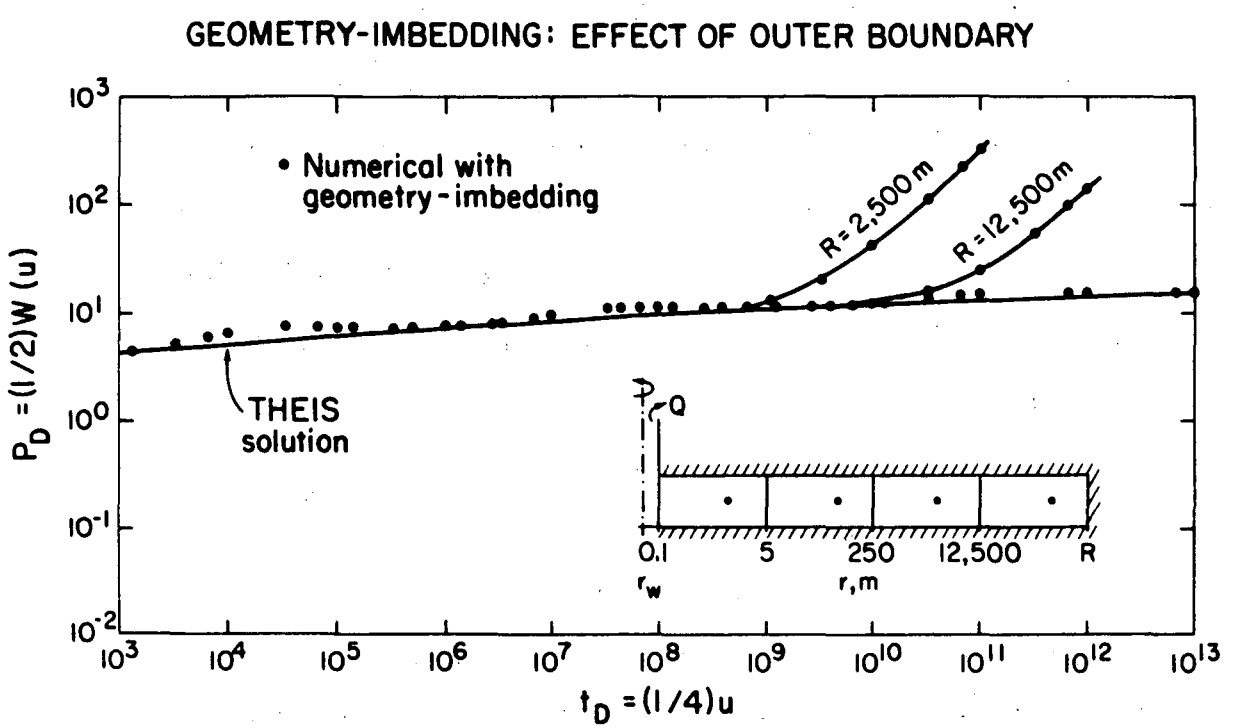

Figure 7. Example problem. Comparison of geometry-imbedded solution with analysis solution. Radially bounded case.

can be developed to handle the rate of propagation of the front in time, then one may be able to solve the entire problem with but a single volume element that spans the region from the well to the front. The geometry of this element will of course be a function of time. The novel possibility then arises that the solution of the transient problem should in fact seek to predict the position of the propagating front as a function of time. If its position is known at any instant, one may use (10) to compute $\phi(x)$ at any location within the element. This perception of solving the transient subsurface problem is quite different in character from that of the traditional approach of computing solutions at discrete points in a spatial domain which is fixed in time.

ACKNOWLEDGMENTS

I would like to thank Shimon Coen, Karsten Pruess and Yvonne Tsang for constructive criticisms of the manuscript. This work was supported by the Director, Office of Energy Research, Office of Basic Energy Sciences, Division of Engineering, Mathematics and Geosciences of the U. S. Department of Energy under Contract No. DE-AC03-76SF00098.

REFERENCES

Collins, R.E., Flow of Fluid Through Porous Materials, Reinhold Co., 1961

Narasimhan, T.N. and K.P. Goyal, A Second look at Darcy's Law through geometry imbedding, EOS, Trans. Am. Geophys. Union, Abstract, 62(45), 871, 1981

Narasimhan, T.N. and P.A. Witherspoon, An integrated finite difference method for analyzing fluid flow through porous media, Water Resources Res., 12(1), 57-64, 1976

Narasimhan, T.N. and P.A. Witherspoon, Numerical model for saturated-unsaturated flow in deformable porous media, 1. Theory, Water Resources Res., 12(3), 657-64, 1977

Sokolnikoff, I. S. and R. M. Redheffer, Mathematics of Physics and Modern Engineering, McGraw Hill, New York, 1966, 752 pp.

APPENDIX 1

Derivation of Geometry-imbedded Darcy's Law

Consider a tube of non-uniform cross sectional area inclined at an angle β from the horizontal and filled with a homogeneous porous material (Fig. A.1). Let water flow from left to right as shown. F_p is the force that impels the water to flow in the direction of movement. This force is opposed by the body force F_B and the frictional force, F_μ. Assuming equilibrium of forces, we may write,

$$F_p = F_\mu + F_B. \tag{A.1}$$

We postulate the following expression for F_p,

$$F_p = n(p_1 - p_2)\ A \tag{A.2}$$

where, A is the mean cross sectional area, given by,

$$A = \frac{1}{x_2 - x_1} \int_{x_1}^{x_2} A(x)\ dx \tag{A.3}$$

and n is porosity. The body force, F_B is given by,

$$F_B = Vn\rho_w g \sin\beta = Vn\rho_w g \frac{z_2 - z_1}{x_2 - x_1} \tag{A.4}$$

where V is the volume of the tube, ρ_w is density of water, and g is acceleration due to gravity.

For a Newtonian fluid, F_μ is the frictional exerted by the moving fluid on the solid grains. That is,

$$F_\mu = \mu \left\langle\left\langle \frac{dv}{dy} \right\rangle\right\rangle A_s \tag{A.5}$$

where μ is the coefficient of viscosity, v is fluid velocity which is

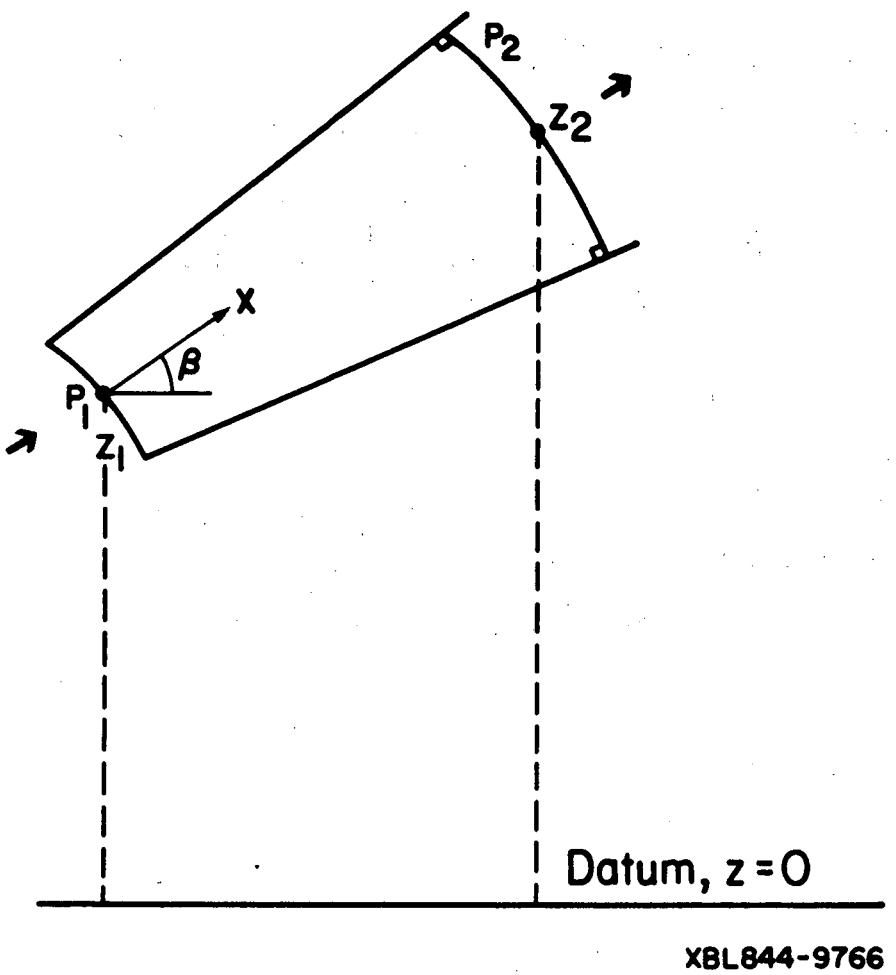

Fig. A.1. Schematic representation of an inclined flow tube filled with a homogeneous porous material.

zero at the solid surface under conditions of non-slip, A_s is the total surface area of the solid grains and they y axis is oriented perpendicular to the solid surface. We now develop an expression for F_μ in a manner suggested by Collins (1961).

As shown in Fig. A.2, consider a small segment of the flow tube with thickness dx. Let the average velocity gradient within the pores contained in this segment be $\langle\frac{dv}{dy}\rangle$. We postulate that this average is proportional to the average macroscopic velocity across the flow tube at x. Thus,

$$\langle\frac{dv}{dy}\rangle = B\,\frac{Q}{A(x)} \tag{A.6}$$

where B is a constant of proportionality, which depends on pore diameter, tortuosity and specific surface of the porous medium. We now wish to average <dv/dy> over the entire tube. We postulate,

$$\begin{aligned}\langle\langle\frac{dv}{dy}\rangle\rangle &= \frac{1}{x_2-x_2}\int_{x_1}^{x_2}\langle\frac{dv}{dy}\rangle\,dx \\ &= \frac{BQ}{x_2-x_1}\int_{x_1}^{x_2}\frac{dx}{A(x)}\end{aligned} \tag{A.7}$$

In view of (A.7) we may write,

$$F_\mu = \mu\,\frac{BQV\sigma}{x_2-x_1}\int_{x_1}^{x_2}\frac{dx}{A(x)} \tag{A.8}$$

(A.8) where σ is the specific surface of the porous medium. In view of (A.2), (A.4) and (A.8), the equilibrium equation (1) becomes,

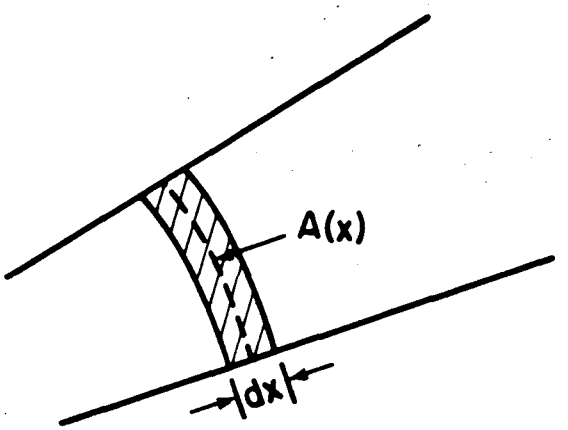

XBL844-9767

Fig. A.2. A small segment of the flow tube with width dx and area A(x).

$$n(p_1-p_2)\,\frac{V}{x_2-x_1} = \mu\,\frac{BQV\sigma}{x_2-x_1}\int_{x_1}^{x_2}\frac{dx}{A(x)} + Vn\rho_w g\,\frac{z_2-z_1}{x_2-x_1}\,. \tag{A.9}$$

Or, rearranging and simplifying,

$$Q = \frac{-n}{B\sigma}\;\frac{1}{\mu}\,\frac{[p_2-p_1] + \rho_w g\,(z_2-z_1)}{\displaystyle\int_{x_1}^{x_2}\frac{dx}{A(x)}}\,. \tag{A.10}$$

Noting that $p = \rho_w g$, we may rewrite (A.10) as

$$Q = \frac{-n\rho_w g}{B\sigma}\;\frac{1}{\mu}\,\frac{[\Psi_2-\Psi_1] + \rho_w g\,(z_2-z_1)}{\displaystyle\int_{x_1}^{x_2}\frac{dx}{A(x)}} \tag{A.11}$$

where Ψ is pressure head.

Or,

$$Q = \frac{-K[(\phi_2-\phi_1]}{\displaystyle\int_{x_1}^{x_2}\frac{dx}{A(x)}} \tag{A.12}$$

where

$$K = \frac{\rho_w g n}{B\sigma\mu} \quad \text{and } \phi = z + \Psi.$$

Extension to Flow of a Gas

It is of interest to extend the above derivation to the flow of a non-ideal gas under isothermal conditions. For a non-ideal gas,

$$\rho = \frac{Mp}{ZRT} \tag{A.13}$$

where M is the molecular weight of the gas, Z(p) is the Z factor to account for deviations from the law for ideal gases, R is the gas constsnt and t is temperature.

In dealing with the steady flow of a compressible fluid through a porous medium we need to recognize that it is the mass flux of the gas that is constant across any cross section of the flow tube and not the volumetric gas flux. Secondly, we may neglect for convenience the gravitational potential in considering the flow of gases.

Accordingly, rewrite (A.6) for a gas using the mass flux of the gas, Q_m:

$$\langle\frac{dv}{dy}\rangle = B\,\frac{Q_m}{\rho(x)A(x)}\,. \tag{A.14}$$

In view of (A.13), we may rewrite (A.14) as

$$\langle\frac{dv}{dy}\rangle = \frac{BQ_mRT}{M}\;\frac{Z(p(x)}{p(x)A(x)}\,. \tag{A.15}$$

Consequently,

$$F_\mu = \mu\,\frac{BQ_mRTV\sigma}{M(x_2-x_1}\int_{x_2}^{x_1}\frac{Z(x)dx}{p(x)A(x)}\,. \tag{A.16}$$

Equating (A.16) with F_p, rearranging and simplifying, we get,

$$Q_m = -\frac{k}{\mu}\,\frac{M}{RT}\,\frac{(p_2-p_1)}{\displaystyle\int_{x_1}^{x_2}\frac{Z(x)dx}{p(x)A(x)}} \tag{A.17}$$

This report was done with support from the Department of Energy. Any conclusions or opinions expressed in this report represent solely those of the author(s) and not necessarily those of The Regents of the University of California, the Lawrence Berkeley Laboratory or the Department of Energy.

Reference to a company or product name does not imply approval or recommendation of the product by the University of California or the U.S. Department of Energy to the exclusion of others that may be suitable.

TECHNICAL INFORMATION DEPARTMENT
LAWRENCE BERKELEY LABORATORY
UNIVERSITY OF CALIFORNIA
BERKELEY, CALIFORNIA 94720