Submitted to
Journal of Chemical Physics

LBL-1841
Preprint c.1

MÖSSBAUER STUDY OF QUINQUEVALENT GOLD COMPOUNDS

G. Kaindl and K. Leary and Neil Bartlett

July 1973

Prepared for the U. S. Atomic Energy Commission
under Contract W-7405-ENG-48

For Reference

Not to be taken from this room

LAWRENCE BERKELEY LABORATORY • UNIVERSITY OF CALIFORNIA • BERKELEY

LBL-1841
c.1

DISCLAIMER

This document was prepared as an account of work sponsored by the United States Government. While this document is believed to contain correct information, neither the United States Government nor any agency thereof, nor the Regents of the University of California, nor any of their employees, makes any warranty, express or implied, or assumes any legal responsibility for the accuracy, completeness, or usefulness of any information, apparatus, product, or process disclosed, or represents that its use would not infringe privately owned rights. Reference herein to any specific commercial product, process, or service by its trade name, trademark, manufacturer, or otherwise, does not necessarily constitute or imply its endorsement, recommendation, or favoring by the United States Government or any agency thereof, or the Regents of the University of California. The views and opinions of authors expressed herein do not necessarily state or reflect those of the United States Government or any agency thereof or the Regents of the University of California.

0 0 0 0 3 9 0 0 7 8 4

LBL-1841

MÖSSBAUER STUDY OF QUINQUEVALENT GOLD COMPOUNDS

G. Kaindl†

Nuclear Chemistry Division of The Lawrence Berkeley Laboratory, University of California, Berkeley, California 94720

and

K. Leary and Neil Bartlett

Inorganic Materials Research Division, Lawrence Berkeley Laboratory and Department of Chemistry; University of California, Berkeley, California 94720

Abstract

The recently synthesized Au(V) complex fluorides of the form $A^+AuF_6^-$ with $\underline{A}$ = $Xe_2F_{11}^+$, XeF_5^+, and Cs^+ have been studied by Mössbauer spectroscopy with the 77.3 keV gamma resonance of ^{197}Au. The values obtained for isomer shift and electric quadrupole interaction are in harmony with the assigned oxidation state, Au(V), as well as with the octahedral shape of the AuF_6^- anion.

I. INTRODUCTION

A novel oxidation state (+5) of gold, as represented in the AuF_6^- anion, has recently been established[1]. The complex fluorides $Xe_2F_{11}^+AuF_6^-$, $XeF_5^+AuF_6^-$, $O_2^+AuF_6^-$ and $Cs^+AuF_6^-$ have been synthesized. More recently the crystal structure of $Xe_2F_{11}^+AuF_6^-$ has been determined[2], revealing that the anion in that salt possesses essentially octahedral symmetry.

At the time of their discovery, Mössbauer spectroscopy offered an additional tool to both confirm the quinquevalent oxidation state of gold in these compounds and support the octahedral form predicted for the

AuF_6^- anion. The 77.3 keV $1/2^+ \rightarrow 3/2^+$ M1(12.4% E2) gamma transition of monoisotopic ^{197}Au[3] is well suited for chemical applications of Mössbauer spectroscopy, since the observed ranges of isomer shifts and electric quadrupole splittings amount to several experimental line-widths.

Consequently, Au(III) and Au(I) compounds have been the subject of extensive investigations by nuclear gamma resonance spectroscopy[4-6]. The results revealed a dependence of the isomer shift on the oxidation state similar to that found in compounds of the 3d, 4d, and 5d transition elements, e.g., ^{57}Fe, ^{99}Ru, ^{193}Ir, and ^{189}Os[7]. On the other hand, appreciable variation of the isomer shift within the same oxidation state was observed for Au(I) and Au(III) compounds, much as in the cases of Ru(II) and Ru(III)[8,9]; Ir(III)[10]; and Fe(II)[11] low-spin complexes, indicating a marked dependence of the isomer shift upon the nature of the ligands.

The Mössbauer data from the quinquevalent gold compounds reported in this paper provides a further basis for the identification of the factors which affect the isomer shift.

II. EXPERIMENTAL

A. Preparation of Gold(V) Compounds.

$Xe_2F_{11}^+AuF_6^-$ and $Cs^+AuF_6^-$ were prepared as previously described[1]. $XeF_5^+AuF_6^-$ was prepared from $Xe_2F_{11}^+AuF_6^-$ by heating the 2:1 compound to 110°C, with removal of the evolved XeF_6 under vacuum. The 1:1 complex was purified by sublimation at 110°C. AuF_3 was prepared using Sharpe's method[12], and the fluoride was subsequently fluorinated (70 psi fluorine gas at 320°) to remove any traces of BrF_3.

All compounds were characterized by their respective X-ray powder patterns and Raman spectra, and the xenon compounds were analyzed quantitatively for Xe using a Dumas nitrometer previously saturated with xenon. Since all of these compounds are extremely water sensitive, the utmost precautions were taken to exclude moisture from all apparatus and materials. Absorber capsules were loaded in a Vacuum Atmospheres Corp. Drilab (N_2 atm), and were checked after Mössbauer measurements to ensure the sustained quality of the samples.

B. Mössbauer Technique.

All samples were put into vacuum-tight, indium-metal-gasketed absorber capsules made of aluminum with inner containers made of Kel-F. The thickness of each absorber was adjusted to approximately 50 mg/cm^2 of ^{197}Au. The standard Mössbauer transmission experiments were performed with both source and absorber cooled to 4.2°K, using a sinusoidal velocity spectrometer[13] and a Ge(Li)-diode for recording the 77.3 keV gamma rays. In the employed data processing method, the channels corresponding to maximum velocity are obtained from symmetry arguments alone[13], thereby allowing high precision in the determination of isomer shifts.

Sources of ^{197}Pt, in platinum metal, were prepared by neutron irradiation of platinum metal foils (about 3 mg, enriched to 65% in ^{196}Pt) in an integrated thermal neutron flux of 3×10^{19} n/cm^2. These foils were used as received from the reactor, without further treatment. They were re-irradiated repeatedly.

III. RESULTS AND DISCUSSION.

Figure 1 shows, as an example, the Mössbauer spectrum of $Xe_2F_{11}^+$ AuF_6^-; a single unbroadened resonance line is observed. The solid line

is the result of a least-squares fit of a Lorentzian line to the data. Almost identical Mössbauer spectra were obtained for $XeF_5^+AuF_6^-$ and $Cs^+AuF_6^-$. Since the previously reported[4] shift for AuF_3 was very different from the AuF_4^- shifts, and was obtained from a reportedly[4] decomposing sample, the Mössbauer spectrum of AuF_3 was also measured. Our material was prepared in high purity as a starting material for the synthesis of the quinquevalent gold compounds. Due to electric quadrupole splitting of the $I^\pi = 3/2^+$ nuclear ground state of ^{197}Au, the resulting Mössbauer spectrum consists of two Lorentzian lines separated by $\Delta E_Q = 2.71 \pm 0.02$ mm/s.

The results of the present work are summarized in Table I. The observed experimental line-widths, when corrected for line-broadening caused by finite absorber thickness[14], compare quite well with twice the natural width of the Mössbauer gamma rays, $W_o = 2\hbar/\tau = 1.85 \pm 0.01$ mm/s[15]. This puts an upper limit of $\Delta E_Q < 0.05$ mm/s to the possible electric quadrupole interaction at the gold sites in these quinquevalent compounds, which is in agreement with the observed octahedral symmetry of the AuF_6^- anion in the crystal structure $Xe_2F_{11}^+AuF_6^-$[2].

Moreover, structural data also indicate an octahedral anion in both $Cs^+AuF_6^-$ and $XeF_5^+AuF_6^-$. $Cs^+AuF_6^-$ is isomorphous with $Cs^+OsF_6^-$, the structure of which[16] shows the anion to be octahedral. $XeF_5^+AuF_6^-$ is isostructural[17] with $XeF_5^+AsF_6^-$, the anion of which[18] is nearly octahedral.

The results for the isomer shift $\underline{\underline{S}}$ of the quinquevalent compounds, listed in column 4 of Table I, are almost identical with each other, supporting the existence of similar AuF_6^- anions in all of the studied

quinquevalent gold compounds. This has also been concluded from the close similarity of the Raman spectra obtained for these complexes[1,2]. The results for isomer shift and electric quadrupole splitting found for AuF_3 agree well with those given in reference 4.

A graphical representation of the present isomer shift results, together with those for Au(III) and Au(I) compounds with halogen ligands, taken from references 4-6, is presented in Figure 2. With the exception of AuF_3, the isomer shifts arrange themselves in three well separated groups corresponding to univalent, tervalent, and quinquevalent gold. As in the case of compounds of Fe, Ru, Ir, Pt and Os[7-11, 19, 20] the isomer shifts exhibit a monotonic dependence on the oxidation state.

Assuming constant electron density within the nucleus, one can write for the isomer shift $\underline{\underline{S}}$ in velocity units[21]

$$\underline{\underline{S}} = c/E_\gamma \cdot 2\pi/3 \cdot Z \cdot e^2 \cdot \Delta\langle r^2\rangle \cdot \Delta\rho(0)$$

where $\Delta\langle r^2\rangle = \langle r^2\rangle_e - \langle r^2\rangle_g$ is the change of the mean-squared nuclear charge radius between the excited state and the ground state of the nucleus, and $\Delta\rho(0)$ stands for the difference of the total electron density at the Mössbauer nucleus in the two chemical enviornments. E_γ is the energy of the Mössbauer gamma rays and c, e, and Z have their usual meanings.

The total electron density at the nucleus $\rho(0)$ depends on the nature of the chemical bonding. Positive contributions to $\rho(0)$ arise from the atomic 6s populations of the molecular orbitals on the gold ion, while a decrease in $\rho(0)$ is caused by the atomic 5d populations due to their shielding effects on s electrons. The relative magnitudes of the various

contributions are known from the results of relativistic free-ion self-consistent field calculations for gold[22] and for other d transition elements. The atomic 6p populations, on the other hand, yield only small contributions both by shielding of s electrons and by their relativistic density at the nucleus[22]. Hence $\rho(0)$ and consequently the isomer shift will mainly depend on the atomic 6s and 5d populations on the gold ion.

From the effects of quasi-hydrostatic pressure on the transition energy of the 77.3 keV gamma rays of ^{197}Au in metallic gold, a value of $\Delta\langle r^2\rangle \simeq +9 \times 10^{-3}$ fm^2 has been derived for the change of the mean-squared nuclear charge radius[23]. The positive sign of $\Delta\langle r^2\rangle$ implies an increase in $\rho(0)$ with increasing isomer shift. The isomer shift results of Figure 2 thus reveal an increase in $\rho(0)$ with increasing oxidation state of gold. This is what is expected on the basis of d electron shielding arguments, assuming a decrease in the atomic population of 5d orbitals on gold going from univalent to tervalent to quinquevalent gold compounds with halogen ligands. The isomer shifts obtained for the AuF_6^- complexes therefore strongly support the assigned quinquevalent oxidation state of gold.

A more quantitative discussion of the isomer shift results of Figure 2, especially their use for a derivation of an estimate for $\Delta\langle r^2\rangle$, is not straightforward since there are considerable variations in the Au atom coordination in these gold compounds. Au(I) compounds usually contain linear ligand-gold-ligand units in the first coordination sphere[24], while most of the Au(III) complexes have square-planar molecular symmetry[25]. The Au(V) complexes studied in the present work, on the other hand, have octahedral symmetry[2].

Bartlett has previously argued[26] for the F ligands in the transition metal hexafluorides being good π-electron donors. If this is the general situation for F attached to a transition metal atom, we can expect the electron population of d_π symmetry atomic orbitals on gold to increase with increasing coordination in F. This effect would offset to some extent d electron density decrease which is coupled with the oxidation state increase. Thus the isomer shift differences between the various Au oxidation states, involving the same ligand, are smaller than those expected from the s-electron density results of free-ion Dirac-Fock calculations (using the above value for $\Delta\langle r^2\rangle$[15]) for different d-configurations of gold[23].

It is probable that the greater isomer shift of AuX_4^- (X = Cl, Br, I) relative to AuF_4^- is due to the poor π donor ability of Cl, Br and I relative to F. Alternatively, the availability of d orbitals of the valence-shell quantum number in Cl, Br and I is often cited[27] in arguing for π acceptor properties for these atoms. F atoms, in contrast, do not have this facility.

As may be seen from Figure 2 the isomer shift for AuF_3 is anomalously low. The observation is firm, the results from our high quality sample being in good agreement with the previous findings[4]. We believe that the low isomer shift of AuF_3 is linked to its structure. The Au atom in AuF_3 is bonded to four F atoms in a planar, roughly square arrangement[28]. The arrangement has C_{2v} symmetry and each $[AuF_4]$ group has two sets of adjacent (cis) Au-F distances: one short at 1.91(4) Å and one long, at 2.04(3) Å. In addition, the gold atom is coordinated to two other F atoms at 2.69(4) Å on an axis roughly perpendicular to the plane defined by the

[AuF_4] group. Thus the coordination of the Au atom in AuF_3 may be described approximately as tetragonally-elongated octahedral. In no other Au(III) compound, shown in Figure 2, is this structure type observed. It is usual for the Au(III) compound to be square or nearly-square coordinated[29] but other ligands approaching the [AuL_4] group always do so well off the axis normal to this plane. The usual situation is illustrated by the crystal structure of $KAuF_4$[30].

The AuF_4^- ion in $KAuF_4$ is recognized as the square planar AuF_4 group characterized by an Au-F distance of 1.95(2) Å. (This Au-F distance is not significantly different from the mean of the Au-F distances of the AuF_4 group in AuF_3, which is 1.98(4) Å.) The gold atom in $KAuF_4$ is further coordinated by four other F atoms at 3.12(2) Å. The entire arrangement of eight F atoms about the Au atom can be described as a distorted cubic group. The square AuF_4^- species represents a pair of diagonally opposite parallel edges of the 'cube' (which has, in consequence, been distorted to render these edges, and the relating face diagonals, equal). The other two diagonally-opposite parallel edges of the original four-fold cubic set each represent two of the F atoms at 3.12 Å from the Au atom.

The coordination of the AuL_4 group in AuF_3 [in contrast to all of the other Au(III) compounds] by two other ligands approximately normal to the AuL_4 plane may account for the anomalously low isomer shift of AuF_3. In the square AuF_4 group of AuF_3, each of the additional F ligands is suitably located for π donation to the Au(III) atom. Thus if the pseudo-four-fold axis of the AuF_4 group is $\underline{z}$, the $\underline{d}_{\underline{zx}}$ and $\underline{d}_{\underline{zy}}$ orbital electrons of the Au(III) are more concentrated on that atom than

otherwise, as a consequence of the π donor ability of those two F ligands which are nearby on the $\underline{z}$ axis.

For a rough estimate of $|\langle r^2\rangle$ we take the isomer shift difference between the AuF_6^- complexes and AuF_3, $\Delta S = 3.4$ mm/s, as representative for the one between Au(V) and Au(III). It is obvious from the above discussion that for this pair of gold compounds the difference in effective coordination number is smaller than for any other pair of the studied gold compounds with different oxidation states. For the electron density difference between $5\underline{d}^6$ and $5\underline{d}^8$ configurations we take a value of $\Delta\rho(0) = 4.4 \times 10^{26}$ cm^{-3}, as estimated from the results of relativistic Dirac-Fock calculations of reference 22 for free-ion configurations of gold. We then obtain a value of $\Delta\langle r^2\rangle \simeq 8.6 \times 10^{-3}$ fm^2 for the change of the mean-squared nuclear charge radius. Because of the change in molecular structure from AuF_6^- to AuF_3, however, this value should be considered as a lower limit for $\Delta\langle r^2\rangle$. It is interesting that it agrees quite well with the result of reference 23.

ACKNOWLEDGEMENT

The authors are indebted to D. A. Shirley for valuable discussions and support of this work, as well as to J. B. Mann for communication of his Dirac-Fock results on free-ion configurations of gold. This work was supported by the U. S. Atomic Energy Commission.

References

† Present address: Physik-Department E15, Technische Universität München, D-8046 Garching, Germany.

1. K. Leary and N. Bartlett, J. Chem. Soc. Chem. Comm., 903 (1972).
2. K. Leary, A. Zalkin and Neil Bartlett, J. Chem.Soc. Chem. Comm. 131 (1973) and Inorg. Chem., in press.
3. A. H. Muir, K. J. Ando, and H. M. Coogan, Mössbauer Effect Data Index 1958-1965 (Interscience Publishers, N.Y., 1966).
4. M. O. Faltens and D. A. Shirley, J. Chem. Phys. 53, 4249 (1970).
5. H. D. Bartunik, W. Potzel, R. L. Mössbauer, and G. Kaindl, Z. Physik, 240, 1 (1970).
6. J. S. Charlton and D. I. Nichols, J. Chem. Soc. (A), 1484 (1970).
7. G. Kaindl, D. Kucheida, W. Potzel, F. E. Wagner, U. Zahn, and R. L. Mössbauer, in "Hyperfine Interactions in Excited Nuclei", eds. G. Goldring and R. Kalish (Gordon and Breach, New York, 1971), p. 595; and references therein.
8. G. Kaindl, W. Potzel, F. E. Wagner, U. Zahn, and R. L. Mössbauer, Z. Physik, 226, 103 (1969).
9. W. Potzel, F. E. Wagner, U. Zahn, R. L. Mossbauer, and J. Danon, Z. Physik, 240, 306 (1970).
10. F. E. Wagner and U. Zahn, Z. Physik, 233, 1 (1970).
11. G. M. Bancroft, M. J. Mays, and B. E. Prater, J. Chem. Soc. (A), 956 (1970).
12. A. G. Sharpe, J. Chem. Soc., 2901 (1949).
13. G. Kaindl, M. R. Maier, H. Schaller, and F. Wagner, Nucl. Instr. Meth. 66, 277 (1968).

14. J. Heberle and S. Franco, Bull. Am. Phys. Soc. 13, 60 (1968).

15. D. J. Erickson, L. D. Roberts, J. W. Burton, and J. O. Thomson, Phys. Rev. B3, 2180 (1971).

16. M. A. Hepworth, K. H. Jack, G. J. Westland, J. Inorg. & Nucl. Chem., 2, 79 (1956).

17. C. J. Adams and N. Bartlett, unpublished observation.

18. N. Bartlett, B. G. DeBoer, F. Hollander, F. O. Sladky, D. H. Templeton and A. Zalkin, submitted to Inorg. Chem.

19. F. E. Wagner, D. Kucheida, U. Zahn, and G. Kaindl, Z. Physik, in press.

20. D. Walcher, Z. Physik, 246, 123 (1971).

21. D. A. Shirley, Rev. Mod. Phys. 36, 339 (1964).

22. J. B. Mann, Los Alamos Scientific Laboratory of the University of California, private communication.

23. L. D. Roberts, D. O. Patterson, J. O. Thomson, and R. P. Levey, Phys. Rev., 179, 656 (1969).

24. H. Jagodzinski, Z. Krist., 112, 80 (1959).

25. M. Bonamico, G. Dessy and A. Vaciago, Atti Accad. Nazl. Lincei. Rend., Classe Sci. Fis. Mat. Nat. 39, 504 (1965).

26. N. Bartlett, Angew Chem. Int. Ed., 7, 433 (1968).

27. F. A. Cotton, G. Wilkinson, Advanced Inorganic Chemistry, 2nd Ed. (Wiley-Interscience) p. 379 (1966).

28. F. W. B. Einstein, P. R. Rao, J. Trotter, and N. Bartlett, J. Chem. Soc. (A), 478 (1967).

29. E. S. Clark, D. H. Templeton, C. H. MacGillavry, Acta Cryst., 11, 284 (1958).

30. A. J. Edwards, G. R. Jones, J. Chem. Soc. (A), 13, 1936 (1969).

TABLE I

Compilation of experimental results: ε = resonance effect, W = total experimental linewidth (FWHM); S = isomer shift relative to the platinum metal source; $E_Q = e^2 \cdot q \cdot Q(3/2)/2 \cdot (1 + \eta^2/3)^{1/2}$ = electric quadrupole splitting of the nuclear ground state of ^{197}Au.

Compound	ε (%)	W (mm/s)	S (mm/s)	E_Q (mm/s)
$Xe_2F_{11}AuF_6$	2.9	1.98 ± 0.02	2.28 ± 0.01	---
XeF_5AuF_6	4.0	2.10 ± 0.06	2.31 ± 0.02	---
$CsAuF_6$	2.8	2.02 ± 0.06	2.39 ± 0.02	---
AuF_3	4.6	2.00 ± 0.02	-1.06 ± 0.02	2.71 ± 0.02

0 0 0 0 3 9 0 0 7 8 9

Figure Captions

Figure 1: Mössbauer absorption spectrum of $Xe_2F_{11}^+AuF_6^-$, recorded with the 77.3 keV gamma rays of ^{197}Au, emitted from a metallic ^{197}Pt source. Both source and absorber were at 4.2°K. The solid line is the result of a least-squares fit of a Lorentzian line to the data.

Figure 2: Graphical representation of isomer shifts of the 77.3 keV gamma rays of ^{197}Au for univalent, tervalent, and quinquevalent gold compounds with halogen ligands.

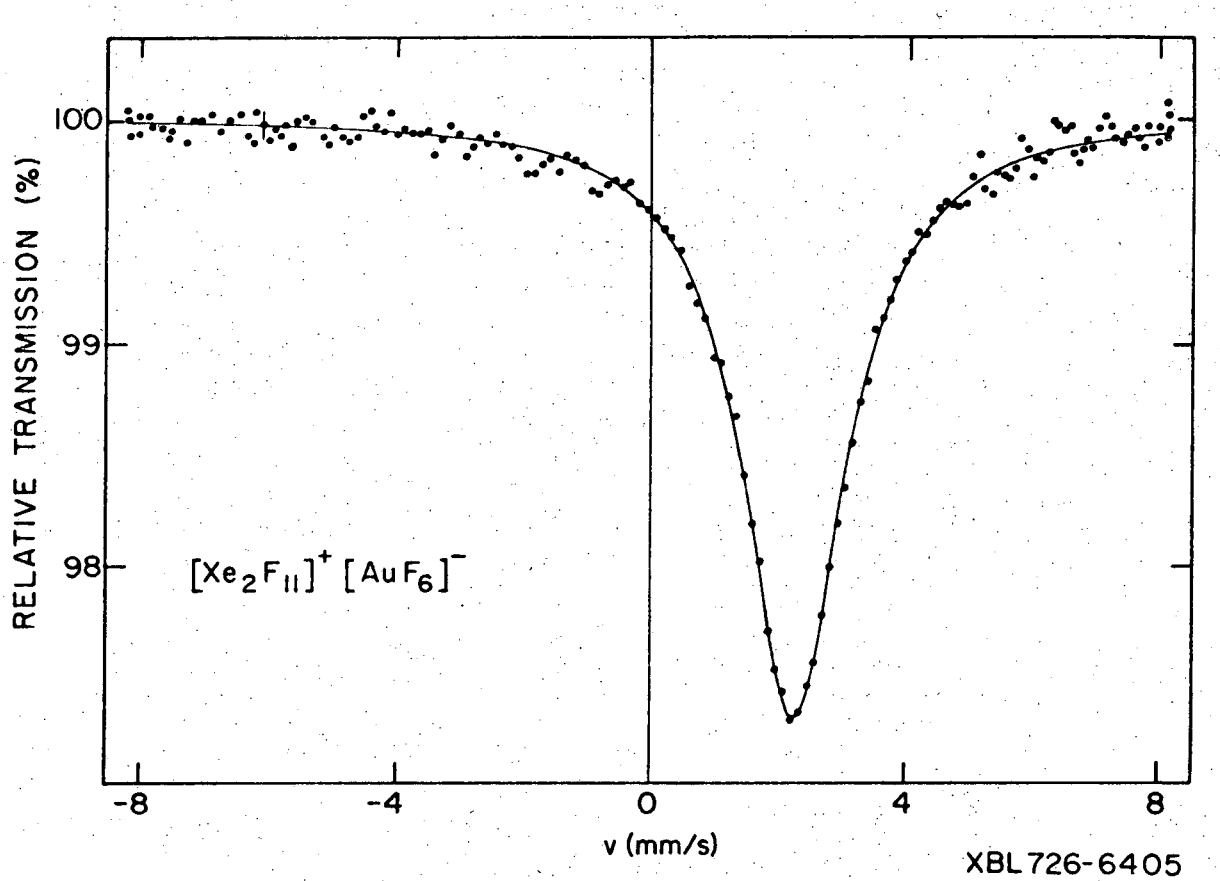
100
99
98
RELATIVE TRANSMISSION (%)
$[Xe_2F_{11}]^+ [AuF_6]^-$
-8
-4
0
4
8
v (mm/s)
XBL 726-6405

Fig. 1

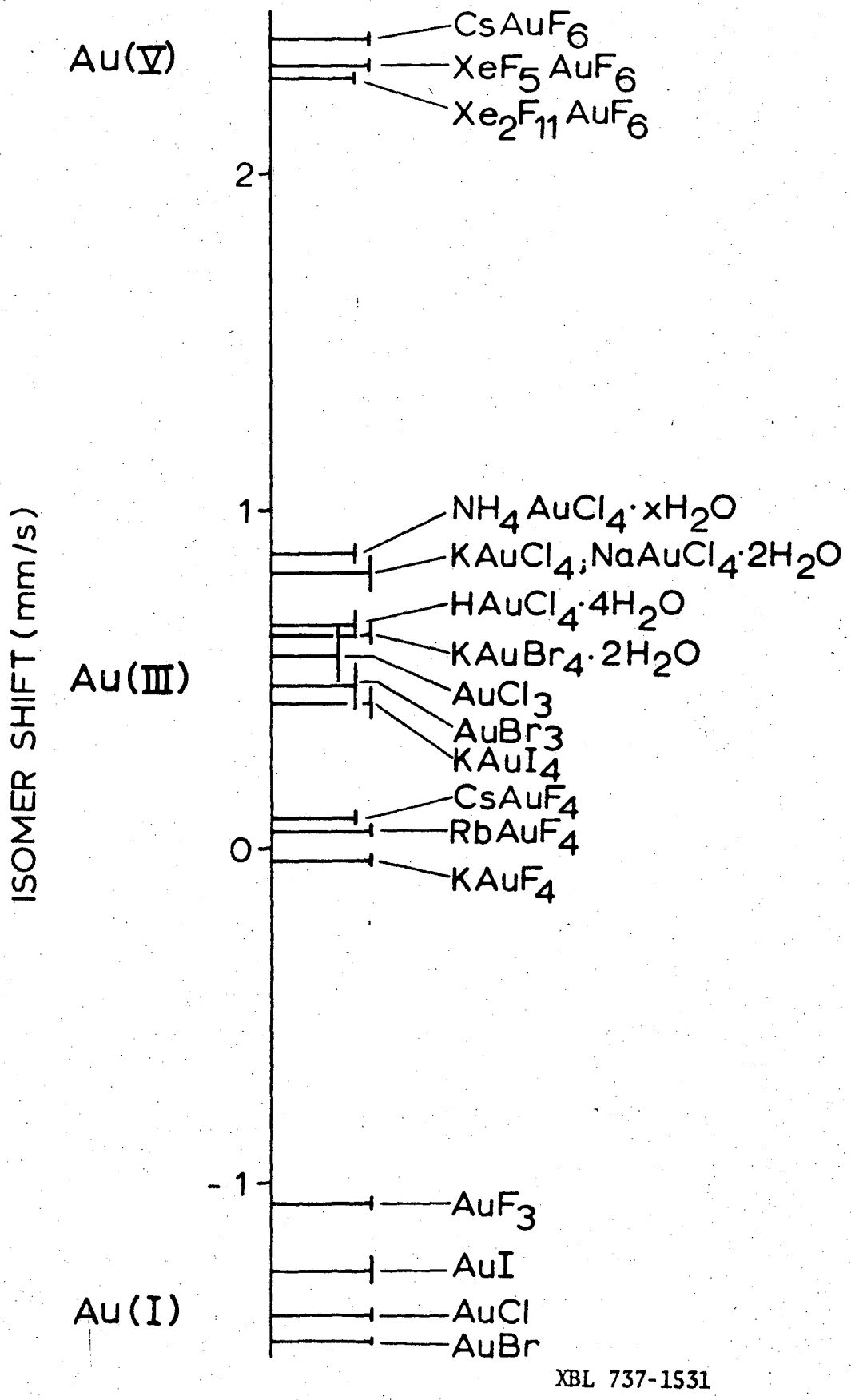

XBL 737-1531

Fig. 2

LEGAL NOTICE

This report was prepared as an account of work sponsored by the United States Government. Neither the United States nor the United States Atomic Energy Commission, nor any of their employees, nor any of their contractors, subcontractors, or their employees, makes any warranty, express or implied, or assumes any legal liability or responsibility for the accuracy, completeness or usefulness of any information, apparatus, product or process disclosed, or represents that its use would not infringe privately owned rights.

TECHNICAL INFORMATION DIVISION
LAWRENCE BERKELEY LABORATORY
UNIVERSITY OF CALIFORNIA
BERKELEY, CALIFORNIA 94720