Submitted to
Metallurgical Transactions

LBL-184
Preprint

Author's Reply to the Discussion of:
STRUCTURE AND MECHANICAL PROPERTIES OF TEMPERED MARTENSITE AND LOWER BAINITE IN Fe-Ni-Mn-C STEELS

D. Huang and G. Thomas

August 1971

AEC Contract No. W-7405-eng-48

TWO-WEEK LOAN COPY

This is a Library Circulating Copy which may be borrowed for two weeks. For a personal retention copy, call Tech. Info. Division, Ext. 5545

LAWRENCE BERKELEY LABORATORY
UNIVERSITY OF CALIFORNIA

LBL-184

25

DISCLAIMER

This document was prepared as an account of work sponsored by the United States Government. While this document is believed to contain correct information, neither the United States Government nor any agency thereof, nor the Regents of the University of California, nor any of their employees, makes any warranty, express or implied, or assumes any legal responsibility for the accuracy, completeness, or usefulness of any information, apparatus, product, or process disclosed, or represents that its use would not infringe privately owned rights. Reference herein to any specific commercial product, process, or service by its trade name, trademark, manufacturer, or otherwise, does not necessarily constitute or imply its endorsement, recommendation, or favoring by the United States Government or any agency thereof, or the Regents of the University of California. The views and opinions of authors expressed herein do not necessarily state or reflect those of the United States Government or any agency thereof or the Regents of the University of California.

Author's Reply to the Discussion of:

STRUCTURE AND MECHANICAL PROPERTIES OF TEMPERED MARTENSITE AND LOWER BAINITE IN Fe-Ni-Mn-C STEELS

D. Huang* and G. Thomas†

Inorganic Materials Research Division, Lawrence Berkeley Laboratory and Department of Materials Science and Engineering, College of Engineering
University of California, Berkeley, California

In the discussion to our paper we believe that insufficient attention has been given to established structure-property relationships and that our own results, together with those of other authors, have been misinterpreted. In addition, some data quoted by the discussor to comment our results are not very appropriate because the steels in question do not have comparable compositions. Consequently, it is necessary to clarify the situation by discussing the issues separately as follows.

The discussor is not correct in stating that our results do not pertain to lower bainite. For example, the morphological and crystallographical differences between lower and upper bainite have long been recognized (e.g. Refs. 1, 2). In upper bainite the carbides frequently form as elongated particles between the bainitic ferrite laths, while in lower bainite, the carbides tend to precipitate at an angle of 55-65° to the major growth direction, or longitudinal axis, of the bainitic ferrite grain. This characteristic bainite morphology was quoted by Kalish in his own recent paper[3] to distinguish upper and lower bainite. However, by ignoring the microstructural and crystallographical evidence of lower bainite that was presented in our paper, Figs. 13(a) and 13(b) thereof, he suggested

---

*Graduate Student

†Professor of Metallurgy

that we might be dealing with upper bainite whereas in fact we had lower bainite. The basis for his argument was that lower bainite would not form above 650° to 700°F and that a fully lower bainitic structure could not possibly have been obtained in our steels by transformation at 610°, 710° and 720°F. However, as stated very clearly by Shackleton and Kelly,[2] the 650° to 700°F transition temperature interval of lower to upper bainite is not a strict limit which applies to all steels. This is not difficult to understand, because the effect of alloying elements upon the individual C curves of the TTT diagrams differ quite markedly and may shift this transition temperature interval up or down. As an example, the 750°F (400°C) isothermal transformation product of Fe-5Ni-.38C steel showed a structure that was more characteristic of lower bainite.[4] The morphology and orientation relationship typical of lower bainite was observed in 0.1C and 0.2C steels when transformed at 840°F (450°C).[5] There are also cases where upper bainite does not form at all. According to Pickering,[5] the maximum temperature above which no lower bainite forms depended on the carbon content of the alloy. His results showed that it is about 900°F for 0.25C steel. Since the lower to upper bainite transition temperature varies from steel to steel, one must distinguish upper and lower bainite metallographically in the electron microscope, and not imply structure from unknown transition temperatures. In our paper the metallographic results clearly showed that only lower bainite was obtained and only these structures pertain to the toughness comparisons with tempered martensite.

In order to provide further evidence to support our work, we have now purposely isothermally transformed some of our steels at a higher temperature to show the microstructure of upper bainite in our steels. After

transforming at 820°F for 24 hours, steel 804 (.26C-5Ni-Fe) demonstrated a mixed structure of upper and lower bainite. Figure 1(a) shows an area typical of upper bainite, consisting of long carbide stringers lying parallel to the long dimension of the bainite laths. Similarly, a mixture of predominininantly lower bainite together with very small amounts of upper bainite were observed in steel 807 (.25C-3Mn-Fe) when isothermally transformed at 820°F for 24 hours. Typical areas of upper bainite in steel 807 are shown in Fig. 1(b) where the carbides are elongated along the sub and grain boundaries of the dislocated ferrite. Also, the orientation relationship observed here between cementite and upper bainitic ferrite in these examples was not that known for lower bainite, i.e., the Bagaryatskii relationship. A distinct difference in microstructure and morphology between upper and lower bainite can be seen by comparing Figs. 1 and 2 here with Fig. 13(a) and 13(b) of our paper. Since we have never observed any upper bainite in any of our steels transformed in the lower bainite temperature range, further discussion of the bainite point is unnecessary.

As for the toughness measurements, Ronald[6] has shown that the tempered martensite embrittlement in 4340 steel may be revealed by V-notched and precracked Charpy specimens, but no embrittlement-associated fall in toughness of 4340 steel was observed using standard size precracked Charpy samples tested in <u>slow bend</u>. In his <u>impact</u> test the precracked specimens showed lower toughness than that of V-notched specimens but similar variations of toughness with tempering temperature were observed (Fig. 3 of Ronald's paper). Ronald did <u>not</u> indicate, as Kalish misquoted in his discussion that "the relative fracture toughness of 4340 steel, tempered at different temperatures, can be reversed in going from a Charpy V-notch to a precracked <u>impact</u> test." In our paper, Charpy V-notched impact tests

(not slow bend tests) were employed, and so the point raised by Kalish is thus totally irrelevant. Charpy V-notched specimens have been widely used for impact toughness testing for many years. It is agreed that the total energy of crack initiation plus crack growth is measured in V-notched specimens without precracking. However, the relative toughness of two materials is not reversed by changing from a V-notched to a precracked impact test at the same testing temperature.

In order to illustrate these points, some toughness tests on precracked specimens were carried out, and to further support our impact toughness data presented in the original paper. The fracture specimens used were modified wedge opening loading (WOL) type which have been extensively employed in our laboratory. The dimension of the specimen is shown in Fig. 2 and the thickness is half an inch. This specimen design is often referred to as the compact tension specimen for fracture testing[7] which was discussed by Wessel[8] and for which the stress intensity factors were determined by Srawley and Gross[9] using the boundary collocation procedure. Specimens of steel 805 (.26C-5Ni-2Mn-Fe) were made and heat treated in the identical way as described in the original paper. The final structures obtained were the 800°F/(2+2)hr tempered martensite and 610°F/24hr isothermally transformed lower bainite. Both possessed a yield strength of about 135 ksi. The tests were performed on a Materials Testing System (M.T.S.) 300 kips capacity universal testing machine with cross head speed of 5×10^{-4} inch/sec. All the fracture specimens were pre-fatigue cracked at a sufficiently low load to allow a minimum of 10,000 cycles to grow the fatigue crack at a cycling rate of 6 cycles per second. The fatigue crack generated this way is thus very sharp and will be referred to as precracked specimen. A crack opening displacement (C.O.D.) gauge, discussed by Brown

and Srawley,[10] was also used to monitor the crack opening with increasing load. The testing and the analysis of the obtained data followed standard procedures.[7,8,9,10] The result of fracture toughness of steel 805 is listed as follows in Table I.

Table I. Fracture Toughness values of Tempered Martensite and Bainite at Similar Strength Levels

	800°F/(2+2)hr Tempered Martensite	610°F/24hr Lower Bainite
K_Q at 25°C (77°F) ksi-in$^{1/2}$	103.8	88.8
K_{IC} at -196°C (-320°F) ksi-in$^{1/2}$	54.9	31.3

Due to the limitation of thickness of the specimen, plane strain conditions were not obtained at room temperature so that they are reported as K_Q. It can be seen that the tempered martensite possesses higher fracture toughness than that of lower bainite. This result further confirmed our original report. Valid plane strain K_{IC} values were obtained at liquid nitrogen temperature (-320°F). Again, the results (Table I) showed that tempered martensite is tougher than lower bainite. The superiority of tempered martensite over lower bainite was also observed in tests between room temperature and liquid nitrogen temperature but the results are not presented here. Together with the new results of Table I, the microstructural examination and the Charpy V-notch impact data previously reported in our paper, it is evident that irrespective of the type of specimens whether precracked or V-notched, the testing temperature and also the various strain rates, the dislocated tem-

pered martensite always possesses higher toughness than that of isothermally transformed lower bainite of the same steel at similar strength level. It has been one of the objectives of our series of research programs on structure and mechanical properties of steels to draw attention to these microstructural factors (see also Ref. 11).

With reference to the fracture of tempered martensite and lower bainite, it is not surprising at all that the tempered martensite showed a dimpled rupture and the lower bainite showed a cleavage failure even though both consist of ferrite laths separated by low angle boundaries. Kalish does not account for the fact that both the volume fraction and the mode of dispersion of the carbide are very important in controlling fracture, i.e., whether the material fails by cleavage or by dimpled rupture. At the same volume fraction of carbides, a fine uniform dispersion of the Widmanstatten cementite (as observed in our low Mn tempered martensite) will favor dimpled rupture as compared to the coarse unidirectional cementite (as detected in our lower bainite). This is not only confirmed by the fractographic examination but also supported by the toughness data. As we showed earlier, the .25C tempered martensite exhibited dense 3 families of {110} Widmanstatten cementite precipitates in ferrite and gave a dimpled fracture surface. In the lower bainite of the same steel (.25C), few coarse widely spaced unidirectional carbides were observed and the fracture mode was mixed dimple and cleavage or typical herringbone cleavage fracture. This is because after the cleavage cracks initiate (e.g., at the carbide-matrix interfaces), either the low angle boundaries between the neighboring ferrite laths or the widely spaced unidirectional carbides in bainite do not have a strong blocking effect in diverting the direction of the

crack which can subsequently retard the crack propagation. Thus, the cleavage crack can cross from one ferrite grain to another without much deviation in direction, until it is finally arrested, e.g. at prior austenite grain boundaries. In this case, some deformation and ductile fracture occurs until a new crack is generated, as pointed out earlier.[5] By this way predominantly cleavage with some dimples were observed on the fracture surface of lower bainite. Dimpled rupture in .25C tempered martensite of different steels but possessing a structure similar to those under discussion was also reported in samples tested at -196°C.[11] Dimples of even higher energy would be expected for room temperature tests. The low carbon martensites[11] also showed bundles of laths with alternate [100] and [111] orientations similar to those observed by Inoue et al.[12]

It is improper to compare the data of Inoue et al.,[12] with ours because of the following reasons. The paper of Inoue et al.,[12] cited by Kalish is an extension of their early study in 1968.[13] By carefully examining these two papers, it can be seen that the main interest was to investigate the cleavage fracture in .12C tempered martensite. Therefore, they purposely tested the specimens <u>below</u> the brittle-ductile transition temperature (Photo 2 of reference 13) so as to obtain a cleavage fracture. Inoue et al., also showed an example of dimpled ductile rupture when the testing temperature was -40°C, which was <u>above</u> the brittle-ductile transition temperature of that particular heat treated steel (Photo 7 of reference 12). Some of their micrographs showing cleavage or ductile dimpled fracture were presented without specifying the testing temperature. It is not certain what the fracture mode of their 0.12C tempered martensite is when tested at room temperature. However, they have reported that the brittle-ductile transition temperature is a function of austenite grain size or the corresponding

"mean spacing of the heavy tear lines." Their results showed the transition temperature varied from -45°C to about -180°C when the austenite grain size changed from ASTM No. -1 to No. 12 corresponding to the austenitizing temperature of 1300°C to 835°C (see Ref. 13 for details). In addition to the difference in carbon content between theirs and our alloy (.12 versus .25C), the heat treatments are also different, which according to them, directly affects the grain size and thus the brittle-ductile transition temperature. Therefore, it is not appropriate to compare their results with ours especially when the testing temperature may be different. Furthermore, a lower volume fraction of carbide would be expected in a .12C tempered martensite than that in a .25C tempered martensite which also affects the fracture mode as mentioned earlier.

It should be noticed that in Liu's work,[14,15] a relatively higher carbon containing steel (9Ni-4Co-.45C) was used. In his bainite of .45C steel the volume fraction of the carbides is high (Fig. 1b of reference 15) compared to fewer and coarser carbides observed in our .25C steel. Since the strength levels of the .45C and .25C steels are quite different, it is expected that different fracture mode would be observed. Again, the carbide and the ferrite morphology is also completely different between tempered .45C twinned martensite and .25C dislocated martensite. Obviously they will demonstrate dissimilar carbide morphologies and dissimilar fracture characteristics. It is quite true that carbide precipitation along the lath or twin boundaries promotes fracture and we have reported this for our high manganese alloy.

Thus in summary, although microstructure strongly affects mechanical properties and it is very important in comparing martensite to bainite that account is properly made of substructure (twins, dislocations, car-

bides, etc.,) we should emphasize that steels of similar microstructure but different compositions do not necessarily either posses similar toughnesses, or demonstrate identical fracture modes.

ACKNOWLEDGMENT

The support of the United States Atomic Energy Commission through the Lawrence Berkeley Laboratory is gratefully acknowledged.

REFERENCES

1. ASTM Proc., 1952, vol. 52, p. 543.
2. D. N. Shackleton and P. M. Kelly: Spec. Rept. No. 93, 1965, p. 126, The Iron and Steel Institute, London.
3. D. Kalish, M. Cohen and S. A. Kulin, J. Materials, 1970, vol. 5, p. 169.
4. J. M. Chilton and G. R. Speich, Met. Trans, 1970, vol. 1, p. 1019.
5. F. B. Pickering, symposium: Transformation and Hardenability in steels, p. 109, Climax Molybdenum Co., 1967.
6. T. M. F. Ronald, Met. Trans., 1970, vol. 1, p. 2583.
7. "Proposed Method of Test for Plane-Strain Fracture Toughness of Metallic Materials", ASTM Standards, 1969, vol. 31, p. 1099.
8. E. T. Wessel, "State of the Art of the WOL Specimen for K_{IC} Fracture Toughness Testing", Eng. Fracture Mech., 1968, vol. 1, p. 77.
9. J. E. Srawley and B. Gross, "Stress Intensity Factors for Crackline-loaded Edge-crack Specimens", NASA TD-3820, 1966.
10. W. F. Brown and J. E. Srawley, "Plane Strain Crack Toughness Testing of High Strength Metallic Materials", ASTM STP No. 410, 1967.
11. S. K. Das and G. Thomas, Trans. ASM, 1969, vol. 62, p. 659.
12. T. Inoue, S. Matsuda, Y. Okamura and K. Aoki, Trans. Japan Inst. Met., 1970, vol. 11, p. 36.
13. S. Matsuda, T. Inoue and M. Ogasawara, Trans. Japan Inst. Met., 1968, vol. 9, p. 344.
14. Y. H. Liu, Trans. ASM, 1969, vol. 62, p. 55.
15. Y. H. Liu, Trans. ASM, 1969, vol. 62, p. 544.

FIGURE CAPTIONS

Fig. 1 Upper bainite region of (a) steel 804, (b) steel 807 after isothermally transformed at 820°F for 24 hr. Both show typical upper bainitic carbide and ferrite.

Fig. 2 The dimension of the two pin-wedge opening loading specimen. Thickness of the specimen is 1/2 inch.

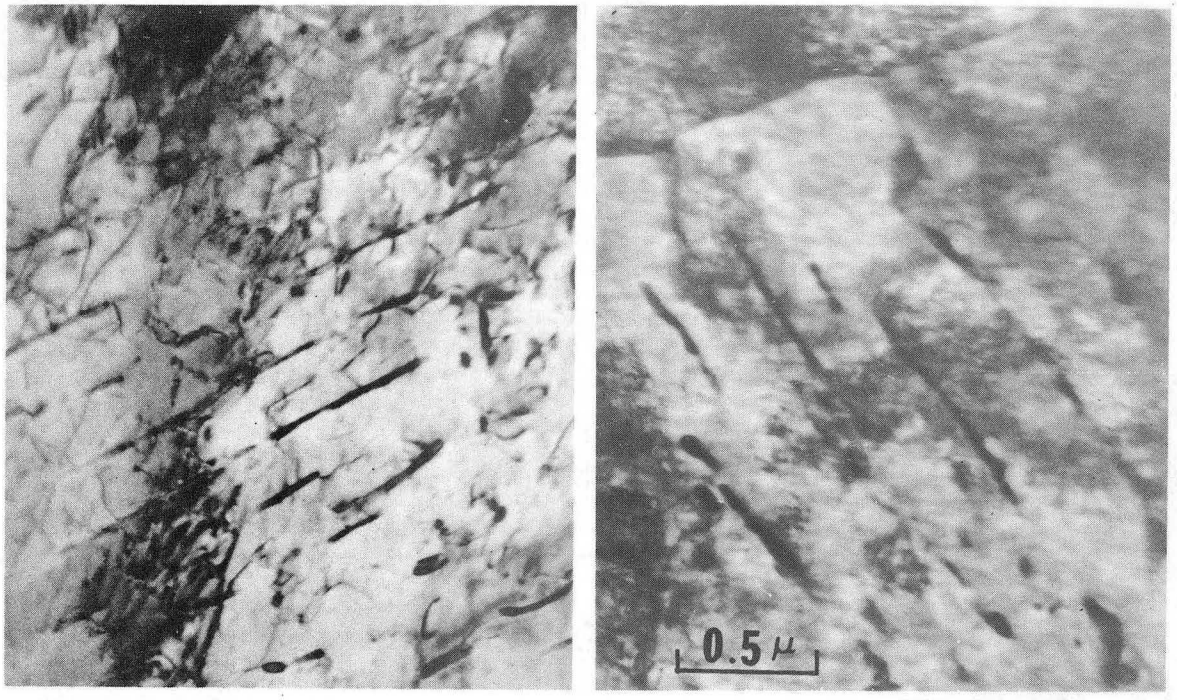

XBB 718-3579

Fig. 1

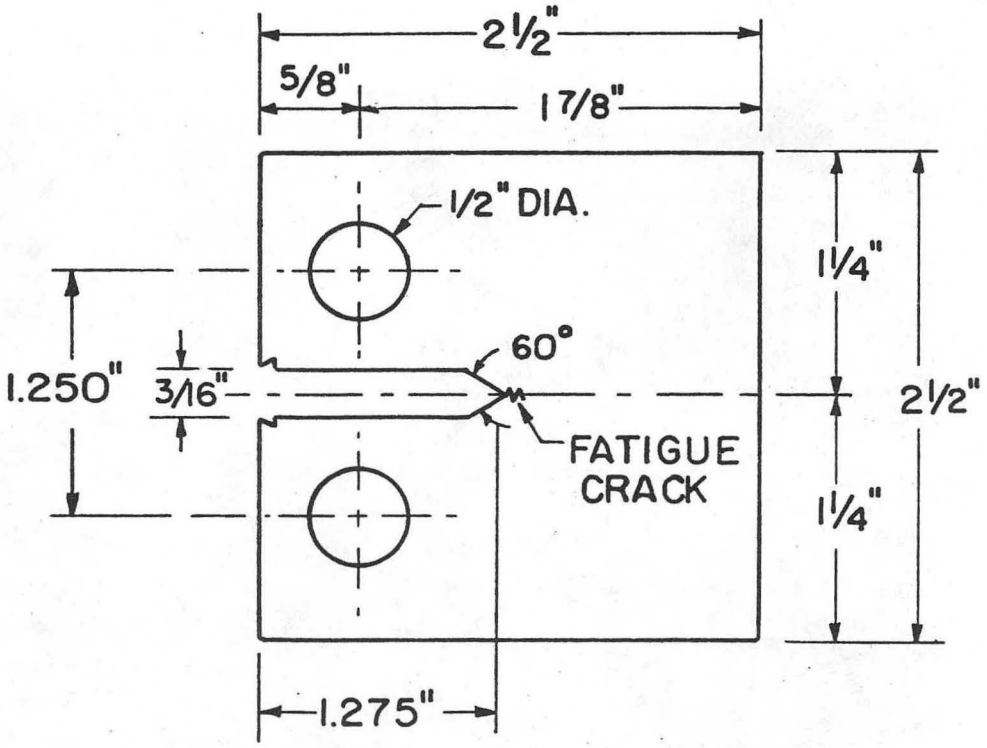

XBL 717-7087

Fig. 2

LEGAL NOTICE

This report was prepared as an account of work sponsored by the United States Government. Neither the United States nor the United States Atomic Energy Commission, nor any of their employees, nor any of their contractors, subcontractors, or their employees, makes any warranty, express or implied, or assumes any legal liability or responsibility for the accuracy, completeness or usefulness of any information, apparatus, product or process disclosed, or represents that its use would not infringe privately owned rights.

TECHNICAL INFORMATION DIVISION
LAWRENCE BERKELEY LABORATORY
UNIVERSITY OF CALIFORNIA
BERKELEY, CALIFORNIA 94720