LBL-18952
c.2

Lawrence Berkeley Laboratory
UNIVERSITY OF CALIFORNIA

Accelerator & Fusion Research Division

RECEIVED
LAWRENCE
BERKELEY LABORATORY
OCT 18 1985
LIBRARY AND
DOCUMENTS SECTION

Presented at the 1985 Particle Accelerator Conference,
TRIUMF, Vancouver, B.C., Canada, May 13-16, 1985

WOBBLER DOSIMETRY FOR THE BIOMEDICAL PROGRAM AT THE LBL BEVALAC

W. Chu, M. McEvoy, M. Nyman, T. Renner,
B. Gonzales, R.P. Singh, and R. Stradner

May 1985

TWO-WEEK LOAN COPY
This is a Library Circulating Copy
which may be borrowed for two weeks.

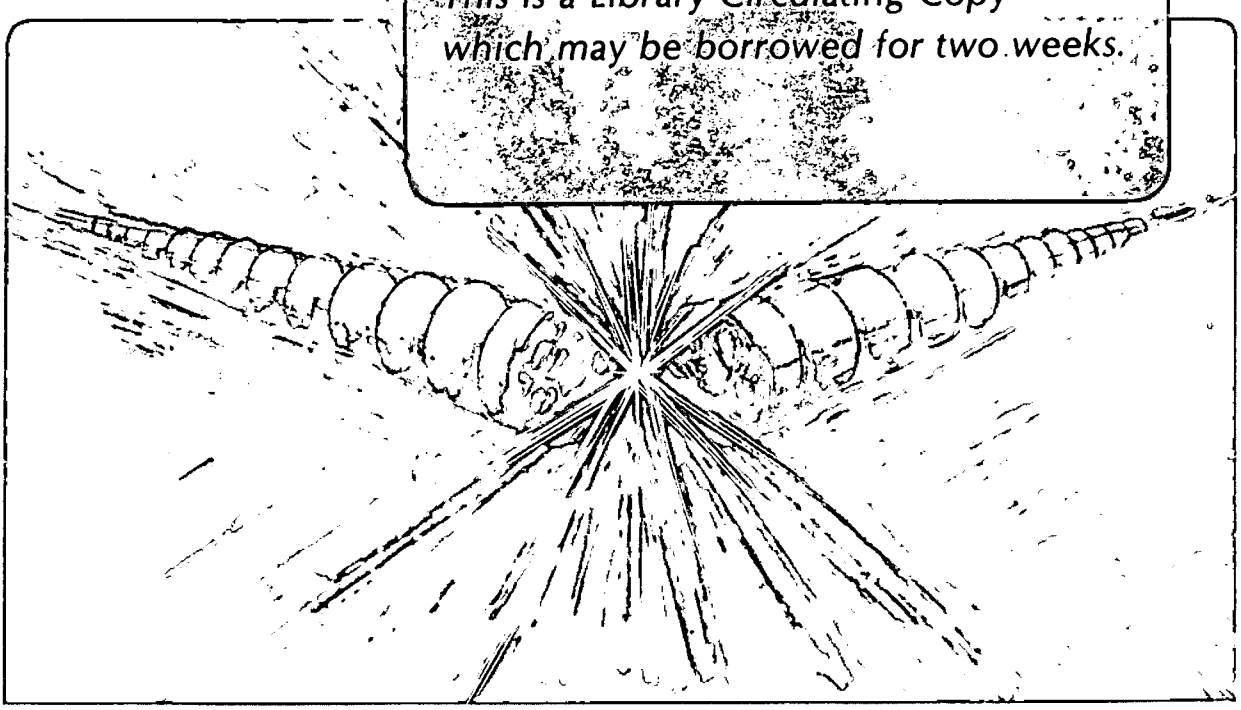

Prepared for the U.S. Department of Energy under Contract DE-AC03-76SF00098

LBL-18952
c.2

DISCLAIMER

This document was prepared as an account of work sponsored by the United States Government. While this document is believed to contain correct information, neither the United States Government nor any agency thereof, nor the Regents of the University of California, nor any of their employees, makes any warranty, express or implied, or assumes any legal responsibility for the accuracy, completeness, or usefulness of any information, apparatus, product, or process disclosed, or represents that its use would not infringe privately owned rights. Reference herein to any specific commercial product, process, or service by its trade name, trademark, manufacturer, or otherwise, does not necessarily constitute or imply its endorsement, recommendation, or favoring by the United States Government or any agency thereof, or the Regents of the University of California. The views and opinions of authors expressed herein do not necessarily state or reflect those of the United States Government or any agency thereof or the Regents of the University of California.

WOBBLER DOSIMETRY FOR THE BIOMEDICAL PROGRAM AT THE LBL BEVALAC*

LBL-18952

W. Chu, M. McEvoy, M. Nyman, T. Renner, B. Gonzales, R. P. Singh, and R. Stradner
Lawrence Berkeley Laboratory
University of California
Berkeley, California 94720

Abstract

A system for measuring delivered dose and dose distributions has been developed for use with the wobbler beam delivery system. The system allows rapid termination of an irradiation when hardware of software monitors indicate the required dose has been delivered. In addition several safeguard systems are required by such an active system in event of a failure of the wobbler, associated electronic hardware or the computer. Computer graphic displays allow operator monitoring of the irradiation on a pulse by pulse basis.

Introduction

The wobbler beam delivery system is a beam delivery system using two dipole magnets to provide radiation fields up to 30 centimeters in diameter for the treatment of cancer patients at the Bevalac. [1] The two magnets with perpendicular fields are supplied with sinusoidally varying currents of 60 Hertz 90 degrees out of phase with one another. The heavy ion beam extracted from the Bevalac passes through the magnetic fields and is swept in a circular fashion producing annular shaped dose distributions at some specified radius. These "dough-nut" shaped radiation fields can then be combined with one another to produce a total radiation field that is uniform to within 5%. Varying field sizes can be made by varying the number of distributions or wobbles added together. Figure 1 illustrates the principal of the wobbler.

The dynamic nature of the wobbler beam delivery system requires a special design of the dosimetry and the safety systems monitoring equipment failure. The expected use of this system with cancer patients demands redundancy and reliability.

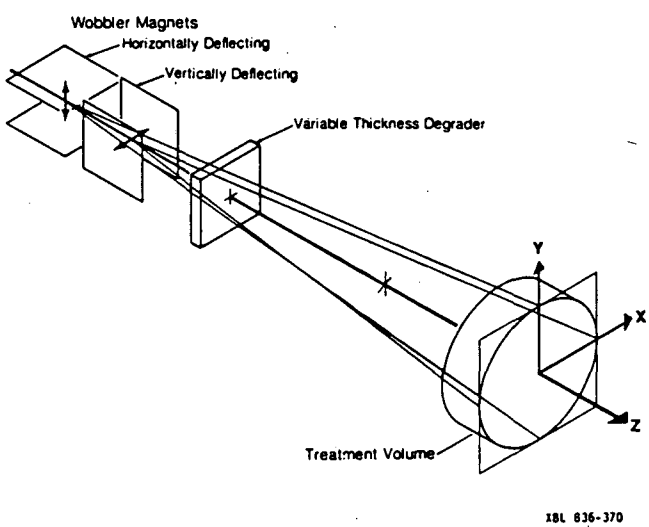

Fig. 1

*This work was supported by the U. S. Department of Energy under Contract No. DE-AC03-76SF00098 and in part by the National Institute of Health under Grant CA15184.

Monitoring

The wobbler dosimetry system is set up to monitor on a pulse by pulse basis (a typical Bevalac pulse is one second long delivered every four seconds) the dose, its spatial distribution and its location. The monitoring is of three types: computer, hardware, and human. Each type has a typical response time that does either primary monitoring of a particular control parameter or backup monitoring. The rationale for each is dictated by the dynamic nature of the delivery system, i.e. not all parts of the radiation field are uniformly irradiated simultaneously. A failure of one of these systems has the potential of delivering the entire required dose in a localized area in less than a full beam pulse. Such an occurrence cannot be tolerated. The wobbler control system consisting of detectors, computer, and special hardware are designed to prevent such an occurence.

The relevant control parameters of this system are: 1) the dose delivered and its uniformity, 2) the radius of an individual wobble and the resulting dose distribution, and 3) the alignment of the beam on a pulse by pulse basis and the variation of its intensity during the beam pulse. Control of the first parameters provide the clinician with the ability to give a prescribed dose over the entire tumor volume. The second set of parameters must be adequately controlled in order that the sum of the individual distributions in fact produce a uniform field of radiation with no overdoses or underdoses to any localized areas. The final set pertain to the extraction of the beam from the accelerator and insure concentric dose distributions, as well as azimuthally symmetric distributions. An uneven extraction of the beam from the Bevalac can result in nonuniform spatial dose distribution of a wobbled beam.

Any problem detected by a monitoring system has one of two consequences: the beam is immediately clamped within 50 microseconds of the error detection, (fast clamp), or clamped after the completion of a beam pulse (slow clamp). The actual clamping of the beam is done by turning off the extraction magnets. The final monitor of the system is of course the human operator who can terminate the beam at any time with a button which initiates a fast clamp. In cases where the required dose has been delivered or the operator interrupts the beam a physical beamstop is inserted into the beam line while the extraction magnets are turned off.

Beamline

The beamline layout is shown in Figure 2. The active beam measuring devices are three multisegmented ionization chambers, a secondary emission monitor, and two wire chambers. These detectors are nonintrusive in that they make only small changes in the range of the beam (altogether less than 0.5 mm of water) and do not effect the dose distributions. The beam entering the treatment room travels through these devices to the patient. The wobbler magnets lie in between two sets of detectors so that the beam before and after can be monitored. In addition a column of water whose thickness can be varied is placed after the wobbler to adjust the range of the beam to fit the individual patient

prescription. The final device placed in the beamline is called a ridge filter; its function is to modulate the range (Bragg peak) of the beam to cover the patient tumor with stopping particles.

The wire chambers are part of the Bevalac control system that allows tuning of the beamline. Because the initial shape of the beam is critical for obtaining the right dose distributions when wobbling the beam, a comparison between the beam profile and a desired profile is displayed for the operator as shown in Figure 3. The desired profile is the smooth curve. In addition the centroid of the beam can be aligned relative to the axis used to position the patient.

before and after the wobbler is characterized by these two chambers. The secondary emission monitor (SEM) placed before the wobbler serves as an independent detection system of the total flux delivered to the patient. It is calibrated daily against an ionization chamber.

The primary dose measuring devices are segmented ionization chambers. There are three in the system; each one having a different function. The first chamber (IC1), located at the entrance of the therapy room, consists of two collecting foils: the first is divided into quadrants and the second is divided into seven concentric rings. The quadrants measure the

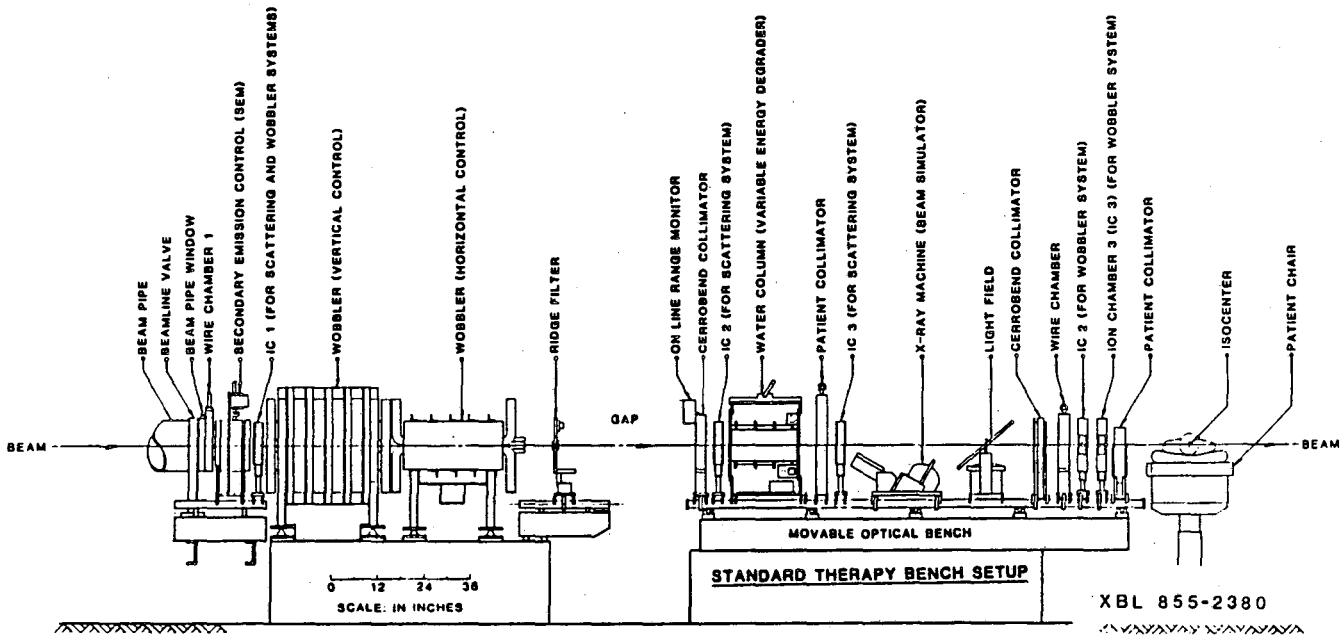

Fig. 2

alignment of the beam and by summing the quadrants the total flux is measured. The rings measure the distribution of the beam. The second chamber (IC2) consists of a foil segmented into 22 elements each of two square centimeter area which lie horizontally in a line perpendicular to the beam. They serve to accurately measure the dose profile of the beam. A good example of the output of this device is shown in Figure 4. This chamber is also used in the calibration of the radius of a wobble as shown in Figure 5.

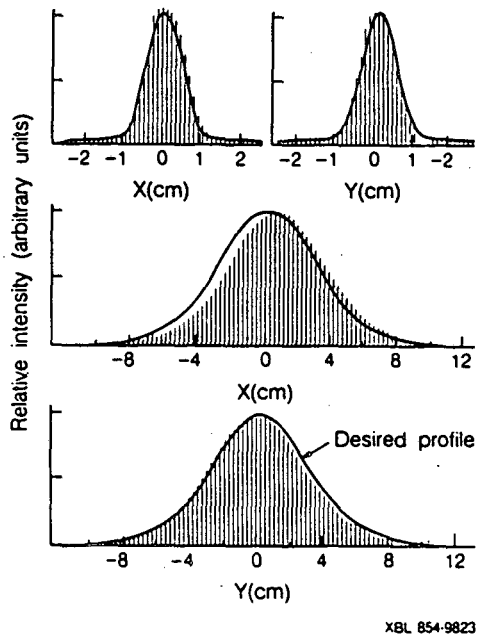

Fig. 3

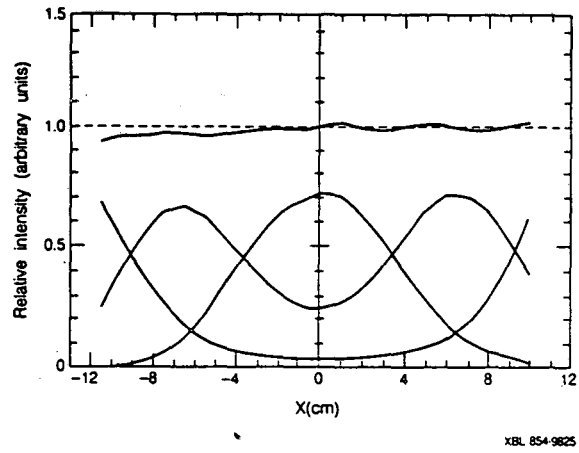

Fig. 4

The first wire chamber (WC1) has wire spacings of 6 mm; the second wire chamber (WC2) consists of wires 4 mm apart for increased spatial resolution. The active area of the second chamber is 30 cm in diameter to accommodate the large wobbled beams. The beam

The third ionization chamber (IC3), just upstream of the patient, is segmented into twenty two hexagonal shapes which are used to measure the beam uniformity over an area 30 cm in diameter. The chamber is also used to measure the position of the

beam at the location of the patient. This is done by monitoring four selected elements symmetrically located about the beam center. The final centering of the beam is then done with the quadrants of IC1 and the four elements of IC3. A graphics display of the alignment is provided to the operator; the beam centroid can be aligned to within 2 mm.

Three elements of IC3 along with the SEM and the sum of the quadrants of IC1 measure the dose delivered during each wobble of the beam. The latter two measure the total flux distributed by the wobbler. The former (IC3) detects the wobbled beam and checks each wobble's dose distribution at three radial distances from the beam center. All five detectors are monitored either by special hardware or the computer and can initiate a fast or slow clamp of the beam.

Several other monitoring devices are involved in the control system. A measurement of the Bevalac field and RF frequency is made on a pulse by pulse basis to insure the energy of the beam is stable and hence that the range of the beam dose not change. A range change could adversely affect patient treatment especially in cases where tumors are located near critical organs. A second monitor measures the wobbler current and hence the wobbler field; a failure of the power supply or an incorrect current leads to a nonuniform radiation field. Wobbler currents are held to within 2% of the required value. In addition to the software and hardware monitoring, an independent set of scalers monitor the five primary dose monitors and can also initiate a clamp of the beam. In a normal patient treatment one or more of the five primary dose monitors would terminate the irradiation by initiating a fast clamp of the beam at the required dose.

Control System

The control system layout is straightforward. The ionization produced by the beam in each active element is collected and converted to NIM pulses with a recycling integrator. Conventional scalers count these pulses and are read by the computer via CAMAC. The flow of data from the detectors is through a distribution system to the hardware monitors and computer. Storage of the data on disc is done after each dose distribution is delivered. If at any time an interruption of a treatment occurs the remaining treatment can be finished at a later time. A special hardware monitor checks that the computer is operational at the beginning and end of each beam pulse; otherwise, the beam is clamped. Similarly the computer periodically monitors all the CAMAC hardware and notifies the operator if errors are detected. A set of timing points define the Bevalac beam cycle; the status of all hardware systems can be monitored by the operator through a set of LEDs showing the current state of the system at each time point.

The wire chamber data collected by the Bevalac computers is exchanged with the data collected by the Biomed computer on a pulse by pulse basis. In this way both systems monitor the beam during a patient irradiation. The beam clamping system is controlled by either the Biomed or the Bevalac control system. An extremely useful feature of the control system is its simulation capability. A programmable circuit allows injection of charge into each element of each detector which can then be read back by the control system as if produced by real beam. All timing is identical to normal timing during Bevalac running. A safety interlock that is part of the radiation safety system prevents confusing or intermingling the real with the simulated beam.

Calibration

The calibration of the wobbler beam delivery system falls into two parts: dosimetry and magnet calibration. The dosimeters is calibrated daily with a uniform radiation field of a given size by measuring the response of each detector versus the response of a calibrated ionization chamber placed at the patient position. This calibration is subsequently scaled by the requested dose to set the necessary parameters for a treatment.

The second calibration involves determining what wobbler magnetic field will produce wobbled distribution of a desired radius. This calibration is a function of the wobbler magnetic field and the beam's magnetic rigidity. The procedure consists of operating the wobbler at a series of magnet currents, collecting data for each setting from IC2, fitting each set of data to a model, and extracting a radius for each distribution. The radius versus the magnet current is then known. A picture of such a calibration is shown in Figure 5.

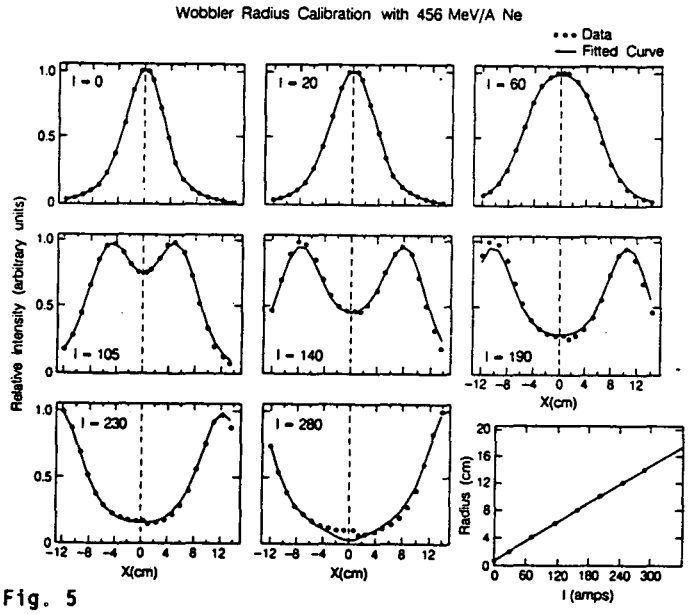

Fig. 5

A computer model of the wobbling process then predicts the necessary radii and fraction of the total flux is needed for each wobble, to give a uniform field of specified diameter. Final adjustments of these parameters can be made with the actual beam.

Summary

The control system has been thoroughly tested with a heavy ion beam of neon at an energy 585 Mev per nucleon having a range in water of 25.8 cm. The failsafe systems have been tested and have successfully clamped the beam when a failure was detected. The reliability and consistency of the system has been tested by repeated use over a number of months. The next step is the actual use of the wobbler beam delivery system with patients.

Reference

[1] W. T. Chu, S. B. Curtis, J. Llacer, T. R. Renner, R. W. Sorenson, Wobbler Facility for Biomedical Experiments at the Bevalac, elsewhere in these Proceedings.

This report was done with support from the Department of Energy. Any conclusions or opinions expressed in this report represent solely those of the author(s) and not necessarily those of The Regents of the University of California, the Lawrence Berkeley Laboratory or the Department of Energy.

Reference to a company or product name does not imply approval or recommendation of the product by the University of California or the U.S. Department of Energy to the exclusion of others that may be suitable.

TECHNICAL INFORMATION DEPARTMENT
LAWRENCE BERKELEY LABORATORY
UNIVERSITY OF CALIFORNIA
BERKELEY, CALIFORNIA 94720