LBL-19033 c.2

Lawrence Berkeley Laboratory

UNIVERSITY OF CALIFORNIA

RECEIVED
LAWRENCE
BERKELEY LABORATORY

APR 25 1985

LIBRARY AND
DOCUMENTS SECTION

Accelerator & Fusion Research Division

Presented at the Workshop on Accelerators for Charged-Particle Beam Therapy, Batavia, IL, January 24-25, 1985

HEAVY ION MEDICAL ACCELERATOR OPTIONS

R.A. Gough and J.R. Alonso

January 1985

TWO-WEEK LOAN COPY

This is a Library Circulating Copy which may be borrowed for two weeks.

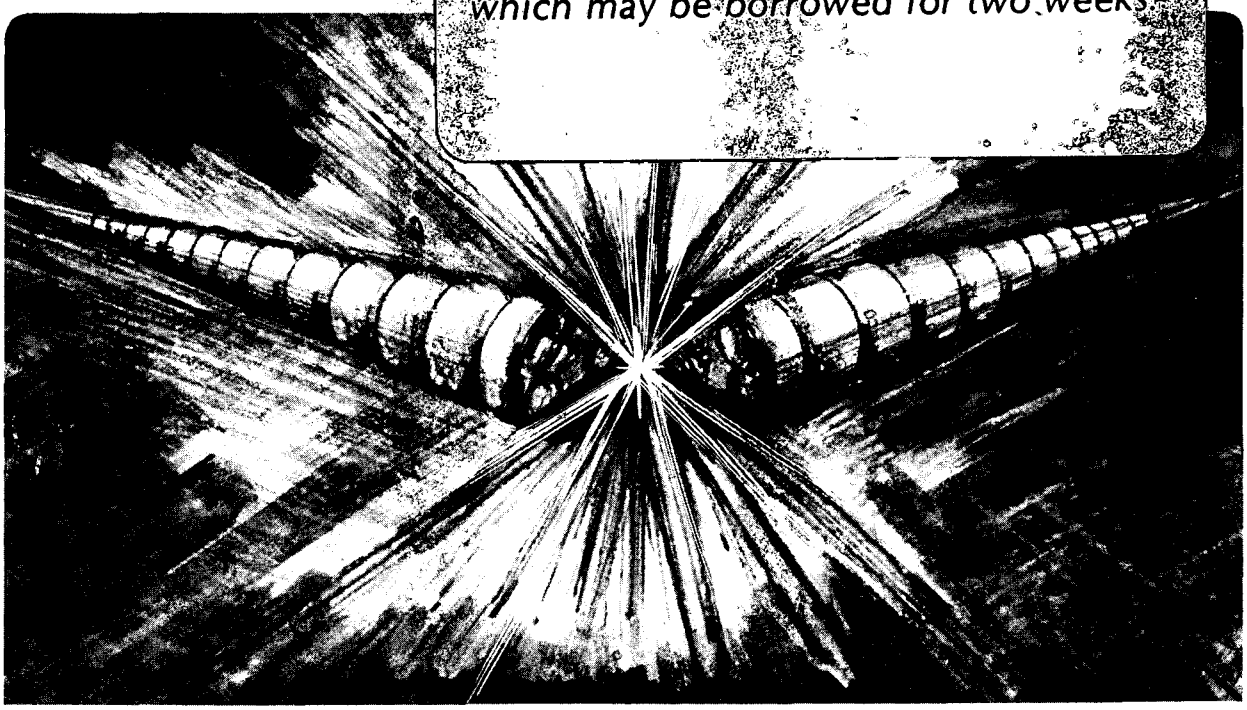

LBL-19033 c.2

Prepared for the U.S. Department of Energy under Contract DE-AC03-76SF00098

DISCLAIMER

This document was prepared as an account of work sponsored by the United States Government. While this document is believed to contain correct information, neither the United States Government nor any agency thereof, nor the Regents of the University of California, nor any of their employees, makes any warranty, express or implied, or assumes any legal responsibility for the accuracy, completeness, or usefulness of any information, apparatus, product, or process disclosed, or represents that its use would not infringe privately owned rights. Reference herein to any specific commercial product, process, or service by its trade name, trademark, manufacturer, or otherwise, does not necessarily constitute or imply its endorsement, recommendation, or favoring by the United States Government or any agency thereof, or the Regents of the University of California. The views and opinions of authors expressed herein do not necessarily state or reflect those of the United States Government or any agency thereof or the Regents of the University of California.

LBL-19033

HEAVY ION MEDICAL ACCELERATOR OPTIONS*

R. A. Gough and J. R. Alonso

Lawrence Berkeley Laboratory
University of California
Berkeley, CA 94720

Summary

This paper briefly explores the accelerator technology available for heavy ion medical accelerators in the mass range of 1 to 40 (protons through argon). Machines that are designed to produce the required intensities of a particular design ion, such as silicon (mass 28), can satisfy the intensity requirements for all lighter ions, and can produce beams with higher mass, such as argon, at somewhat reduced, but still useful intensity levels. They can also provide beams of radioactive ions, such as carbon-11 and neon-19, which are useful in diagnostic imaging and for directly verifiable treatments. These accelerators are all based on proven technology, and can be built at predictable costs. It is the conclusion of several design studies that they can be operated reliably in a hospital-based environment.

Background

There are presently at Berkeley a number of active programs in the application of energetic charged particles to research in biology and medicine. These programs, which include the development of appropriate accelerator technology and the operation of existing accelerators for clinical research, are the outgrowth of over 40 years of experience in these fields. While the present emphasis at Berkeley is focused on heavy ions ranging from mass 4 (helium) to mass 40 (argon), much of what has been learned concerning the design of these facilities is applicable to the design and operation of any charged-particle facility.

In 1977, a report was published summarizing the findings of a medical accelerator design study undertaken jointly by the Arizona Medical Center and the Lawrence Berkeley Laboratory[1]. This study surveyed the technical approaches for delivery of neutrons, pions, light, and heavy ions to a wide variety of medical applications, and provided an assessment of cost and performance on both an absolute and comparative basis. Because uniform costing practices were employed, these cost comparisons are extremely useful in the context of this workshop.

*Work supported by the Director, Office of Energy Research Office of High Energy and Nuclear Physics, Nuclear Science Division, U. S. Department of Energy, under Contract Number DE-AC03-76SF00098.

In 1984, another report was published summarizing a detailed LBL design study of a specific accelerator capable of providing a range of heavy ions from protons to argon[2]. The design ion in this case was silicon. The layout of a facility based on this design is shown in Figure 1. This study considered the construction of a complete, hospital-based facility that would support programs in community medicine together with research programs in clinical radiotherapy and in other biomedical applications of charged particle beams. It examined in detail the technical components required to meet specifications for a versatile, heavy ion accelerator. This machine can also provide useful intensities of radioactive beams (such as carbon-11 and neon-19), and can be rapidly switched between different ion species and energies to provide efficient service to as many as 8 separate treatment areas.

In considering the heavy ion option, it is important to realize that it is really many options. A machine capable of producing protons, helium and carbon, for example, offers some advantages over a proton-only machine and would cost less than a machine designed for heavier ions such as silicon and argon. It is also important to realize that the cost of the accelerator itself is a relatively small fraction of the total cost for a new and complete facility. This fraction becomes very small if the capital costs are amortized over the productive life of the facility, which could easily be upwards of 30 years.

Requirements

Many of the requirements for charged particle medical accelerators can be expressed indepedent of the choice of particle species. Energy and intensity, for example, are set by the need for a range in tissue of about 30 cm, and for a treatment time of about 1 minute per 100 rad fraction. Momentum spreads of a few parts per thousand, and emittances less than about 2 π cm-milliradians are required. All of these specifications pose little challenge to accelerator technology. Other requirements, however, such as patient safety, flexibility, simplicity of operation, and the achievement of ultra-high, clinical standards of reliability, including fast recovery from failures, are features that are absolutely essential for a successful medical program, but not normally found in accelerators designed for research in nuclear and high energy physics. These are areas that must not be overlooked in the design and construction of these machines. Many techniques that ensure component and system reliability are well known. One important principle is the use of proven and tested systems and components. In the construction of new accelerator systems that are pushing the technological frontiers, it is often necessary to obtain this field testing in R&D programs. In the case of medical accelerators, however, it is possible and desirable to avoid the cost and uncertainties of any R&D expenses, through the use of mature technology already tested in the field. Fortunately, all of the technology required to meet these specifications and reliability principles is available at synchrotron facilities now in operation. These machines can provide the energies, intensities, beam quality, flexibility and reliability needed for a successful medical program.

To summarize the basic technical requirements, we consider the specifications for a variety of synchrotron options, covering facilities where

the heaviest ion can range from protons (mass 1) to silicon (mass 28). Table 1 presents a summary of some of these basic specifications. A very simple approach provides a means to generate a crude, first order description of design parameters. The machines in Table 1 can, in general, accelerate all ions up to and including the heaviest design ion with adequate intensities, and can typically provide some even heavier ions with reduced but still useful intensities. The maximum energy, determined by the 30 cm range, plus some small safety margin, sets the magnetic rigidity ($B\rho$) of the beam which, in turn, determines the diameter of the synchrotron ring. The swing of the synchrotron RF system should not exceed 10:1, allowing us to set a minimum energy for injection. This minimum injection energy is satisfactory for all these examples, except in the case of the silicon machine, where stripping efficiency considerations dictate a somewhat higher choice of injection energy. The last column gives the minimum intensities required to ensure that even large volumes can be treated in a reasonable period of time. For typical, modern synchrotrons, approximately 10^7 - 10^8 ions/pulse can be extracted for each particle microamp available at injection. This transmission, together with the synchrotron repetition rate, determines the performance requirements of the injector system. For machines designed for carbon or heavier ions, a cycle rate of 2 to 4 Hz is readily achievable, while for lighter ion machines, the lower stored energy in the magnet system should permit higher rep rates to be achieved.

Table 1

Summary of basic synchrotron requirements for various choices of heaviest ion

Heaviest Ion	Maximum energy (MeV/n)	Rigidity (kG-m)	Minimum injection energy (MeV/n)	Extracted beam Intensity (Ions/sec)
protons	250	25	1.8	2×10^{10}
helium	250	50	1.8	4×10^{9}
carbon	450	68	2.5	8×10^{8}
neon	670	86	3.1	4×10^{8}
silicon	800	97	7-8 *	3×10^{8}

* For silicon, injection energy set by stripping efficiency.

Accelerator Technology

Synchrotron

Previous studies[1,2] of both carbon and silicon synchrotrons have been completed, providing detailed descriptions for possible designs of two of the heavy ion options. Two somewhat different approaches were taken in these designs: the carbon option utilized a combined-function lattice design, while the silicon machine used a separated-function lattice. Combined-fuction types have been preferred for small machines to minimize the number of elements and machine size, though they often demand stricter fabrication and positioning tolerances. For heavier ion machines, however, a greater repertoire of ions is possible and more demand for fast ion switching is anticipated. In the silicon lattice, therefore, the separated function approach was adopted to ensure ease of tuning. In this case the ring diameter was kept small by increasing the guide field from the 8 kG value used in the carbon lattice, to 16 kG. This, together with other differing goals of the two studies, makes direct comparisons and interpolations of the two designs more difficult, but serves to underscore that different approaches are often possible. Nevertheless, as we will see, costs scale very closely, despite these design differences. Parameter summaries for these two designs are given in Table 2.

Table 2

Summary of design parameters
for carbon and silicon synchrotrons

	415 MeV/n Carbon	800 MeV/n Silicon	
Maximum kinetic energy	415	800	MeV/n
Injection energy	2.9	8	MeV/n
Lattice type	comb. func.	sep. func.	
Mean radius	12	14.6	m
Repetition rate	2	2-4	Hz
Number of injected turns	4	1	
Dipoles			
Number of magnets	24	12	
Guide field	8	16	kG
Length	1.6-2.8	3.2	m
Quadrupoles			
Number of magnets	0	18	
Max. gradient	-	76.5	kG/m
Length	-	0.4	m

A layout of the silicon ring is given in Figure 2. The three superperiod symmetry is indicated by the dotted lines. The long straight sections are used for injection, extraction, RF, correcting elements and diagnostics. The 16 kG field requirement for the ring dipoles led to the development of a

conservative, curved dipole design, capable of reliable operation at 4 Hz and 16 kG. The dipole magnets used in this lattice are illustrated schematically in Figure 3. They are of laminated construction, and have a 30 degree bend angle, a 3.2 meter length, a 4 cm gap, and a 10 cm aperture. Each dipole requires 46 kW at full excitation.

The synchrotron is a pulsed machine. Typical waveforms, shown in Figure 4, are taken from the silicon design study. Two operating modes are described. In each mode, the rate of rise is 160 kG/second, a conservative limit for what can be readily achieved with conventional power supplies. This can be applied, as shown at the top, to provide a 2 Hz rep rate and a duty factor of 60%, or, as shown at the bottom, to provide a 4 Hz rep rate with a 20% duty factor. Long duty factors are desirable from the viewpoint of beam delivery systems, as discussed later. A slow, RF-off, resonant extraction can be provided during flattop, keeping instantaneous dose rates from exceeding comfortable levels, and at the same time maintaining a uniform beam level, suitable for dynamic methods of beam delivery. Energy variability is achieved by programming the flattop at the level appropriate to the desired beam energy. Only a few pulses are required to change and verify the magnet excitation level.

Injection into the synchrotron can be readily achieved with septum magnets and ferrite-loaded fast kickers. These magnets are inserted in one of the long straight sections provided in the lattice as shown in Figure 5. The magnets shown here have modest dimensions and electrical requirements, and can be used to inject beams with Q/A of 1/2 at energies up to 8 MeV/n. In the carbon machine, a four turn injection scheme was developed to provide a conservative margin on the intensities. In the silicon design, single-turn injection was adopted - again to simplify the tuning. The use of single-turn injection has the additional advantage of reducing the magnet apertures, leading to lower projected power consumption and operating costs, but requires a higher level of injector performance to assure the needed conservative margin of available intensities.

Vacuum requirements for heavy ion synchrotrons in this mass range are typically in the low 10^{-7} Torr range. Most of the losses occur at low energy, and therefore the pressure requirements show some dependence on the acceleration rate. The required pressures can be readily achieved with conventional vacuum technology.

Injector

The task of the injector system is to provide an adequate intensity of the appropriate ion during the injection window of the synchrotron. This window is typically a few microseconds wide and occurs a few times per second, defining a very short duty factor for the injector of $\leq$ 0.1%. The traditional choice for a synchrotron injector is a linac, and for the higher-mass heavy ion options, is the accelerator of choice. The PIG source/RFQ/Alvarez linac combination, particularly for low duty factor, heavy-ion applications, offers proven and reliable technology with flexibility to switch rapidly between ion species. For proton and helium options, because the injection energy is so low, consideration should be given to duoplasmatron sources and to van de Graaffs or the RFQ linac for preacceleration.

A schematic layout for an injector developed for the silicon design study is shown in Figure 6. Because of the low duty factor, PIG source lifetimes of several weeks are expected. Depleted sources can be rebuilt and returned to operation in about 2 hours. Switching between multiple sources can be used to rapidly change ion species. The RFQ proposed here is identical in design to one designed and successfully operated for use at the Bevatron in Berkeley. The low beam energy at the RFQ entrance of only 8.4 keV/n, places the source on a dc platform of 60 kV, simplifying source access and eliminating the need for a Cockcroft-Walton preaccelerator. This RFQ accepts beams with Q/A as low as 1/7 and accelerates them to 200 keV/n. Two Alvarez tanks, each followed by a stripper, continue the acceleration to 1.75 and 8 MeV/n respectively. Each Alvarez uses pulsed quadrupoles for focusing; tank 1 operates on the two $\beta\lambda$ mode, and tank 2 operates on the fundamental. A bunch rotator cavity is specified in this design to ensure efficient matching to the injection requirements of the synchrotron. A parameter summary for the linac is given in Table 3.

Table 3

Parameter summary for silicon injector linacs

	RFQ Linac	Prestripper Alvarez Linac	Poststripper Alvarez Linac	
Input energy	8.4	200	1750	keV/n
Output energy	200	1750	8000	keV/n
Q/A	0.143	0.143	0.357	
Frequency	200	200	200	MHz
Aperture radius	2.5	5, 8	10, 12.5	mm
Length	2.24	10.7	11.3	m
Tank inside diameter	150	950	950	mm
Peak RF power	150	1000	1200	kW
Duty factor	0.001	0.001	0.001	
Stored energy	0.6	45	53	Joules

For a facility where carbon is the heaviest ion, an injector could be designed along similar lines. In this case, however, the source ion could be $^{12}C^{+4}$, leading to a more efficient acceleration than in the silicon design. An RFQ designed for Q/A = 1/3 ions would accelerate the beam to substantially higher energies than in the silicon example, and a short Alvarez tank, perhaps less than 5 meters in length, would boost the energy up to the level required for injection. This injector could also readily provide lighter ions, such as protons and helium, and could switch quickly among any of the ions in its repertoire, permitting the synchrotron to deliver the optimal ion for a given diagnostics or treatment situation-including radioactive beams of ^{11}C.

Power requirements for these injectors are modest because of the low duty factor. Commercially available vacuum equipment can be used to readily meet the pressure requirements of 10^{-7} - 10^{-6} Torr.

Controls

For any medical accelerator, the control system should be capable of storing and recalling tunes for each given energy. It is desirable that this be done very rapidly - on a time scale commensurate with scanning the beam energy during the course of a patient treatment. In the case of heavy ion machines, these tunes need to also include those required for different ions. In addition, to achieve the ultimate in machine reliability and simplicity of operation, it is highly desirable to provide a control system with enough sophistication to ensure precise fault diagnosis, together with easily-understood and conveniently-displayed graphics for the operator. Modern computer architechture makes it possible to provide this at reasonable cost.

Treatment Delivery

Preparation and delivery of a treatment beam needs careful study and will not be discussed at length here. However, it is important to review some of the requirements, as they impact other aspects of facility design. For heavy ions, it is appropriate to consider both fixed horizontal and fixed vertical treatment ports. It is also important to ensure that the external beam is free of time structure that would hinder the development of dynamic beam scanning. Methods for shaping the dose to conform to three-dimensional treatment volumes exist at presently operating facilities, but this is an area where new developments and improvements should be anticipated. Lateral or transverse spreading of the beam can be achieved with scattering techniques or by magnetic deflection methods. Axial spreading of the Bragg peak can be accomplished using degraders or by adjusting the energy of the beam delivered by the accelerator. The beam quality, and the precision with which the dose can be matched to the treatment volume are better if the material placed in the beam is minimized. This is important for all charged particle therapy, and its importance increases with the consideration of heavier ions. This argues in favor of magnetic deflection techniques, requiring uniform, structure-free beams, and for fast energy switching capability in the accelerator and beam lines.

Shielding

Shielding specifications can be prepared from data gathered at various operating accelerators. At the Bevalac Radiotherapy Facility, shown in Figure 7, concrete shielding blocks of normal density are arranged to provide radiation protection and permit access into the treatment room via a maze. A backstop thickness of approximately 3 to 4 meters, and sidewalls and roofs about 2 meters thick are required for 670 MeV/n neon treatments. These dimensions can be reduced through the use of high density concrete, but at most sites it would be prohibitively expensive to make extensive use of it. Considerable cost savings can be realized by using poured-in-place concrete. This is completely practical, but requires a well thought out use plan for all of the space, since much of the facility floorplan would be literally "cast in concrete". The severest need for radiation shielding is in the treatment room areas. Little beam loss is anticipated along the beam lines,

and modest concrete walls should afford adequate radiation protection there. There is some energy dependence of the shield thickness on the beam energy but the overall difference in cost in the context of the total facility costs, is not that great. Further economies can be realized by careful arrangement of the facility on the site. By locating the treatment rooms slightly below grade, good advantage can be made of earth shielding.

Cost Analysis

Comparative cost analyses are difficult to make unless uniform costing practices are adopted, and unless there is a clear definition of scope. The results of the 1977 LBL/Arizona study shown in Figure 8, provide such a comparison of accelerator base costs. These can be escalated to present-day dollars (January 1985) by multiplying by 1.92. They include all the hardware costs for an installed, working accelerator, but do not include the cost of the building, the shielding, beam transport or engineering. A striking feature of this graph for heavy ion synchrotron facilities, is the relative insensitivity to the choice of final energy. Curve B shows the cost vs energy for a heavy ion synchrotron using a cyclotron injector. (The cyclotron could also be used for isotope production.) Using this curve, and making some extrapolations, one projects the cost of a 415 MeV/n carbon synchrotron to be about 2/3 the cost of an 800 MeV/n silicon machine. The 1984 LBL study of a specific accelerator design for silicon with a linac injector scheme and no isotope production option, cites a base cost for the accelerator, converting to 1985 dollars, of approximately 18 - 20 M$, in good agreement with the value obtained by extrapolating from Figure 8. This would suggest that the base cost for a carbon synchrotron with a linac injector would be in the area of 12 - 14 M$. Projected accelerator-only operating costs for the silicon machine, including personnel, power and miscellaneous supplies and expenses, is less than 1 M$/year for five shift per week operation (exclusive of any applicable institutional overheads). For lighter ion machines, personnel costs would be about the same, but some reduction in power and miscellaneous expenses would be expected.

Our studies of facility requirements for charged particle radiotherapy have shown that the base accelerator costs, even for the heaviest ion considered, are not the dominant component of the total facilities costs. (Even for the silicon machine, the accelerator accounted for less than 30% of the total costs.) Therefore the choice of ion species and accelerator technology should not be driven solely by the accelerator cost, but one must also consider the need to maximize the potential scientific return on the total investment.

Conclusions

The accelerator technology required to meet the needs for heavy ion radiotherapy is well developed. Accelerators for charged particle radiotherapy are presently in existence, and several designs for new facilities are available. Heavy ion machines can, in general, provide beams of all ions, from protons to uranium; preliminary designs for various medical accelerator options up to mass 40 (argon) have been completed. These studies have determined that these machines can be built at predictable costs, and made to operate reliably in a hospital-based environment.

References

1) Dedicated Medical Ion Accelerator Design Study, Final Report, (December 1977) LBL 7230.

2) The Heavy Ion Medical Accelerator, Final Design Summary, (June 1984) LBL PUB 5122.

List of Figures

Fig. 1 Layout of a radiotherapy facility based on the silicon design study.

Fig. 2 Layout of a synchrotron ring designed for 800 MeV/n silicon.

Fig. 3 Illustration of a ring dipole magnet from the silicon design study.

Fig. 4 Typical waveforms showing 2 and 4 Hz operation.

Fig. 5 Straight section of synchrotron ring showing injection magnets.

Fig. 6 Injector schematic.

Fig. 7 Layout of treatment room at the Bevalac Radiotherapy Facility.

Fig. 8 Cost and performance summary of circular accelerators.

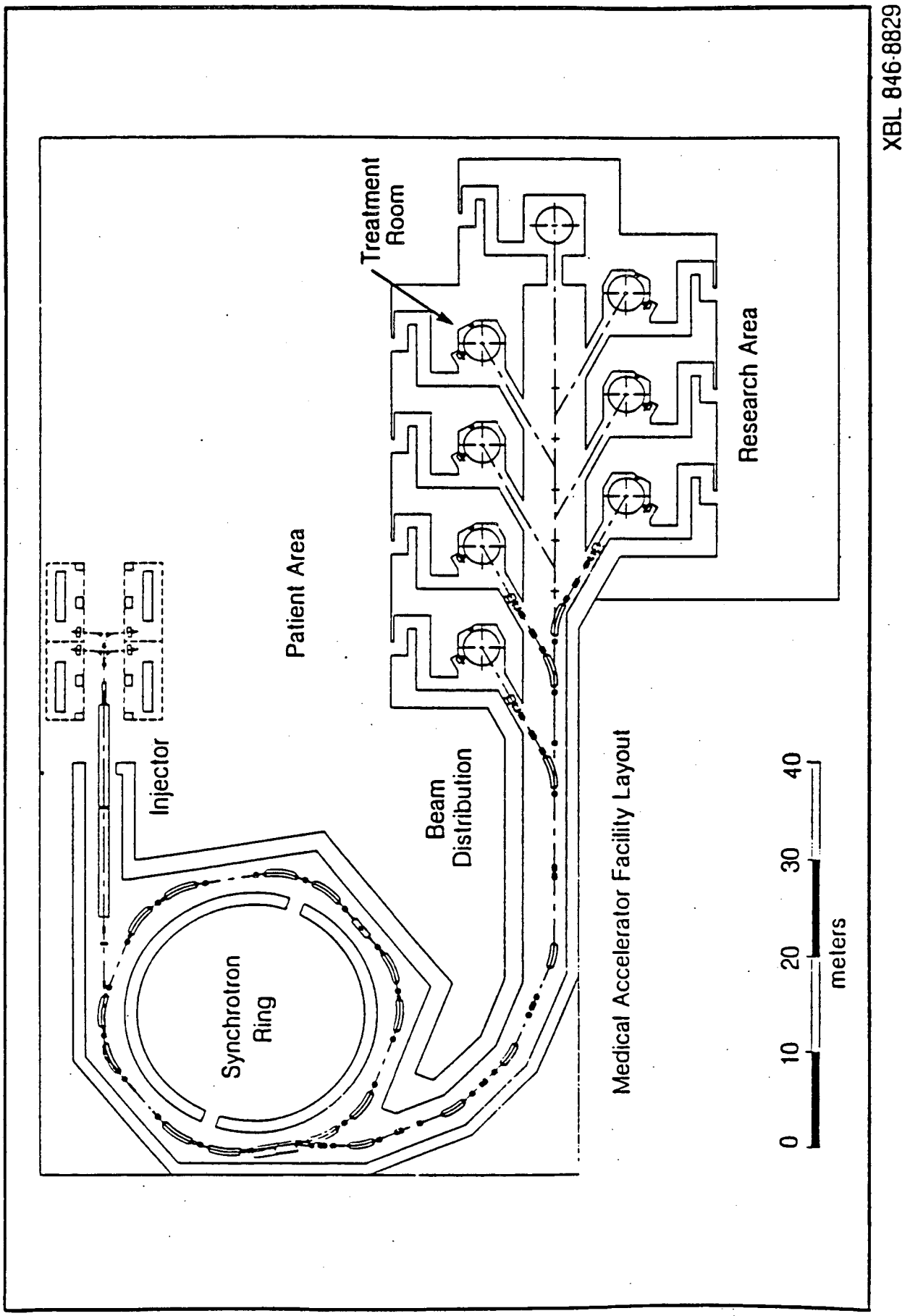

Fig. 1 Layout of a radiotherapy facility based on the silicon design study.

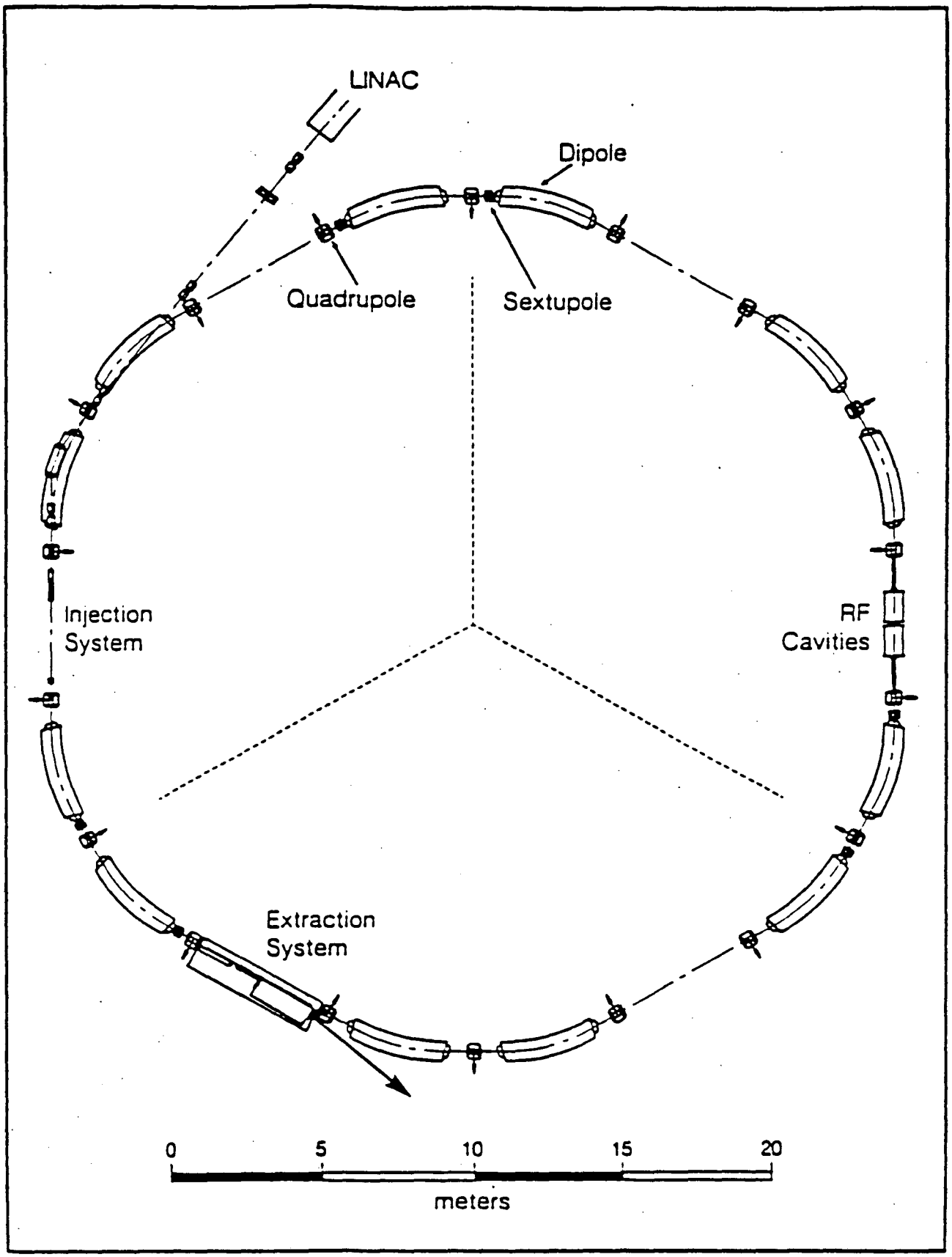

XBL 846-9008

Fig. 2 Layout of a synchrotron ring designed for 800 MeV/n silicon.

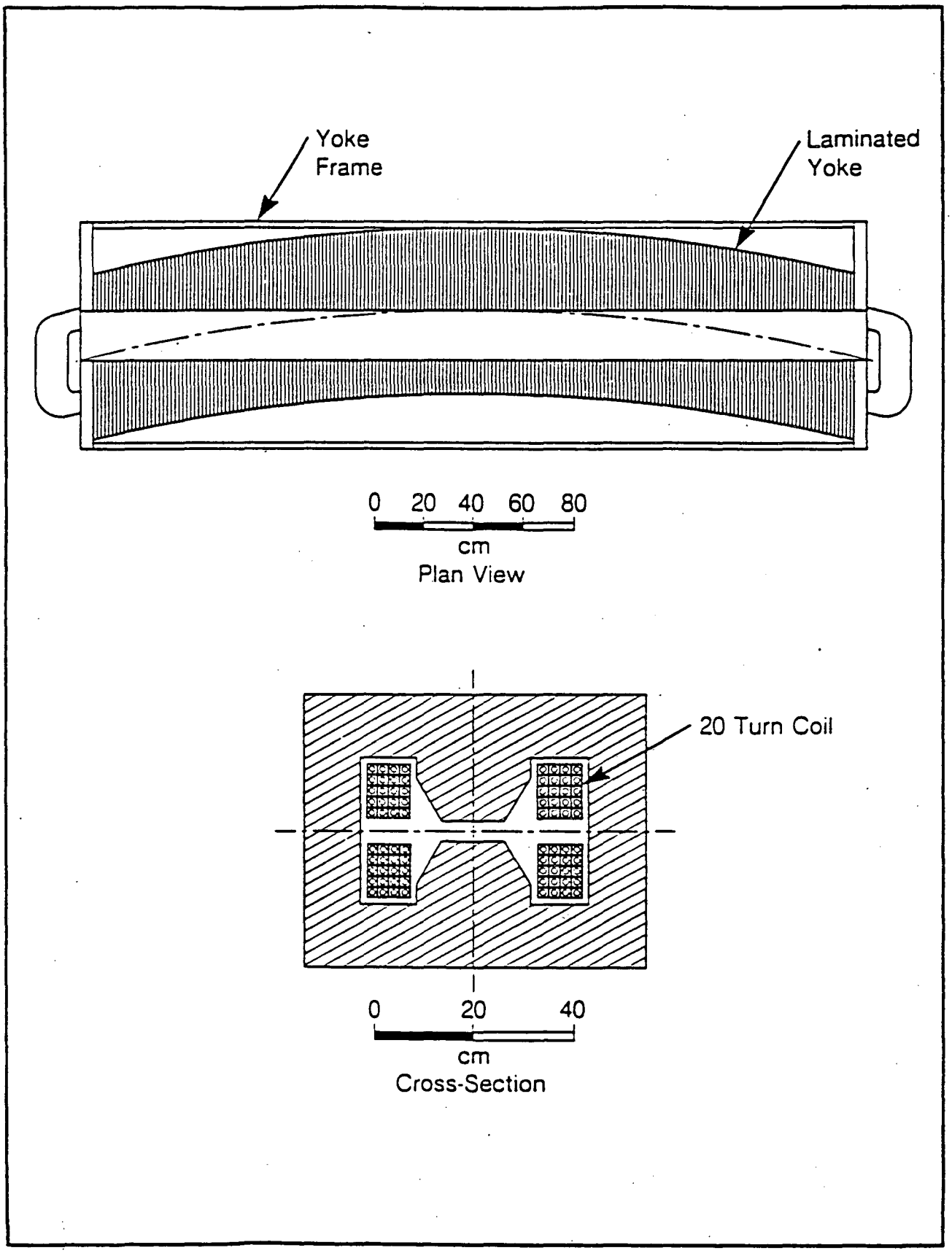

XBL 846-9006

Fig. 3 Illustration of a ring dipole magnet from the silicon design study.

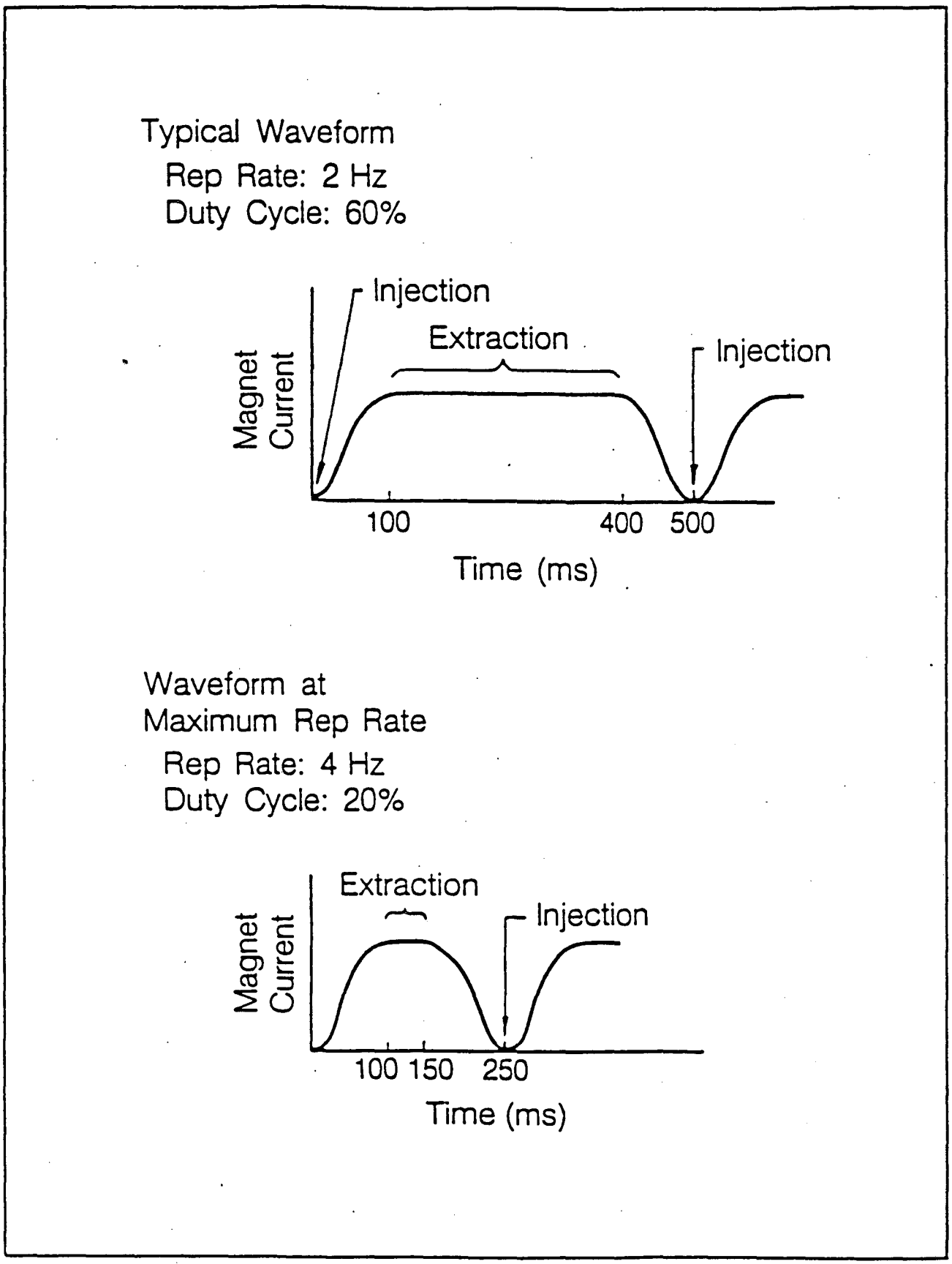

XBL 846-9049

Fig. 4 Typical waveforms showing 2 and 4 Hz operation.

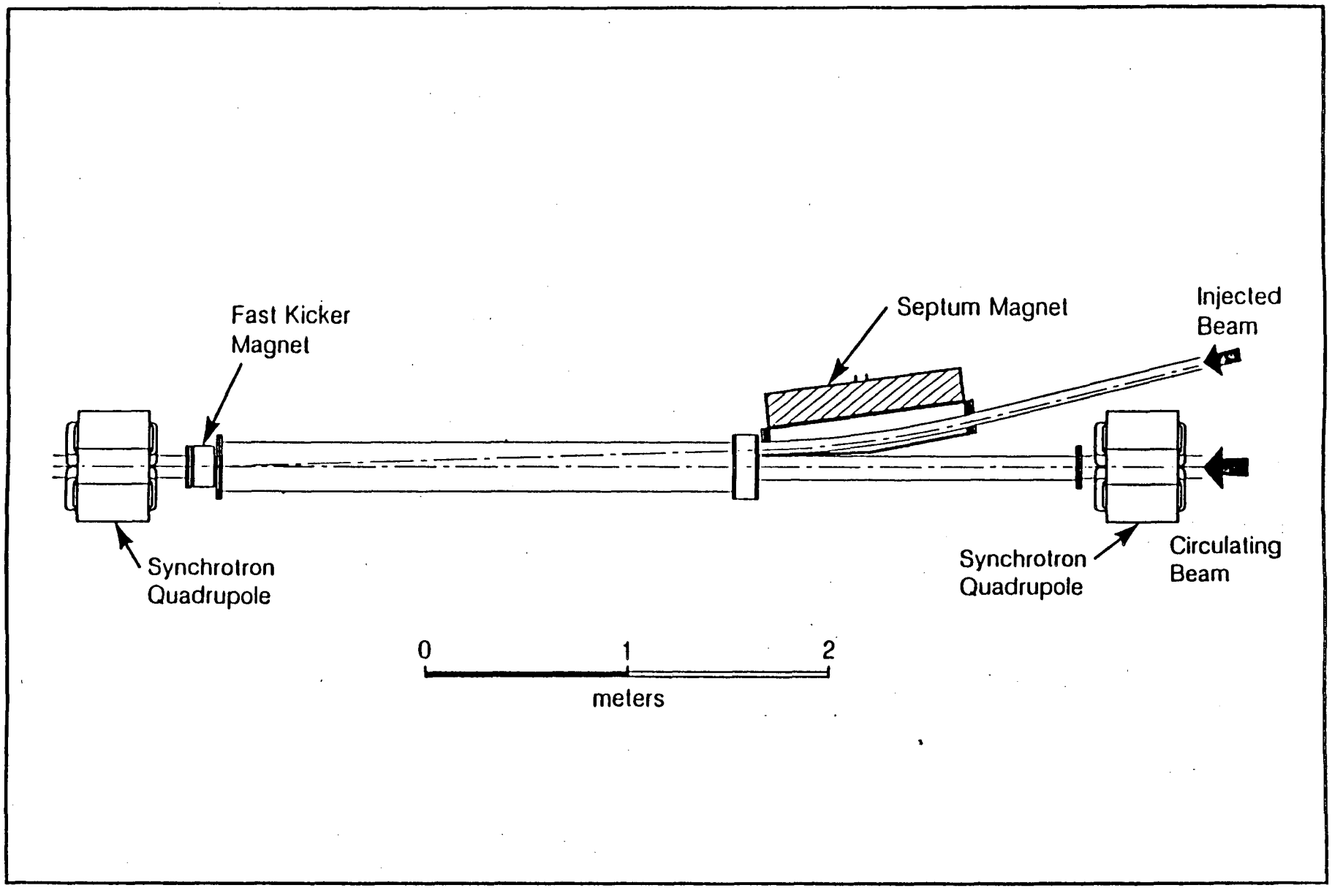

XBL 846-9005

Fig. 5 Straight section of synchrotron ring showing injection magnets.

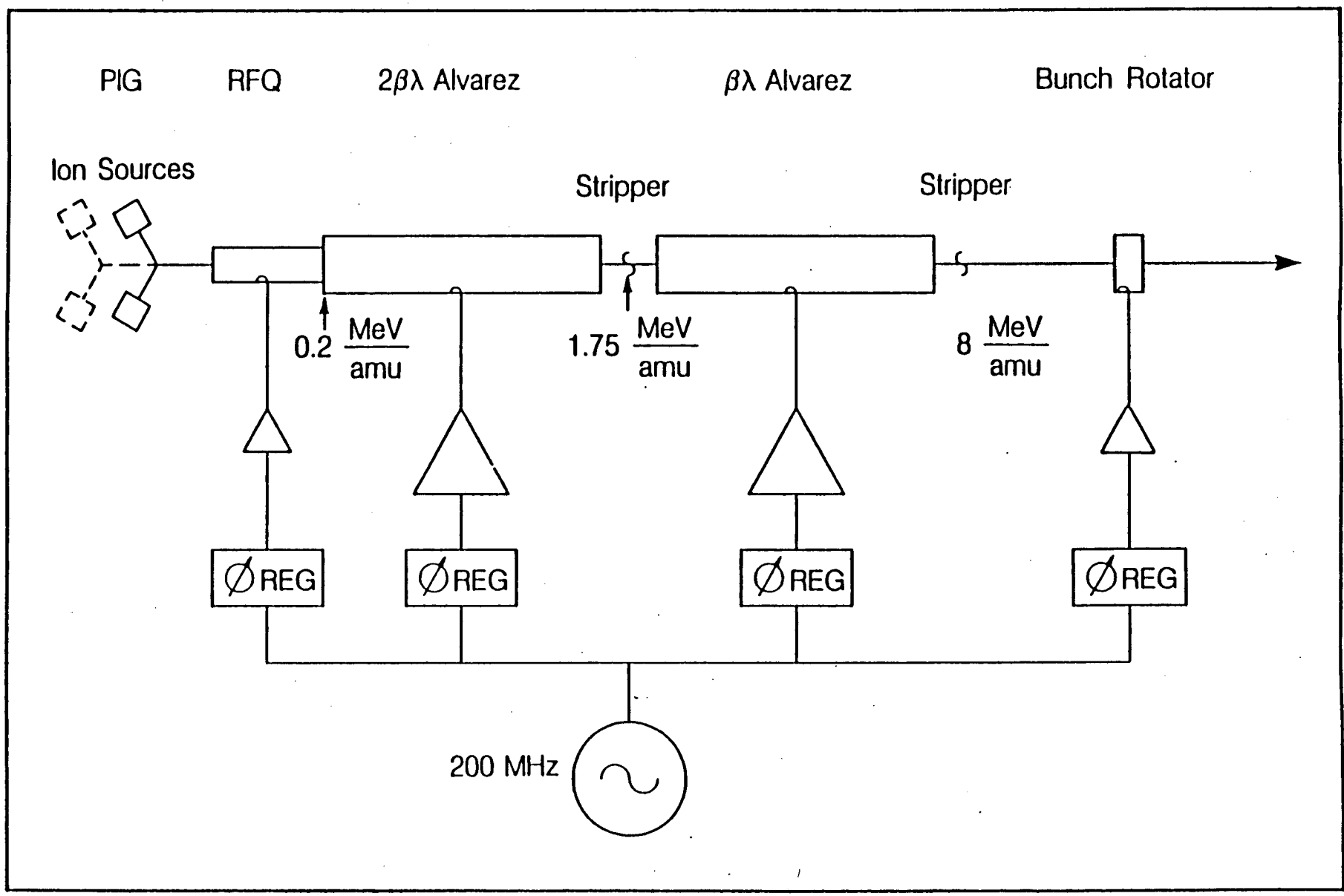

XBL 836-326A

Fig. 6 Injector schematic.

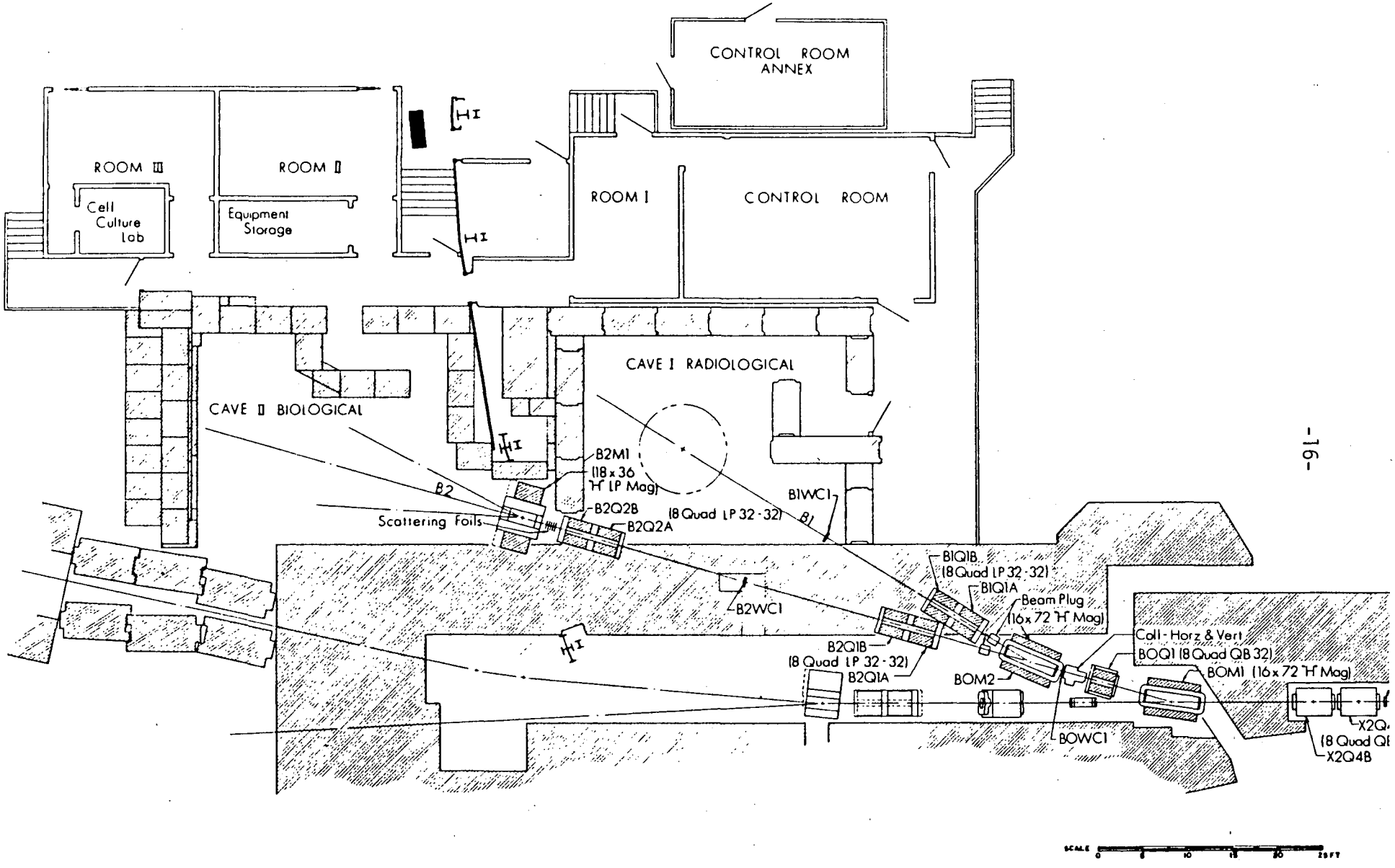

SEPT. 1976

BIOMEDICAL BEAM B1 & B2

Fig. 7 Layout of treatment room at the Bevalac Radiotherapy Facility.

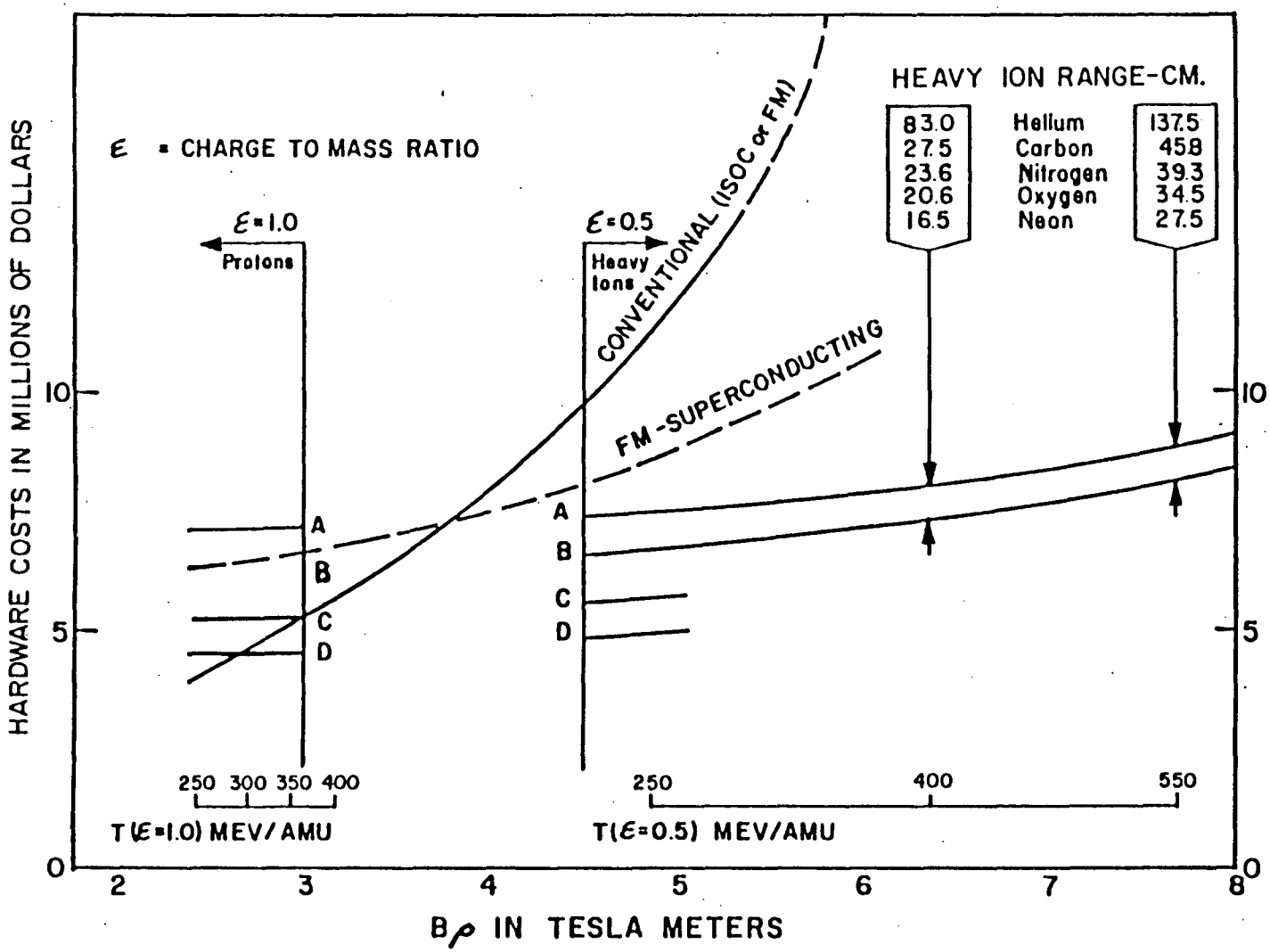

FIG. 22: Cost and performance summary of circular accelerators. Shown are base costs in FY 1977$ versus particle rigidity Bρ in Tm. Separate scales indicate the kinetic energies for ε=0.5 (heavy ions) and ε=1 (protons) corresponding to a given Bρ. The curves A,B,C & D show synchrotron costs vs. beam rigidity, with cost differences due to choice of injector.
A - heavy ion injector, neutron beam and isotope production capability
B - heavy ion injector, isotope production capability
C - p, α injector, isotope production capability
D - p, α injector only
Conventional cyclotrons are a good choice for protons, but prohibitively expensive for heavy ions. An FM-superconducting cyclotron is the cheapest heavy ion cyclotron.

Fig. 8 Cost and performance summary of circular accelerators.

This report was done with support from the Department of Energy. Any conclusions or opinions expressed in this report represent solely those of the author(s) and not necessarily those of The Regents of the University of California, the Lawrence Berkeley Laboratory or the Department of Energy.

Reference to a company or product name does not imply approval or recommendation of the product by the University of California or the U.S. Department of Energy to the exclusion of others that may be suitable.

TECHNICAL INFORMATION DEPARTMENT
LAWRENCE BERKELEY LABORATORY
UNIVERSITY OF CALIFORNIA
BERKELEY, CALIFORNIA 94720