LBL-19208
Preprint c.2

Lawrence Berkeley Laboratory
UNIVERSITY OF CALIFORNIA

Engineering Division

RECEIVED
LAWRENCE
BERKELEY LABORATORY

JAN 14 1986

LIBRARY AND
DOCUMENTS SECTION

To be submitted for publication

ULTRASONIC SYSTEM FOR IMAGING OF VAPOR BUBBLES
IN A LIQUID FILLED PIPE

B.T. Turko, W.F. Kolbe, and B. Leskovar

March 1985

TWO-WEEK LOAN COPY

This is a Library Circulating Copy
which may be borrowed for two weeks.

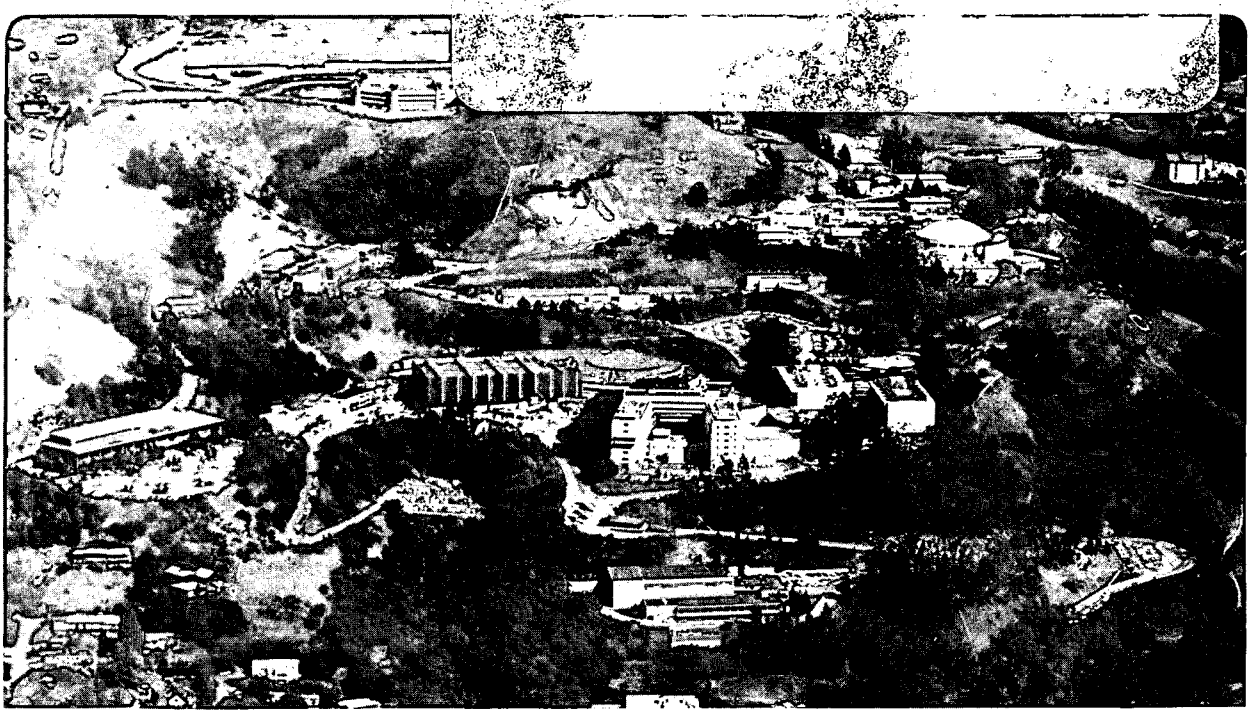

LBL-19208 c.2

Prepared for the U.S. Department of Energy under Contract DE-AC03-76SF00098

DISCLAIMER

This document was prepared as an account of work sponsored by the United States Government. While this document is believed to contain correct information, neither the United States Government nor any agency thereof, nor the Regents of the University of California, nor any of their employees, makes any warranty, express or implied, or assumes any legal responsibility for the accuracy, completeness, or usefulness of any information, apparatus, product, or process disclosed, or represents that its use would not infringe privately owned rights. Reference herein to any specific commercial product, process, or service by its trade name, trademark, manufacturer, or otherwise, does not necessarily constitute or imply its endorsement, recommendation, or favoring by the United States Government or any agency thereof, or the Regents of the University of California. The views and opinions of authors expressed herein do not necessarily state or reflect those of the United States Government or any agency thereof or the Regents of the University of California.

ULTRASONIC SYSTEM FOR IMAGING OF VAPOR BUBBLES IN A LIQUID FILLED PIPE

LBL-19208

B.T. Turko, W.F. Kolbe and B. Leskovar

Lawrence Berkeley Laboratory
University of California
Berkeley, California 94720 U.S.A.

ABSTRACT

An electronic system for acoustic imaging of vapor bubbles in a liquid filled steel pipe is described. An array of 20 acoustic transducers is attached around the pipe. They are fired one at a time by a programmable sequencer. The same transducers are in turn used as receivers of echoes reflected back from the bubbles. Analog and digital circuits and logic is described for fast processing of received signals. The majority of unwanted echoes are eliminated by a memorized "mask" frame, made with the water-filled pipe free from bubbles, enabling a high rate on-line data transfer to the computer. Unlike the earlier systems, this one makes possible the real time imaging of live bubbles.

INTRODUCTION

Ultrasound imaging has found its application in many areas, especially where opacity makes optical imaging impossible and intrusion into the observed space is not permitted. This paper describes a system for acoustical imaging of vapor bubbles within liquid filled metal pipes, such as those found in heat exchangers of nuclear reactors. Unlike other applications, the sound generated by a transducer has to not only travel through the wall of a steel pipe into the liquid but also back again as an echo reflected from the acoustically nonconductive bubble. Due to the mismatch of media along the acoustic path, strong signals from wall reverberations and other noise pulses are detected along with the wanted echoes. Electronic circuits were designed to generate proper sequences of transmitting sound pulses and for the detection and preprocessing of received echoes. The system is designed to only send the computer the digital data relevant for the reconstruction of an image. The rejection of unwanted data makes possible the on-line operation of the system and computer at rates of over 500 frames/s. This paper deals with the electronics of the system while a more detailed description of the imaging method and the software for reconstruction and display of acoustically detected bubble images is given in Ref. 1. Related literature on this subject can be found in Ref. 2-12.

A general overview of the system is shown in Fig. 1. A length of a steel pipe is used to contain the field to be imaged. The pipe is sealed at the bottom and filled with water. A pump supplies a continuous flow of air into the pipe, which breaks into bubbles of random sizes. The bubbles pass the array of 20 acoustic transducers, arranged in a circle around the pipe and coupled to the pipe. One transducer at a time is fired with an electric pulse, sending a sound wave into the pipe. After a short deadtime, the same transducer is turned into a receiver, detecting reflected sound. All remaining transducers are made inactive during a period of time, selected to be somewhat longer than the time needed for sound to travel fully across the pipe and back. The sequence of 20 such periods involving all 20 transducers, one at a time, is called a frame, analogous to video imaging. Each transducer period is thus one line of the frame.

Referring to Fig. 1, each transducer is controlled by an individual driver D and two linear gates, G1 and G2. G1 opens only when the transducer is fired and G2 opens for the time the transducer serves as the echo detector. The 20 transducers are divided in 2 groups of 10, each one served by a single independent analog signal processing channel, composed of an amplifier and a discriminator. The echo signals passing the gate G2 are OR-ed at the input of the wide band echo amplifier. Since the gates are opened serially, only one transducer at a time has access to the amplifier.

Each amplifier consists of a preamplifier A1, a limiter L and an output stage A2. The purpose of the limiter is to reduce the gain of the first stage, when overloaded, preventing saturation by excessive input signals. The time for recovery from overloads is substantially decreased by the limiter. The amplifier output stage drives two differential discriminators, DL and DT, and provides the signal for a monitoring oscilloscope. The discriminators are sensitive only to the fast transitions of echo signals superimposed onto slowly varying baseline. The discriminator output is a pulse marking accurately the echo arrival time. The output time walk of the differential discriminators is very small even for large amplitude variations of the received echoes. One discriminator is made sensitive to positive transition of echo waveform DL, and the other to negative transitions DT.

The time of arrival of each discriminated echo is digitized by an accurate clock oscillator in an echo processing logic module. The same clock drives the sequencer and a transducer control circuit which is responsible for the proper timing of each transducer (being alternately used as the transmitter and echo receiver). The processing logic also includes a "mask" frame memory in which a reference frame is stored. Since the majority of detected echoes are artifacts and not the reflections from real bubbles, they can be identified by the reference frame and deleted to avoid supplying the computer with irrelevant data. Each detected echo is compared to the mask frame containing the unwanted artifacts. The echo matching a corresponding artifact is deleted. Those not found in the mask are most likely reflected from a bubble and are passed on to the computer. Due to this data reduction, on-line operation at rates of 500 frames/s is possible.

The system's two modules conform to the convenient CAMAC Standards. A CAMAC crate provides the power and the link to a PDP 11/34 computer via an interface controller. The computer peripherals include a terminal and a graphic display unit.

ANALOG PROCESSING OF ECHO SIGNALS

An oscilloscope picture of a typical frame with 20 lines is shown in Fig. 2. The lines are shifted due to the baseline offset of individual transducers (upper trace). Strong reverberations in the pipe wall cause many spurious echoes at the beginning of each line. These signals are, along with those reflected from the bubbles, selected as possible events by the discriminators (bottom trace). One expanded line of

the frame, containing a typical echo, is shown in Fig. 3 at two different transmitter excitation levels. At high levels of excitation, a strong echo is followed by strong reverberations. Two of the negative transitions following the echo were strong enough to trip the discriminator. At lower excitation, only the echo was discriminated. In both cases, the discriminator fired at the same time point on the negative slope of the echo, regardless of the amplitude.

The differential discriminators are essentially amplifiers which respond to the current, produced by the signal charging a capacitance through a resistor (DL, R and C in Fig. 1).

The first portion of the echo can be approximated by a triangle, which is simulated in a different time scale by a shaped pulse generator output v(t) (Fig. 4). The voltage v_c, across a capacitor C, charged through a resistor R, by the linearly increasing voltage v(t), is

$$v_c + RCdv_c/dt = v(t). \qquad (1)$$

For the rising edge of the triangular input pulse $v(t) = V_1 t/t_1$. At the time, t_1, the capacitor voltage has reached

$$v_c(t_1) = RCV_1[t_1/RC + \exp(-t_1/RC)-1]/t_1 \qquad (2)$$

where it is assumed that the initial capacitor charge is zero. After t_1 the input voltage changes linearly from V_1 to V_2 and $v(t) = V_1+(V_2-V_1)t/t_2$. The amplifier output is proportional to the difference $v_R = v(t)-v_c(t)$, found by solving (1) and substituting (2) for initial conditions at $t = t_1$. In the time period $t_1 \leq t \leq t_2$ we have

$$v_R(t) = RC(V_1-V_2)[-1+\exp(-t/RC)]/t_2 + RCV_1[1-\exp(-t_1/RC)]\exp(-t/RC)/t_1. \qquad (3)$$

The solution of (3) for RC=2μs, $t_1=t_2=10$μs and V_1=5V, V_2=0 is shown in Fig. 4. The discriminator fires at the time t_0 when the waveform $v_R(t)$ crosses zero

$$t_0 = RC \ln \frac{1+[1-\exp(-t_1/RC)]t_2/t_1-V_2/V_1}{1-V_2/V_1}. \qquad (4)$$

For the waveform in the Fig. 4a, $V_2 = 0$ and $t_1 = t_2$. If the time constant RC is small in comparison to t_1, the crossover point is t_0=RCln2. No observable drift of the crossover point was noticed when the input voltage was reduced by 40 dbm (Fig. 4b) and then again by 40 dbm (Fig. 4c).

Comparable results were obtained with real echoes in Fig. 3. The discriminator was biased so that only sharp negative transitions at crossover points are shown. Due to a high gain, the signal is clipped by running the discriminator to saturation. The negative transition of the output pulse walks little as a function of echo amplitude, allowing for a very accurate measurement of the echo travel time.

DIGITAL PROCESSING OF ECHO TRANSIT TIMES

Noise, picked up by the transducers, can be interpreted as an echo if the discriminator threshold is set too low. Also, a strong ringing echo can be interpreted as a burst rather than a single event (Fig. 3). In the previous work[13], all such signals were digitized and transferred to the computer, where digital filtering took place, separating true events from artifacts. Data transfer and processing was slow, allowing the reconstruction of only one frame at a time. The new system filters the events while they are being digitized, passing only those that are not rejected by the "mask" frame memory. Only a small fraction of the echoes (ideally one/line) should pass the mask filtering. Frame after frame can be fired in close sequence allowing for real time recording of air bubble flow through the water. A built-in derandomizing 64-word memory is used to buffer the processed events so that the PDP-11/34 computer can read them continuously.

The digital module consists of two major sections, a sequencer and an echo processing logic unit. Both are compatible with CAMAC standards. A block diagram of the sequencer and its basic timing diagram are shown in Figs. 5 and 6.

Upon the receipt of an external pulse or a manual start signal, the sequencer generates a single 20 line frame. The desired frame rate can thus be easily controlled. The time scale is defined by an externally provided reference frequency source. Two internal clocks, shifted in phase, are generated by dividing this reference frequency by a factor of four.

At the onset the frame start pulse is differentiated. The leading edge of this pulse generates a general clear signal (R_2C_2 and G5 in Fig. 5, line a in Fig. 6) which in turn initializes the circuits for the start of the new frame. The start pulse also overrules any sequence in progress, except it won't clear the buffer memory. The same general reset is done via CAMAC with an F(9)A(0) command through gates G3-G5.

The differentiated trailing edge of the start pulse (R_1C_2, line b) sets the start latch SL (line c), which in turn starts the clocks by enabling the frequency divider FD (line d). SL also loads a line counter LC, presetting the number of desired lines per frame (20 in this case). The "on" status of SL, at the time the clear was generated, causes a line/pause toggle latch LP to assume a set state at the beginning of the new frame (line e). The toggling of LP controls the alternating operation of the pause and line counters, PC and LC. The first line of the frame is started by counting a preset number of clock pulses in PC (line e, pause #0). During this pause a pulse is generated by the transducer pulse width timer which pulse is routed by the transducer decoder TD to the transducer #0.

The pause ends when the preset counts (line g) in PC are counted (PC DONE). At this point LP toggles, starting the time counter TC (line h) and enabling the gate decoder GD, to open the linear gate of the transducer #0, passing its echoes to the amplifier. The range of TC is 256 clock counts. Exactly 256 early and late clock pulses are generated for the duration of each line, which are used for the digitizing of the echoes in the processing section of the digital module (Fig. 7).

The LP toggling that started the time counting in TC also advances the line counter LC, which in turn changes the transducer address in TD and GD from #0 to #1. When the 256-clock time counting is over, LP is set again (TC DONE) and the pause counter is enabled for starting the pause #1 (line e). The pause counting may be delayed if a pause extension delay is used. This optional extension interval is generated by the pause timer PT after the end of each line. The timer stops the frequency divider (line d) for the desired

length of time, stretching the total length of each line of the frame. Since the echoes are processed only when TD is counting, any desired portion of the line can be digitized maintaining full resolution.

After the sequence of the last line has been completed, an end of frame signal (LC DONE) is generated, which stops the clock. The sequencer remains in this state until a new frame is started externally.

The echo processing logic section of the digital module is shown in Fig. 7 and the corresponding timing diagram in Fig. 8. Essential to the fast, on line processing of echoes is a 20 X 256 bit mask frame memory. Any selected frame can be stored in the memory. Also, the frame data can be modified and read out afterwards by appropriate CAMAC commands from the computer. The data stored in this memory is treated as a mask frame, to which detected echoes are first compared. Each time the sequencer runs through a new frame, the mask memory is synchronously advanced so that the mask frame readout matches each frame line by line. For any of 256 counts (or pixels) of each line, one of the 256 corresponding bits of the mask frame memory line is also read out. The memory address (A_0-A_9, B_0-B_4 in Fig. 7) is changed simultaneously by the time and line counters in the sequencer as they progress in stepping through each frame (Fig. 5). Each echo, passed on by the discriminator, is assigned the address of the next pixel in the line. The same address of the corresponding line of the mask frame memory is read out simultaneously and compared to the assigned echo address. If there is an "echo" assigned to this pixel in the mask memory, the incoming echo is discarded and never reaches the computer. Only those echoes finding no data in the corresponding memory word are recognized as "wanted" and will be passed on to the computer for processing.

The typical procedure in the imaging process is to first store a frame in the mask memory, a "picture" of the pipe cross section filled with water free of air bubbles. Such a frame contains many artifacts, i.e., echoes from the opposite wall of the pipe, etc., and transmitter and amplifier noise detected and interpreted by discriminators as echoes. Most of these artifacts (except for noise) appear at the same place in all frames, including those with the air bubbles. If all subsequent frames are compared to the reference mask frame in the manner described above, most of the artifacts are discarded, since they coincide with those in the mask frame. Only "wanted" echoes, those new ones obtained by the reflection of acoustical waves from the air bubble in the pipe will not have counterparts in the mask memory and will be digitized and passed to the computer. Great reduction of unwanted data is thus achieved without losing any time at all for processing.

Examined further, the procedure starts by storing an event from the discriminator in the echo latch EL (Fig. 7 and 8). Since the arrival of this event is random, it must wait in EL until the arrival of the next line pixel (EARLY CLOCK), when another latch is set (SYNC. LATCH). The next late clock pulse passes G6 and clears EL, getting it ready for a new event.

If the event described above belongs to the frame selected to be written as a reference frame into the mask frame memory, the computer is instructed to generate a CAMAC command setting a write latch. Each event temporarily memorized by the sync. latch SL will pass gates G19 and G14 and get stored in the appropriate line and pixel of the new mask frame. At the end of the frame WR latch is reset closing the gate G19. All the events of the subsequent frames are from now on compared with the new mask.

Each event is held in the sync. latch for the duration of one full early clock pulse (Fig. 8) and then transmitted to the input of the temporary first buffer memory FB. This event's line address (A0-A7) and the mask memory status (OR's data from G16) are also presented to FB. The leading edge of the next late clock strobes the FB. A gate (G20) checks the echo and mask bit output. If there is no mask data, G20 passes the event when strobed by the delayed late clock pulse. The line G20 in Fig. 8 shows the first two events passing the gate since no data from the mask RAM were present at that time. The first two events that passed the mask from test (line G20) have to pass a deadtime test next. The dead time counter DC is reloaded to a preset count each time G20 passes an event. The magnitude of the deadtime is proportional to a number stored in the deadtime latch DL via a CAMAC command from the computer. The first of the events (line G20) starts the DC counting. The start of this counting (line DC DONE) loads the event's line address (B0-B4) and the pixel time (A0-A7) into the second buffer memory SB.

For example, the dead time counter was preset to 3 clock counts in Fig. 8. The new event came before the preset number was up, reloading DC with a new round of 3 counts. The address of the second event is lost, since the previous event's address is still stored in SB. As long as new events arrive within the deadtime, they are discarded. However, their number is counted by the rejected echo counter RC.

If CD finishes the preset number before the next echo is detected (line DC DONE), the event is considered complete, and the shift-in latch SL is set through G25. The output of SL in turn initiates the transfer of the data (that characterize the first event) into a 64 word FIFO (First-In-First-Out) register. The FIFO clears SL and RC via the reset latch RC after the data is accepted and the transfer completed.

The data automatically shift to the FIFO output, sending a Data Ready interrupt through G23 to the computer. In response, the event is accepted by the computer and the event cleared afterwards by an appropriate CAMAC command. Subsequent events, waiting in the FIFO, are shifted and transferred immediately one after another. As long as there is an event ready for readout, the computer gets the interrupt and Q-response signals, thereby maximizing the transfer rate.

Each event is characterized by a 16 bit word, of which 5 bits define the line (0 to 19), 8 bits the line address (0-255) and 2 bits the count of the rejected echoes. The last bit is reserved for the tagging of the end of each frame, in order to help the computer in separating the frames.

An option in frame processing is possible. The write latch WR (Fig. 7) can be permanently set by the switch PS, which in turn keeps the gate G19 enabled all the time. Each subsequent frame will be thus stored as a new mask in the RAM. At the same time, the preceding one is read out of the RAM and compared by the events of the current frame. If the old and the new frame are identical, no event can pass the gate G20 and no event is recorded by the computer. Only if an event in the new frame has shifted or some new event has appeared, will it pass the mask and be recorded in the computer. This "differential" method can be useful in the study of the velocity distributions of air bubbles in the water flow within the

steel pipe. Fig. 7 also shows all the CAMAC functions and codes used in the communication with the computer.

The processing of the data, which is generated at rates of up to 500 frames/s, and its display and recording is explained in Ref. 1.

CONCLUSIONS

In the present system the 20 transducers in the array are pulsed in series, thus the pipe diameter and the velocity of sound in the water limit the minimum frame time to 1.5 ms. The maximum frame rate cannot therefore exceed the 650 frame/s irrespective of the processing time. In order to achieve greater resolution, the number of transducers in the imaging array must be increased. The development of new circuits will be necessary to reduce frame readout and processing time. The transducers can be arranged in arrays, mounted in parallel rings around the pipe. Independent groups of transducers would work in parallel but the individual transducers in each group would be pulsed one at a time.

This "parallel-serial" mode of frame readout would need an individual amplifier/driver for each group of transducers. Automatic amplifier gain control would be needed to normalize the response of the individual transducers. It would also be very desirable to analyze each amplifier output waveform by several discriminators, sensing both positive and negative echo transitions and their rate of change. Appropriate timing circuits can separate the echoes from noise and pass them to the digital processing unit appropriately expanded to accomodate the increased resolution.

ACKNOWLEDGMENT

This work was performed as part of the program of the Electronics Research and Development Group of the Department of Instrument Science and Engineering, Lawrence Berkeley Laboratory and supported by the U.S. Department of Energy under Contract No. DE-AC03-76SF00098. Reference to a company or product name does not imply approval or recommendation of the product by the University of California or the U. S. Department of Energy to the exclusion of others that may be suitable.

REFERENCES

1. W.F. Kolbe, B.T. Turko and B. Leskovar, Fast Ultrasonic Imaging in a Liquid Filled Pipe, Lawrence Berkeley Laboratory Report LBL-19207 (1985).
2. G.F. Brockett and R.T. Johnson, Single-Phase and Two-Phase Flow Measurement Techniques for Reactor Safety Studies, Topical Report prepared for the Electric Power Research Institute, Research Project 694-1, NP-195 (1976).
3. G.F. Hewitt, Measurement of Two-Phase Flow Parameters, Academic Press (1978).
4. B. Leskovar, B.T. Turko, W.F. Kolbe and R.K. Sun, Development of Electro-Optical Instrumentation for Annular Two-Phase Flow Studies, Electric Power Research Institute Topical Report, Research Project 1379-01, EPRI Report NP-1831, (1981).
5. B. Leskovar, R.K. Sun, W.F. Kolbe and B.T. Turko, Measurement of the Thickness of Liquid Film by Means of the Capacitance Method, Electric Power Research Institute, Research Project RP-1379-1, Report NP-1212, (1979).
6. B.T. Turko, W.F. Kolbe, B. Leskovar and R.K. Sun, Development of Electro-Optical Instrumentation for Reactor Safety Studies, IEEE Trans. Nucl. Sci., NS-28, No. 1, 728-739 (1981).
7. R.K. Sun, W.F. Kolbe, B. Leskovar and B.T. Turko, Measurement of Thickness of Thin Water Film in Two-Phase Flow by Capacitance Method, IEEE Trans. Nucl. Sci., NS-29, No. 1, 688-694 (1982).
8. L.C. Lynnworth, F.P. Papadakis, D.R. Patch, K.A. Fowler and R.L. Shepard, Nuclear Reactor Applications of New Ultrasonic Transducers, IEEE Trans. Nucl. Sci., NS-18, 351-362 (1971).
9. W.F. Kolbe, B.T. Turko and B. Leskovar, Acoustic Imaging in a Water-Filled Metallic Pipe, IEEE Trans. Nucl. Sci., NS-32, No. 1, 1016-1024 (1985).
10. Proceedings of the IEEE, Special Issue on Acoustic Imaging, 67, No. 4 (1979).
11. P.N.T. Wells, Editor, Ultrasonics in Clinical Diagnostics, Longman Group, Ltd. (1977).
12. R.A. Lemons and C.F. Quate, Acoustic Microscopy, in Physical Acoustics, Principles and Methods, 14, 1-92, W.P. Mason, Ed., Academic Press (1979).
13. W.F. Kolbe, B.T. Turko and B. Leskovar, Acoustic Imaging of Vapor Bubbles through Optically Non-Transparent Media, IEEE Trans. Nucl. Sci., NS-31, No. 1, 726-732 (1984).

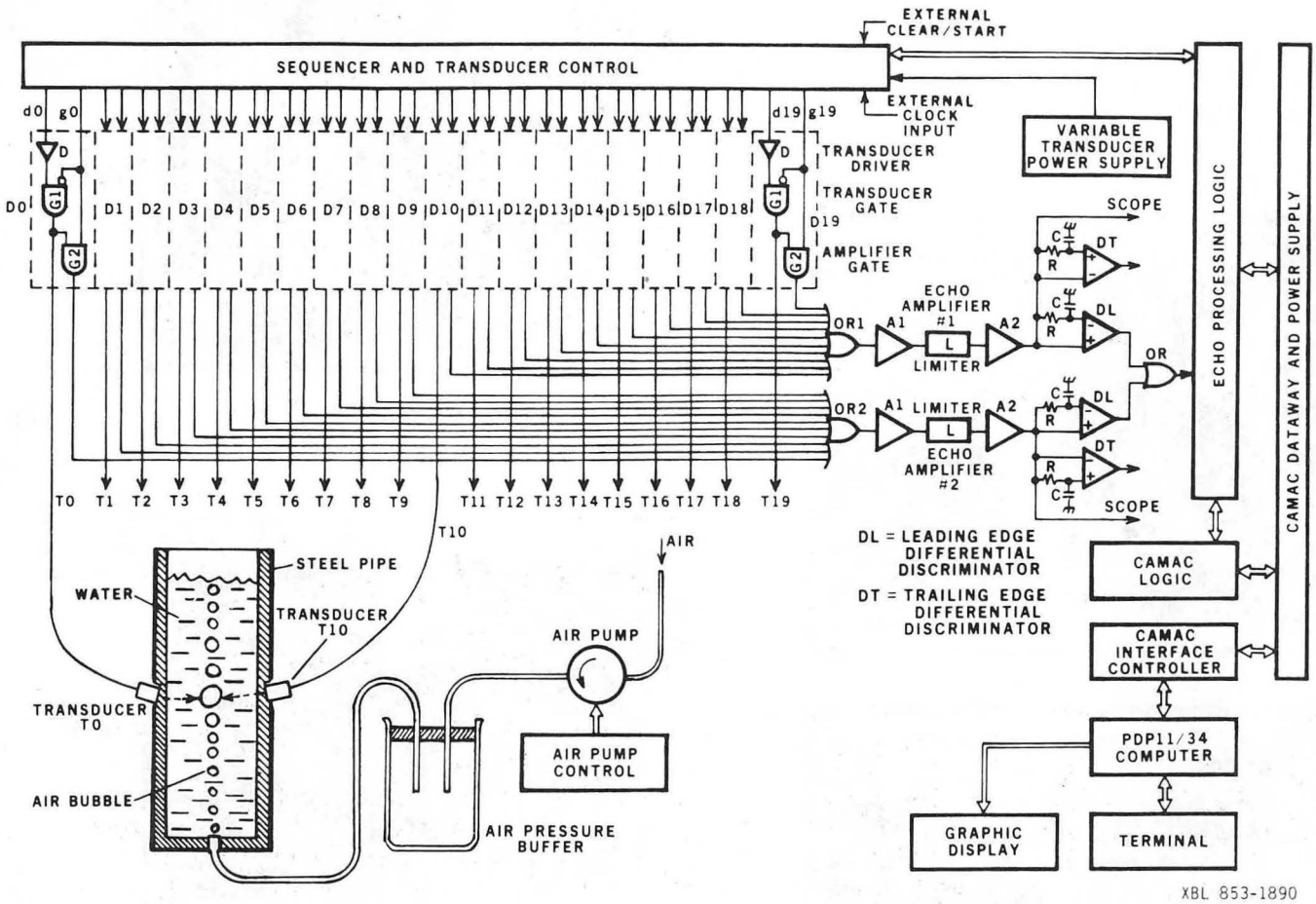

Fig. 1 General block diagram of ultrasonic system for imaging of vapor bubbles in a liquid filled pipe.

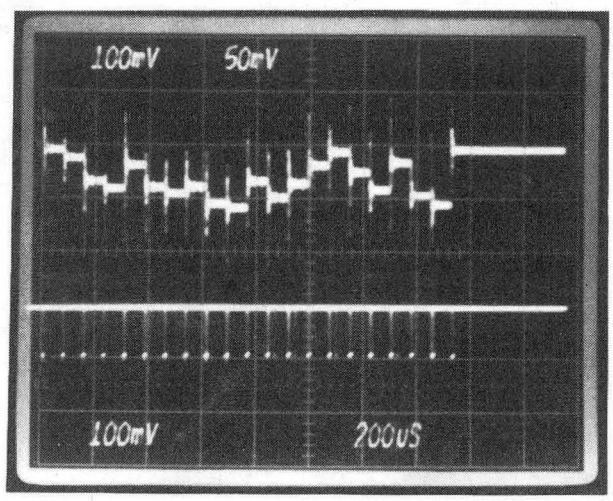

XBB 8310-8822

Fig. 2 Echo and discriminator output signals for entire 20 line sequence of a frame.

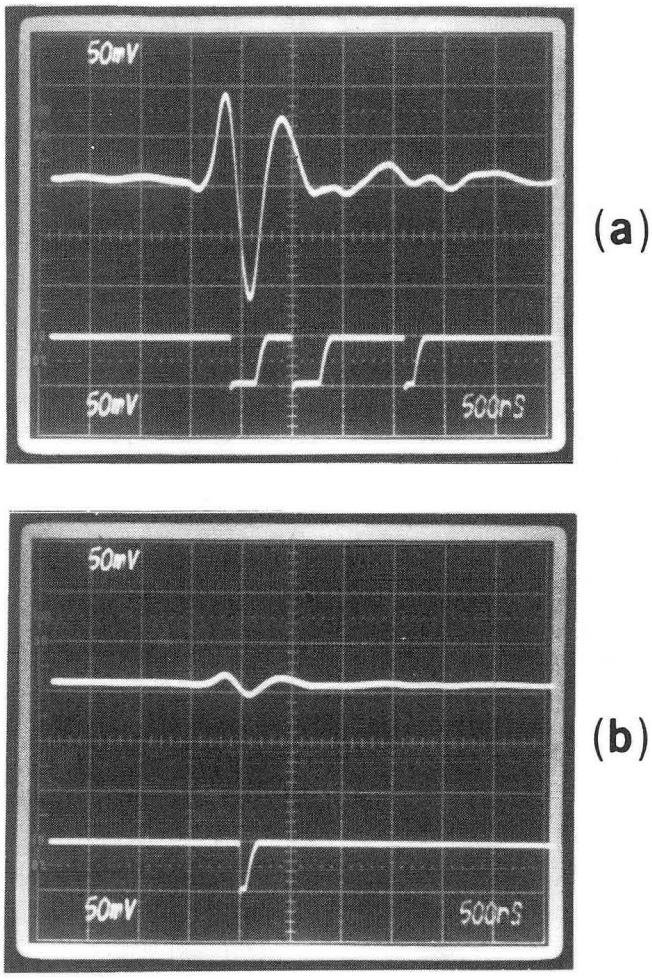

XBB 853-2493

Fig. 3 A typical echo signal and discriminator output at two excitation levels (a, 42 V and b, 4 V).

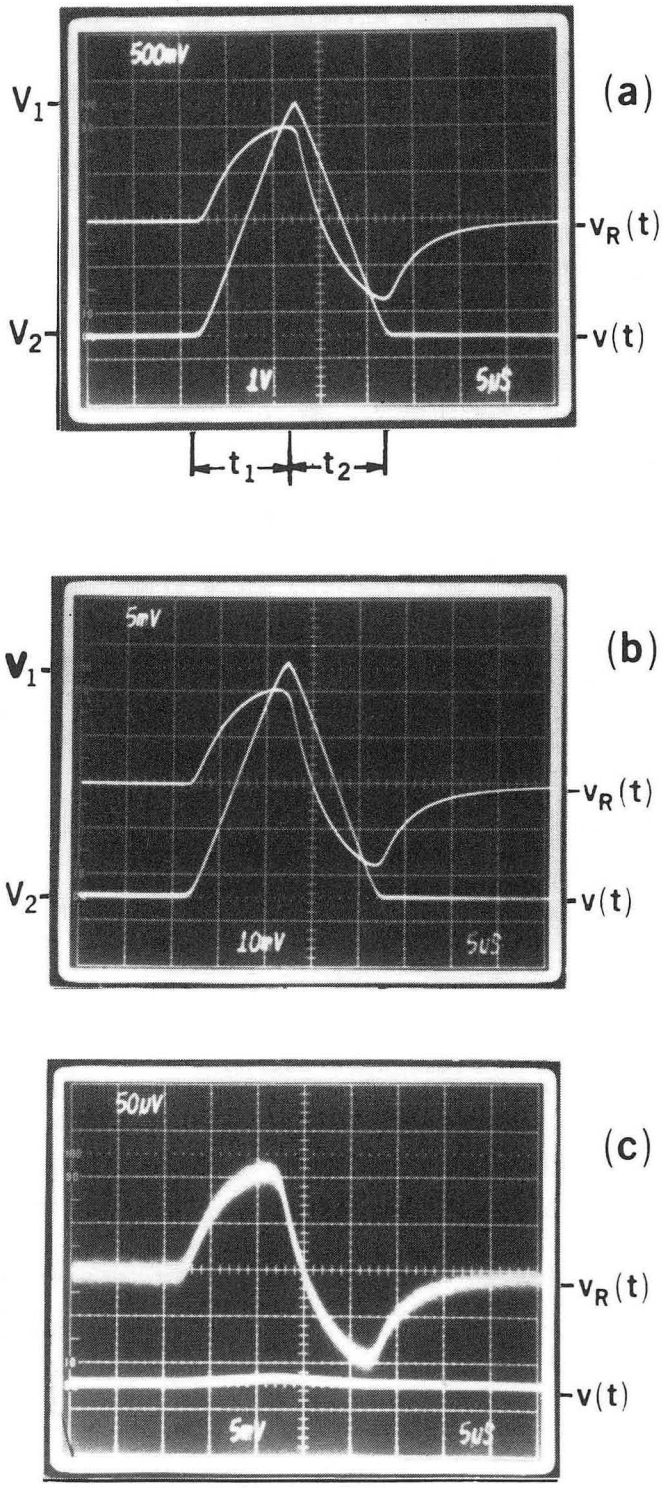

XBB 853-2494

Fig. 4 Response of the differential discriminator to a triangular input pulse shows a negligible time walk in the amplitude range from 5 V (a) to 50 mV (b) and 0.5 mV (c).

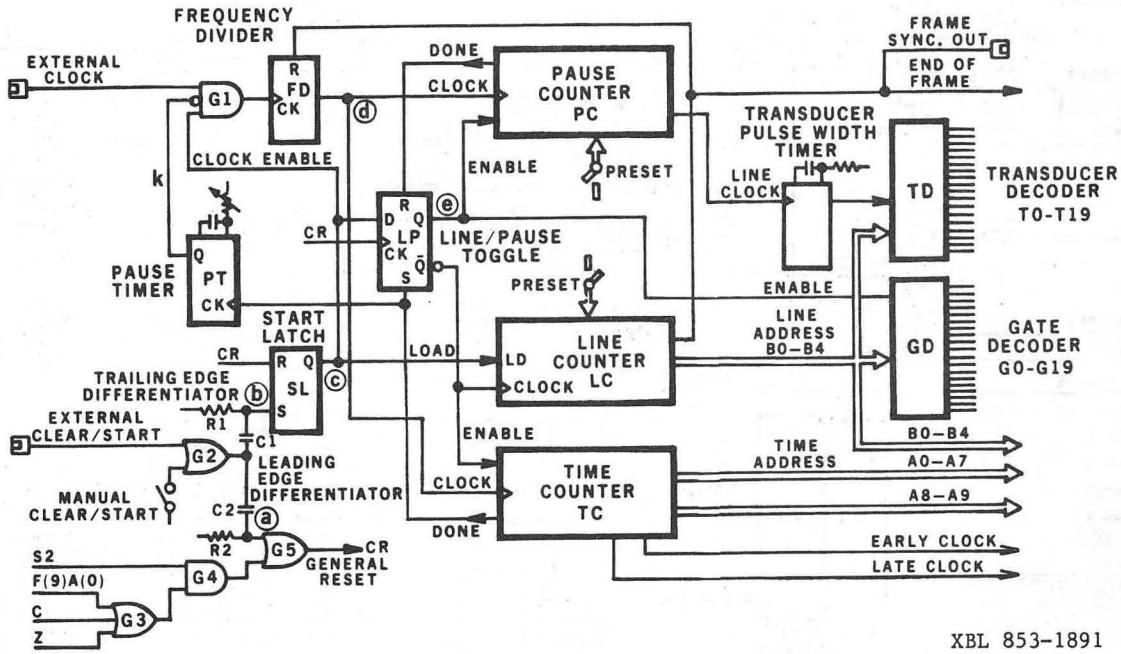

Fig. 5 Block diagram of the sequencer for controlling the transducers and echo processing logic of the acoustic imaging system.

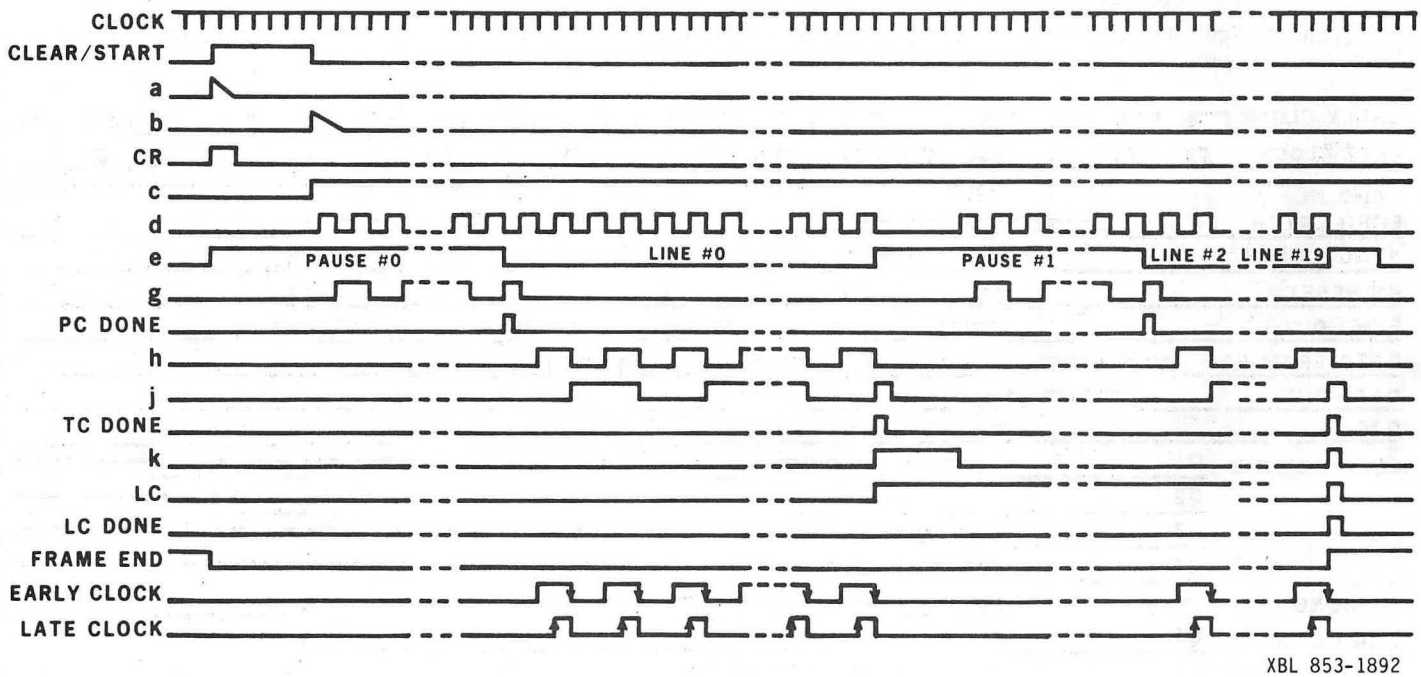

Fig. 6 Basic timing diagram of the sequencer.

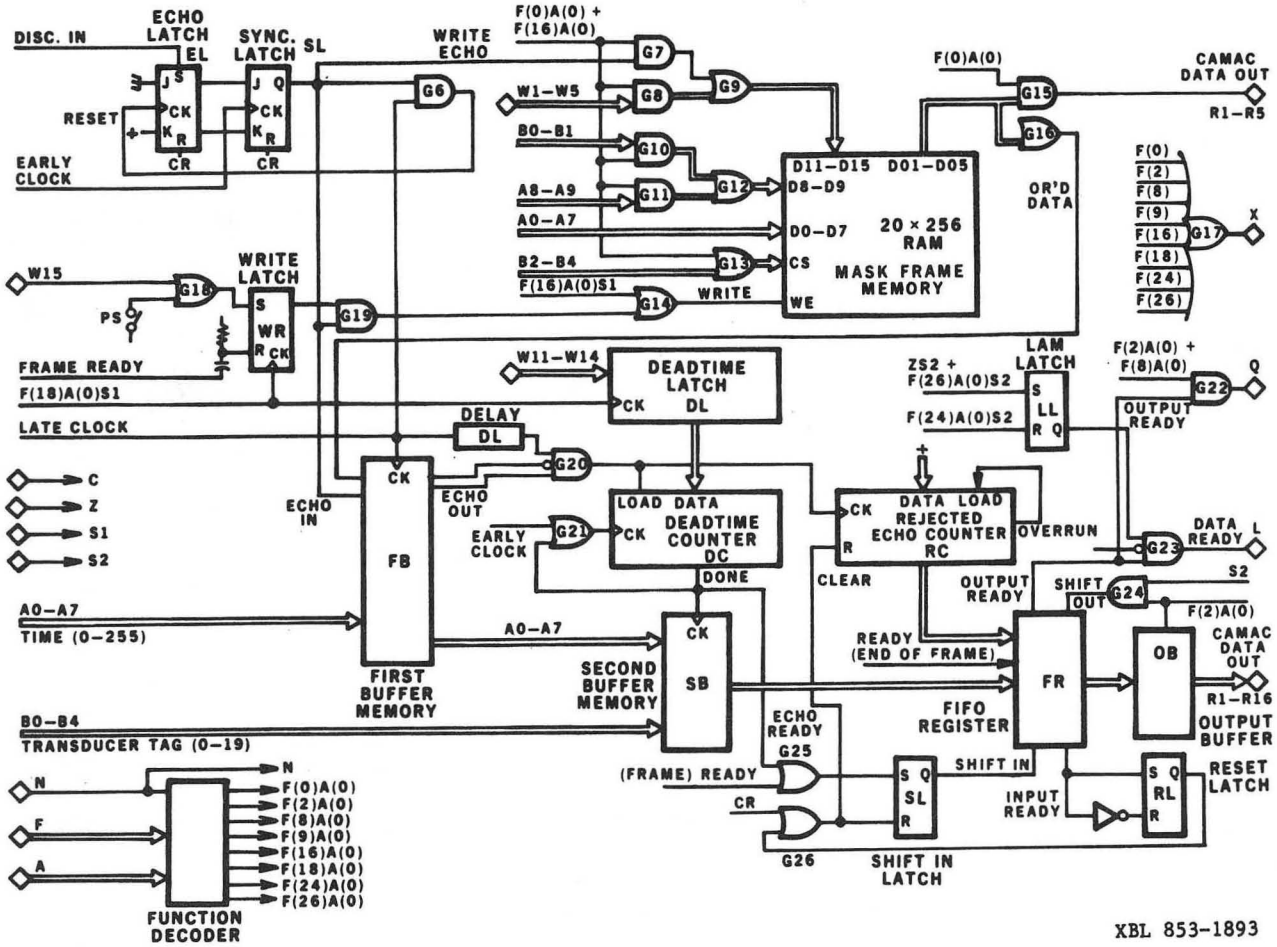

Fig. 7 Echo digital processing, mask memory and CAMAC logic block diagram of the acoustic imaging system.

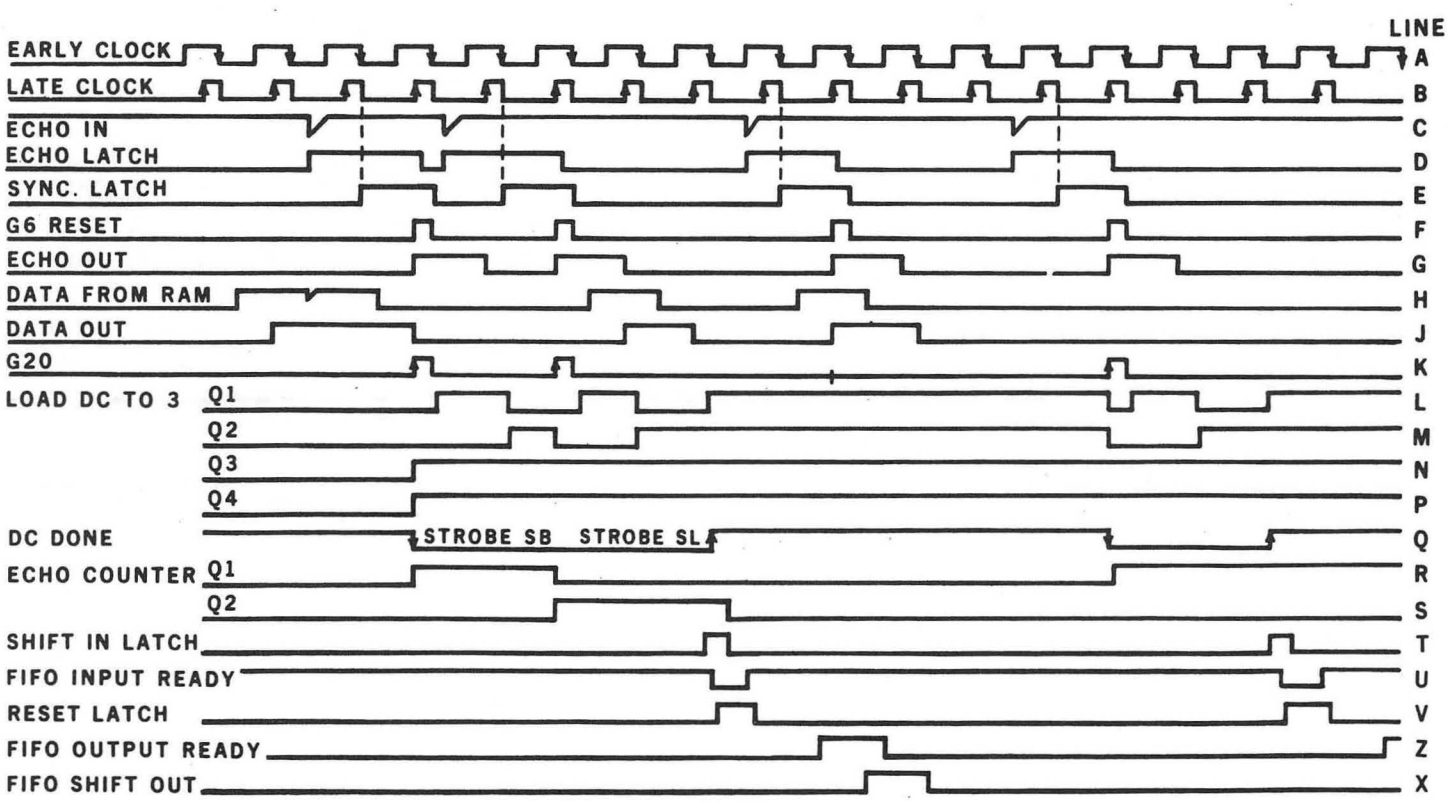

Fig. 8 Basic timing diagram of echo processing and data transfer.

This report was done with support from the Department of Energy. Any conclusions or opinions expressed in this report represent solely those of the author(s) and not necessarily those of The Regents of the University of California, the Lawrence Berkeley Laboratory or the Department of Energy.

Reference to a company or product name does not imply approval or recommendation of the product by the University of California or the U.S. Department of Energy to the exclusion of others that may be suitable.

TECHNICAL INFORMATION DEPARTMENT
LAWRENCE BERKELEY LABORATORY
UNIVERSITY OF CALIFORNIA
BERKELEY, CALIFORNIA 94720