LBL-19319
c.2

Lawrence Berkeley Laboratory
UNIVERSITY OF CALIFORNIA

RECEIVED
LAWRENCE
BERKELEY LABORATORY
APR 17 1985
LIBRARY AND
DOCUMENTS SECTION

Accelerator & Fusion Research Division

Presented at SPIE's 1985 Los Angeles Technical Symposium on Optical and Electro-Optical Engineering, Los Angeles, CA, January 20-25, 1985

APPLICATIONS OF HOLOGRAPHY TO X-RAY IMAGING

M. Howells, M. Iarocci, J. Kenney, H. Rarback,
R. Rosser and W. Yun

March 1985

TWO-WEEK LOAN COPY
This is a Library Circulating Copy
which may be borrowed for two weeks.

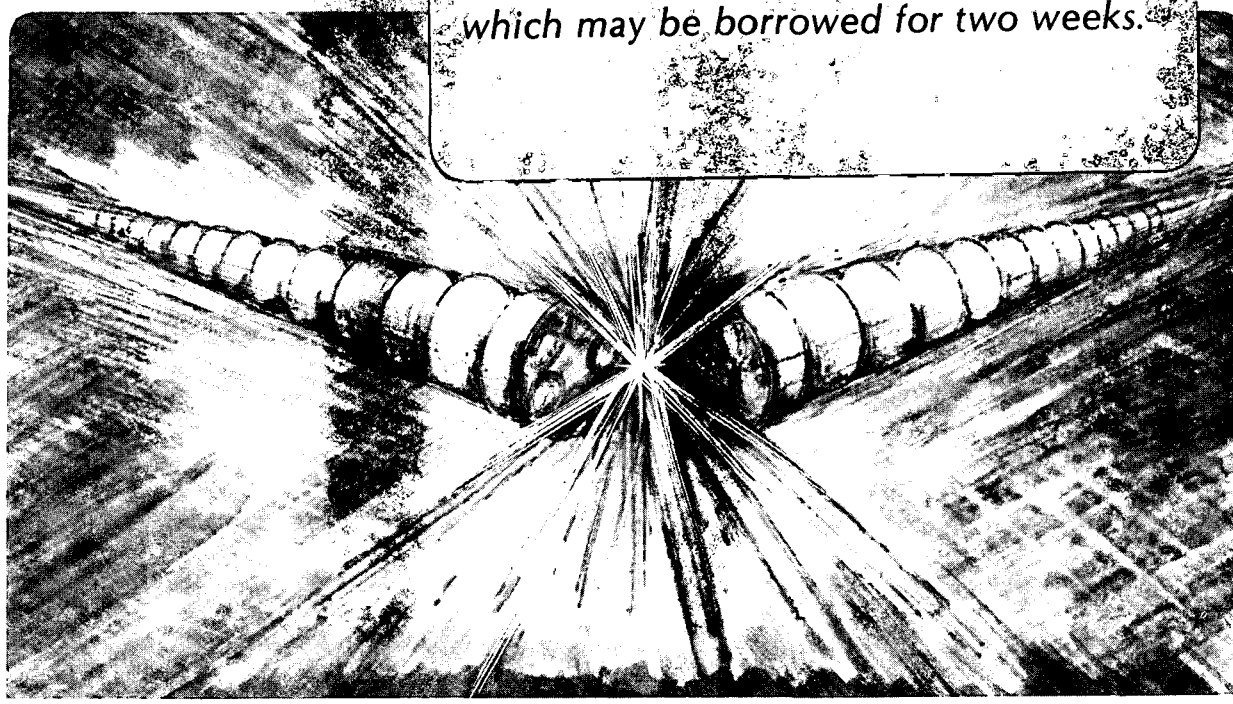

LBL-19319
c.2

Prepared for the U.S. Department of Energy under Contract DE-AC03-76SF00098

DISCLAIMER

This document was prepared as an account of work sponsored by the United States Government. While this document is believed to contain correct information, neither the United States Government nor any agency thereof, nor the Regents of the University of California, nor any of their employees, makes any warranty, express or implied, or assumes any legal responsibility for the accuracy, completeness, or usefulness of any information, apparatus, product, or process disclosed, or represents that its use would not infringe privately owned rights. Reference herein to any specific commercial product, process, or service by its trade name, trademark, manufacturer, or otherwise, does not necessarily constitute or imply its endorsement, recommendation, or favoring by the United States Government or any agency thereof, or the Regents of the University of California. The views and opinions of authors expressed herein do not necessarily state or reflect those of the United States Government or any agency thereof or the Regents of the University of California.

Applications of Holography to X-ray Imaging

M. Howells***, M. Iarocci**, J. Kenney*, H. Rarback**, R. Rosser* and W. Yun*

*Department of Physics, State University of New York,
Stony Brook, New York 11794

**National Synchrotron Light Source, Brookhaven National Laboratory,
Upton, New York 11973

***Center for X-ray Optics, Lawrence Berkeley Laboratory,
Berkeley, California 94720

Abstract

In this paper we consider various applications of holographic techniques to the problem of soft x-ray imaging. We give special attention to imaging biological material using x-rays in the wavelength range 24-45Å. We describe some experiments on formation and reconstruction of x-ray holograms and propose some ways in which holographic techniques might contribute to the difficult problem of fabricating optical elements for use in the soft x-ray region.

Introduction

In the spirit of this meeting we offer a collection of applications of holographic techniques to the problem of soft x-ray imaging of biological material.[1, 2] Some are things we have done; others are plans for the future. Some utilize x-rays only; others also involve the use of lower energy photons. We make no attempt to give a complete coverage. Indeed, we will not describe the most important present day example of our title subject which is direct x-ray imaging with holographically generated zone plate lenses.[3]

The reason we are interested in imaging biological material with soft x-rays is that there exists a wavelength region (24-45Å) where there is a contrast mechanism for natural biological material whilst water is effectively transparent. The contrast comes from photoelectric absorption. This wavelength "window" arises because of the positions of the oxygen K absorption edge (23.6Å) and the carbon K absorption edge (44.8Å). Taken together with the 1/e absorption length for soft x-rays in biological material which is about 0.5-1.0μm,[2] these circumstances lead us to believe that we can make soft x-ray images of biological cells in something near to their natural state, i.e. without dehydration, sectioning, fixing or staining.

We consider holography applications under the following headings:

- Direct hologram formation with soft x-rays[4]
- Reconstruction technique for holograms recorded with soft x-rays
- High resolution zone plates by spatial frequency multiplication[5, 12]
- Soft x-ray beam splitters
- Grazing incidence linear zone plates.

Direct hologram formation with soft x-rays

The concept of making holograms with x-rays is a very old one and various reviewers have described it.[4, 6, 7] The present authors have been active in the field since 1982 and have recorded a variety of holograms using synchrotron radiation soft x-rays from the U15 beamline[8] at the 750 MeV storage ring at Brookhaven. Initially these were mainly of demonstration objects such as spheres and cylinders for which calculated results are obtainable. We have just begun to attempt biological samples. Our first choice for these (like workers in electron microscopy and x-ray microscopy before us) is diatoms. These are easily obtained, possess sharp features to show spatial resolution and give no problems of motion or radiation damage. We show two holograms of these and one of asbestos fibres (figs 1-3). All three were made using Gabor geometry[9] as shown in figure 4 which describes the notation. We see a rich array of image information similar to a highly magnified visible light hologram. However, we have found considerable difficulties in reconstructing these holograms, and to these questions we now turn.

Reconstruction technique for holograms recorded with soft x-rays

Since we are engaged in developing a form of microscopy we naturally feel that we should achieve a useful degree of magnification. For reconstruction by a point source distant Z_c from the hologram, and of wavelength λ_2 the magnification of the real image is[9]

$$M_R = m\left[1 - \frac{m^2\lambda_1 Z_1}{\lambda_2 Z_2} - \frac{Z_1}{Z_R}\right]^{-1} \qquad (1)$$

Figure 1. Gabor Hologram of a diatom recorded on Agfa 8E56HD film with 32Å x-rays. Magnification of the 5x4 in^2 print = 350, working distance = 14 mm, sample was illuminated by a 12.5 μm pinhole at 600 mm.

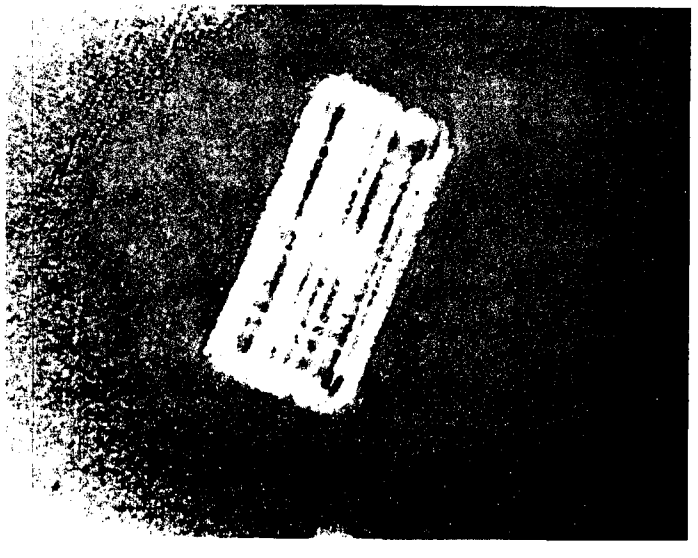

Figure 2. Same as figure 1 except that magnification of the 5x4 in^2 print = 570.

Figure 3. Gabor Hologram of 0.5-2.0μm diameter asbestos fibers recorded on Agfa 8E56HD film with 31Å x-rays. Magnification of the 5x4 in^2 print = 250, working distance = 29 mm, sample was illuminated by a 1μm pinhole at 115 mm.

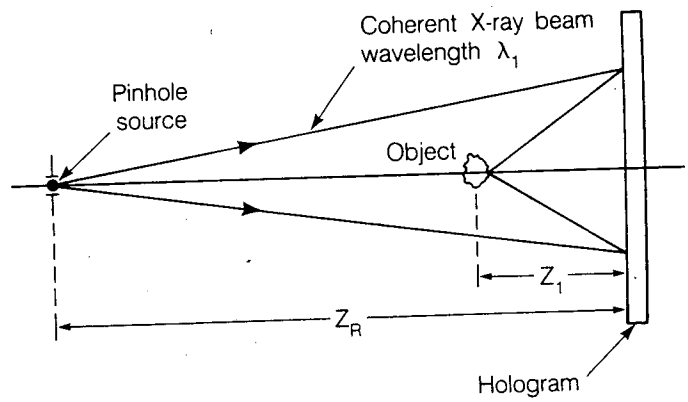

Figure 4. Geometry and notation for formation of a Gabor Hologram.

where m is the factor by which the recorded hologram is enlarged. When $Z_c = \infty$, and m = 1 we see that $M_R \rightarrow (1 - Z_1/Z_R)^{-1} \simeq 1$ which is not desirable. However, even for m = 1, we can get a large magnification by choosing Z_c near to the value for which the denominator of (1) vanishes; i.e. when

$$\frac{1}{Z_c} = \frac{\lambda_2}{\lambda_1}\left[\frac{1}{Z_1} - \frac{1}{Z_R}\right] \qquad (2)$$

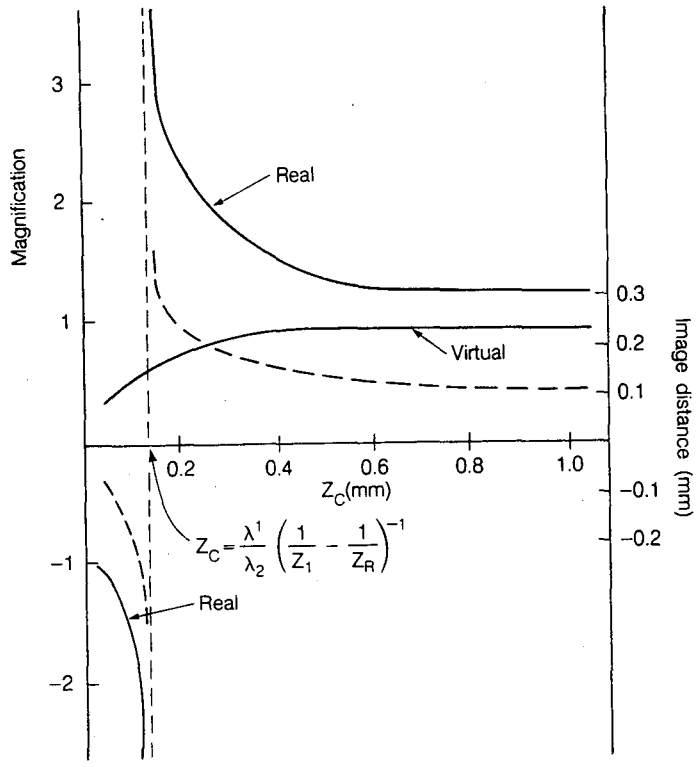

Figure 5. Calculated behavior of the magnification (continuous curves) of the reconstructed image of the Gabor Holograms shown in figs 1 and 2 for reconstruction with He:Cd laser light (λ_2 = 4416Å, m=1). The real image position is also shown (dashed curve, right hand scale). These figures illustrated the practical difficulty of achieving a high magnification with visible light reconstruction.

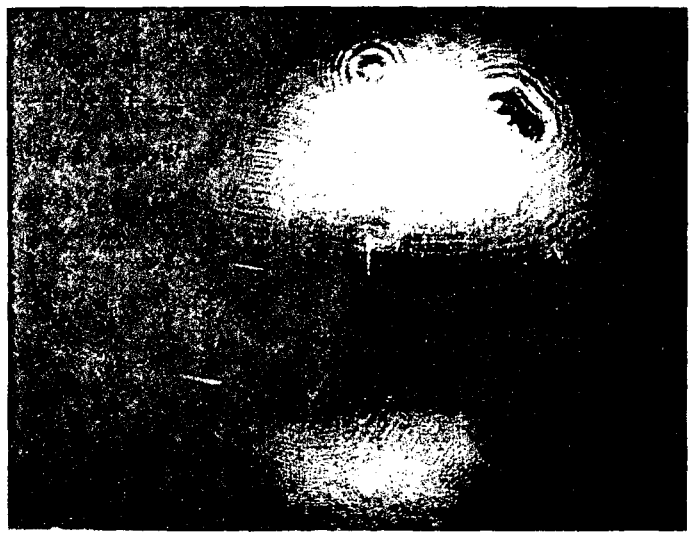

Figure 6. Successful reconstruction of the hologram shown in fig 3 using λ_2 = 4416Å, Z_c = 0.9 mm, holographic magnification = 1.7, magnification of 5x4 in^2 print = 360. Note that the narrowest needle is about 1/2 mm on the print or 1.4 μm in object space. On this basis we estimate the resolution as 1-2 μm.

This occurs when the reconstruction source is at the focus of the zone plate patterns in the hologram and the image distance approaches infinity. The result of choosing Z_c in this region is shown in fig 5 which refers to the holograms in figs 1 and 2. We see that Z_c needs to be extremely small ~ 0.1 mm in this case. If the reconstruction source is provided by a diffraction limited pinhole and λ_2 is in the visible we find that for obtainable pinholes we can illuminate only a very small area, for our case less than the full hologram. Worse still, as one might expect the holographic aberrations show singular behavior similar to the magnification near the singular point defined by (2). In other words we are obliged to use a larger value for Z_c and therefore to achieve very little holographic magnification. At the present essentially all the magnification in our reconstructions is provided by the light microscope. This is not a great limitation to the resolution while we are using photographic film, but if we include aberration arguments as well, then we can see that the only way to achieve resolutions much less than a micron is to magnify the hologram. For the present we seem to be achieving resolutions near the limit of our approach of visible light reconstruction of an original Gabor hologram recorded on photographic film. A good demonstration of this is the reconstruction of the hologram of fig 3 which is shown in fig 6. This shows a resolution of 1-2 μm.

High resolution zone plates by spatial frequency multiplication

One of the chief problems of x-ray optics has always been the provision of x-ray lenses of adequate resolution. The normal solution is to make transmission Fresnel Zone Plates either by holography[10] or electron beam writing.[11] The resolution of such a lens in first order is limited to the width of the smallest (outer) zone or, in other words, to the resolution of the available microfabrication technology. At the present time, the very best fabricators of zone plates achieve zone widths of 500-1000Å. These certainly allow many interesting experiments but it is agreed that the goal is zone widths of 100-200Å. The only way to achieve resolution better than the zone width is to utilise a higher order focus. This is generally not practical on efficiency grounds, but it provides a clue to a strategy for circumventing the first order diffraction limit. Consider the zone plate shown in figure 7. The first and third order diffracted beams are shown for plane wave illumination. This leads to diffraction limited focal spots of half width 1.22Δ and 0.41Δ at distances f and f/3 respectively from the zone plate. The notation is explained in fig 7. Now, suppose we place a recording medium at distance f/2 as shown. The recording would be a hologram of the third order focus with the converging first order beam as reference wave. This recording is apparently a zone plate of focal length f/8 and numerical aperture (and outer zone spacing) four times less than the original zone plate. We have thus made a fourfold gain in first order resolution.

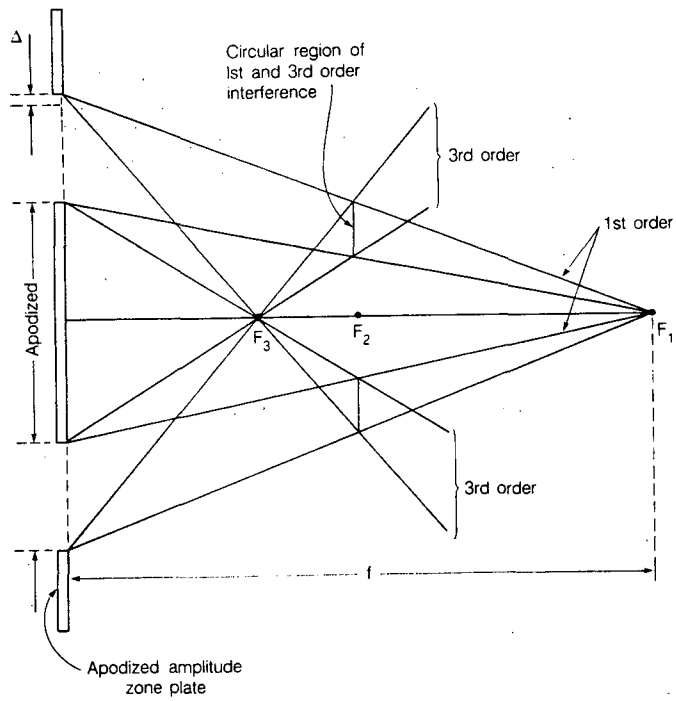

Figure 7. Geometry for recording of a high resolution zone plate by spatial frequency multiplication. Δ is the width of the narrowest zone. The original zone plate has alternating transparent and opaque zones only in the region shown dashed. The rest is all opaque. Illumination is assumed to be by an axial plane wave. F_1, F_2 and F_3 are the positive first, second and third order foci of the zone plate.

We may legitimately ask what are the conditions for the above scheme to work? The following are certainly necessary:

- A technology must exist for converting the recording into a zone plate with suitable fidelity. This would presumably involve high resolution x-ray resist.

- In view of the desired values of the minimum zone width it will be necessary to use a soft x-ray source for the exposure. This source must have very high coherent power to make the exposure time reasonable. We believe that even a storage ring bending magnet is marginal and that a soft x-ray undulator may be needed.[21]

- The illuminating beam must be sufficiently monochromatic for the third order focus to be diffraction limited; i.e. $\lambda/\Delta\lambda > \frac{3n}{0.61}$

- The original zone plate must be sufficiently well made that the diffraction limited third order spot size is achieved. The Rayleigh quarter wave criterion would require placement of each ring with an error less than 1/6 (λx numerical aperture). Although this sounds challenging it is probably achievable using holographic methods.

Soft x-ray beam splitters

Holographic and interferometric experiments in the soft x-ray region, especially the region between 24 and 45Å, have always been hampered by the lack of efficient optical elements. Even the recent advances of multilayer optics have not impinged much on this spectral region, due to absorption problems in available spacer materials. For the same reason, organic crystals are rather inefficient, and normal incidence optical elements at these short wavelengths tend to have prohibitively difficult fabrication tolerances.[13] One hopeful step is the relatively recent demonstration of the use of reflection gratings in the so called "conical diffraction"[14] mode. For the grazing incidence cases of interest to us, this means using the grating with the incoming rays almost parallel to the grooves. It is a characteristic of conical diffraction that diffraction efficiencies are much higher than for normal (nearly in plane) diffraction.[15]

A novel possibility achievable using conical diffraction is an efficient soft x-ray beam splitter. This is shown in fig 8.

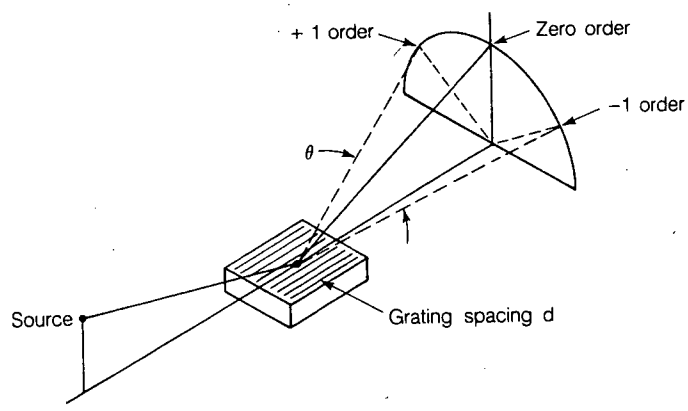

Figure 8. Geometry for high efficiency, soft x-ray beam splitter.

By using a holographically produced grating with a sinosoidal groove profile, it should be possible to diffract ~ 80% of the incident light into the ±1 orders, thus producing an efficient beamsplitter for a single soft x-ray wavelength.

The full angle (θ) between the two coherent beams is limited by the groove spacing according to the formula

$$\theta = 2 \sin^{-1}\{\frac{\lambda}{d}\} \qquad (3)$$

For a 3600 line/mm grating, for example, this would give a separation of 1.2 degrees at λ = 30Å. Of course, one could make a classical interferometer much more easily if this angle were larger as it is in some existing interferometer schemes using transmission gratings,[16] multilayers[17] or perfect crystals[18]. However, none of these schemes is very efficient in the XUV region so we believe the grazing incidence grating has a place on grounds of efficiency and that interesting interferometer schemes do exist which are suited to its geometry.

The efficiency of the present system would be related to the reflectivity of the material at the angle of incidence used. For example, with nickel at 2° incidence angle, the reflectivity at 30Å is 88% giving about 35% each in the ±1 orders and 18% in zero order.

The beam splitters could be used to build a soft x-ray interferometer and hence a phase contrast microscope and one could even envisage soft x-ray fourier transform spectroscopy.

Grazing incidence linear zone plates

We turn now to another strategy for achieving spatial resolution values which are smaller than those of available microfabrication techniques. Consider the arrangement of fig 9. A collimated soft x-ray beam is incident from the left on a plane, grazing incidence, reflection grating of variable spacing. At each location the groove spacing is chosen so that an incident ray is focussed to the line focus shown in the figure. The groove frequency n(x) needed to achieve this is given by

$$\lambda\, n(x) = \cos\alpha - \frac{x}{\sqrt{h^2 + x^2}} \qquad (4)$$

Where the notation is given in figure 9. The diffraction limited resolution Δ_D of this arrangement is given by

$$\Delta_D \simeq \lambda/(\theta_2 - \theta_1) \qquad (5)$$

The approximation of the numerical aperture by $(\theta_2 - \theta_1)^{-1}$ is justified by the small values of θ_1 and θ_2. For λ = 30Å the largest deflection angle that can be achieved with specular reflection is about 11° (incidence angle 5 1/2°). If we set α = 1°, θ_1 = 2° and θ_2 = 10° equation (4) gives Δ_D = 214Å : an extremely interesting value; and this is achieved with a maximum line density (corresponding to θ_2) of about 5000 lines per mm.

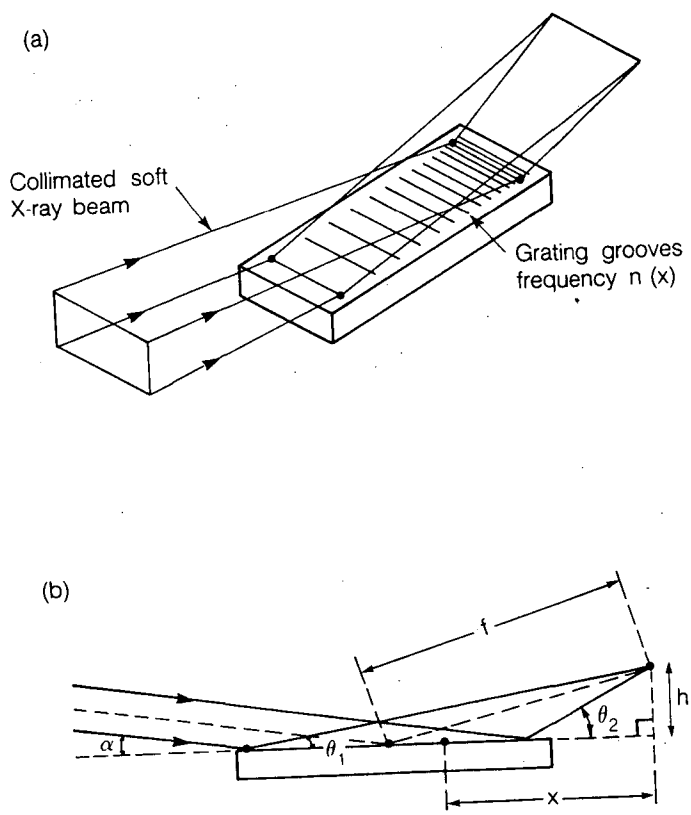

Figure 9. (a) Principle of a diffractive "cylindrical lens" using a plane grating with variable groove spacing, (b) notation for discussion of (a). x is the coordinate of a general point on the grating.

The conditions for achieving this in practice are as follows:

- The incoming beam must have a spectral purity ($\lambda/\Delta\lambda$) greater than the number of grooves of the grating. The latter can be found by integration of equation (4). It is proportional to f which acts as a scale factor of the arrangement. For example, for f = 5 mm, and the angles given above the number of grooves is about 6000: a difficult but not impossible value.

- The grooves must be positioned at their ideal positions with a maximum error of 1/4 of a period (Rayleigh Criterion).

- At 1° grazing incidence, for 30Å x-rays, the flatness tolerance of the substrate (Rayleigh Criterion) is about 1/30 of a wavelength of visible light. This is straightforward for the small areas involved.

We note the following advantages of making an optic in this way:

- The zero order beam is not mingled with the focussed beam

- With a rigid substrate more freedom in choosing the groove shape is possible than for self supporting structures. This includes the possibility of phase gratings. For example one might manufacture the device by holography[19] (sine wave profile), microcircuit methods[11] (square wave profile) or ruling engine[20] (blazed profile).

- A rigid substrate is more robust in hostile environments and allows freedom to make optimum materials choices. For example one could use water cooling to deal with high power applications.

So far all of this is applicable only to one dimensional focussing. We naturally enquire whether two such devices can be crossed to give two dimensional focussing in the style of the Kirkpatrick-Baez reflection microscope. This is certainly possible in principle, but for the second device we are no longer dealing with a collimated beam. The convergence angle leads to an additional aberration which turns out to be a form of coma. This would have the effect of limiting $(\theta_2-\theta_1)$ to values less than about five degrees. Nevertheless we see from equation (5) that the values of Δ_D are still attractive.

Acknowledgements

The authors wish to acknowledge support for their research as follows: J.K., R.R., W.Y.: work supported in part by the National Science Foundation under Grant No. PCM 83-13784, M.I., H.R.: work performed under the auspices of the U.S. Department of Energy by Brookhaven National Laboratory under Contract No. DE-AC02-76CH00016, M.H.: work performed under the auspices of the U.S. Department of Energy by Lawrence Berkeley Laboratory under Contract No. DE-AC03-76SF00098.

References

1. See for example X-ray Microscopy, G. Schmahl and D. Rudolf (eds), Springer Series in Optical Sciences, Springer Verlag, Berlin, 1984.
2. Soft X-ray Microscopes, J. Kirz and H. Rarback, Rev. Sci. Inst. 56, 1, 1 (1985).
3. G. Schmahl et al loc. cit. ref 1. p. 192
4. M.R. Howells, loc. cit. ref 1. p 318 and M.R. Howells et al. Proc. SPIE 447, 193 (1983).
5. G.Schmahl and D. Rudolf in Scanned Image Microscopy E.A.Ash (ed), Academic, London, 1980.
6. J.C. Solem and G.C. Baldwin, Science, 218, 229 (1982).
7. V.V. Aristov and G.A. Ivanova, J. Appl. Cryst. 12, 19 (1979).
8. The Development of a Scanning Soft X-ray Microscope, Ph.D. Thesis, State University of New York, Stony Brook, H.M. Rarback, 1983.
9. See for example, R.J. Collier, C.B. Burckhardt and L.H. Lin, Optical Holography, Academic, 1971.
10. G. Schmahl et al, loc. cit ref 1, p.63.
11. D. Kern et al Proc. SPIE, 447, 204 (1983)
12. Fabrication of high resolution zone plates by Spatial Frequency Multiplication, Section I: Theory, W.B. Yun and M.R. Howells, Brookhaven report BNL 35628, 1985.
13. I. Lovas et al Proc. SPIE, 316, 90 (1981).
14. Imaging Properties of Diffraction gratings, W. Werner Ph.D. Thesis, University of Delft, Netherlands 1970 and W. Werner, Appl. Opt. 6, 10, 1691 (1967).
15. W. Werner Appl. Opt. 16, 8, 2078 (1977) or M. Neviere et al J.O.S.A. 68, 1106 (1978).
16. E. Leith, Proc. AIP 75, 242 (1981), Conference on Low Energy X-ray diagnostics, Monterey, 1981.
17. D.T. Attwood et al Proc. AIP, 90, 254 (1982) Conference on Laser Techniques and Extreme Ultra Violet Spectroscopy, Boulder, 1982.
18. U. Bonse and M. Hart, Appl. Phys. Lett 6, 155 (1965).
19. H. Noda et al J.O.S.A. 64, 8, 1031 (1974).
20 See for example T. Kita and T. Harada, Appl. Opt. 22, 6, 819 (1983) and T. Kita et al Appl. Opt. 22, 4, 512 (1983).
21. G. Schmahl private communication.

This report was done with support from the Department of Energy. Any conclusions or opinions expressed in this report represent solely those of the author(s) and not necessarily those of The Regents of the University of California, the Lawrence Berkeley Laboratory or the Department of Energy.

Reference to a company or product name does not imply approval or recommendation of the product by the University of California or the U.S. Department of Energy to the exclusion of others that may be suitable.

TECHNICAL INFORMATION DEPARTMENT
LAWRENCE BERKELEY LABORATORY
UNIVERSITY OF CALIFORNIA
BERKELEY, CALIFORNIA 94720