LBL-19540 c.2

Lawrence Berkeley Laboratory
UNIVERSITY OF CALIFORNIA

LAWRENCE BERKELEY LABORATORY
1986
LIBRARY AND DOCUMENTS SECTION

Accelerator & Fusion Research Division

Presented at the 11th Symposium on Fusion Engineering, Austin, TX, November 18-22, 1985

THE EFFECT OF OXYGEN CONCENTRATION ON THE CORROSION OF MOLYBDENUM IN FLOWING WATER

R.P. Wells

November 1985

TWO-WEEK LOAN COPY
This is a Library Circulating Copy which may be borrowed for two weeks.

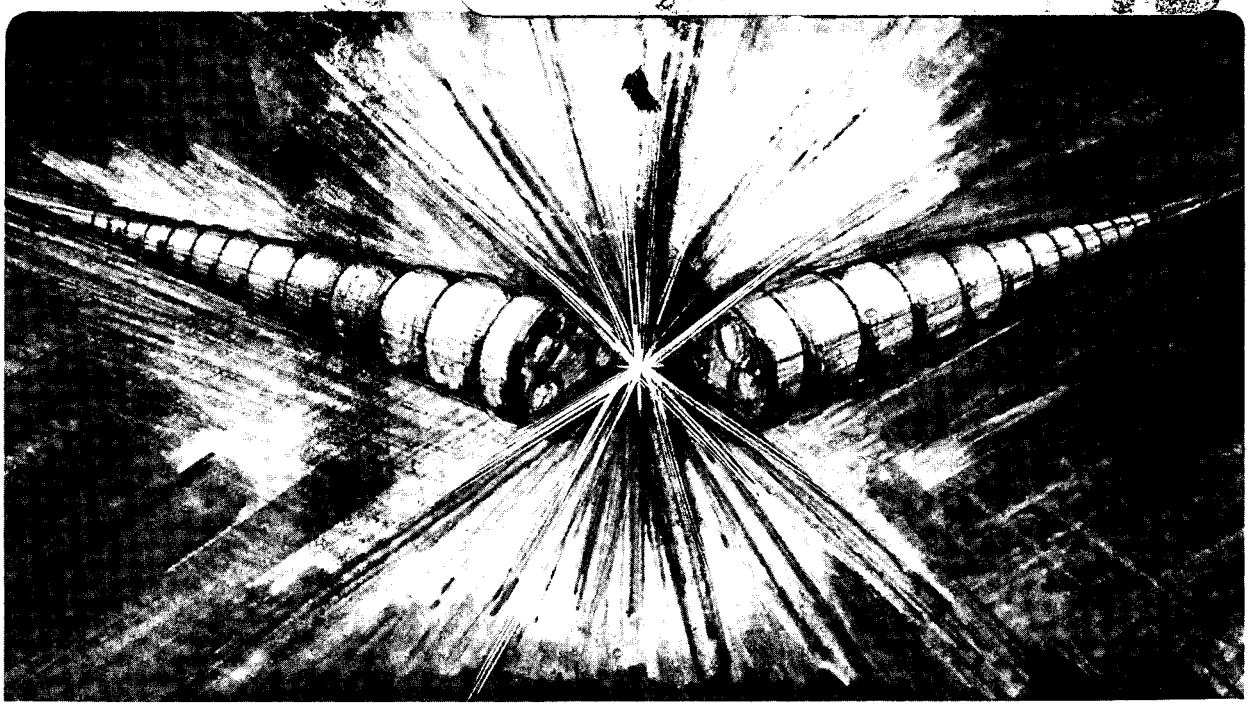

Prepared for the U.S. Department of Energy under Contract DE-AC03-76SF00098

LBL-19540 c.2

DISCLAIMER

This document was prepared as an account of work sponsored by the United States Government. While this document is believed to contain correct information, neither the United States Government nor any agency thereof, nor the Regents of the University of California, nor any of their employees, makes any warranty, express or implied, or assumes any legal responsibility for the accuracy, completeness, or usefulness of any information, apparatus, product, or process disclosed, or represents that its use would not infringe privately owned rights. Reference herein to any specific commercial product, process, or service by its trade name, trademark, manufacturer, or otherwise, does not necessarily constitute or imply its endorsement, recommendation, or favoring by the United States Government or any agency thereof, or the Regents of the University of California. The views and opinions of authors expressed herein do not necessarily state or reflect those of the United States Government or any agency thereof or the Regents of the University of California.

THE EFFECT OF OXYGEN CONCENTRATION ON THE CORROSION OF MOLYBDENUM IN FLOWING WATER*

R.P. Wells
Lawrence Berkeley Laboratory
University of California
Berkeley, CA 94720 USA

Abstract

Corrosion of molybdenum tubes used in actively water cooled particle accelerators has become a concern in both the positive and negative ion based neutral beam programs at the Lawrence Berkeley Laboratory (LBL). To ascertain the effect of dissolved oxygen concentration in the corrosion of molybdenum accelerator grid rails, weight loss from samples subjected to flowing Low Conductivity Water (LCW) of various oxygen concentrations was monitored over several weeks. The results indicate that the corrosion of molybdenum tubes can be reduced to acceptable levels by limiting the oxygen concentration in the water.

Introduction

Long pulse positive[1] and negative[2] ion based neutral beam accelerators designed at the Lawrence Berkeley Laboratory employ molybdenum tubes as electrodes. In these devices, water flowing at moderate velocities through the tube bore dissipates the energy absorbed at the electrode surface on a continuous basis. While molybdenum is usually considered to have excellent resistance to corrosive attack by water, evidence of molybdenum pentoxide ("moly blue") formation was found after two day interruptions in the operation of the first LBL Long Pulse Accelerator (LPA). During these periods of non-operation, the cooling water supply was turned off and inadvertantly air was allowed to mix with the water trapped in the electrodes. The problem was remedied by maintaining a slight positive pressure in the cooling water circuits at all times. Subsequent accelerators containing water cooled molybdenum electrodes have all used cooling systems which maintain a positive pressure when shutoff and oxygen concentrations of 20 ppb or less when operating. The longest accumulated running time on a LBL type long pulse source is the approximately three years sustained by the 10 x 40 cm LPA. To date no failures have occurred due to molybdenum corrosion.

The acquisition of the LBL type water cooled Common Long Pulse Source (CLPS) by the three major U.S. fusion experiments, TFTR, Doublet III-D and MFTF-B, has brought into question the safe operating level of dissolved oxygen in the source cooling water supplies. To provide a quantitative answer, a series of tests were performed at LBL by flowing LCW with various oxygen concentrations through thin wall molybdenum tubes.

Method

Test specimens consisted of commercially pure molybdenum tubes 76 mm long having an outside diameter of 5.06 mm and a wall thickness of 0.27 mm. Specimens were prepared by heating to 1000 °C for 10 minutes in a hydrogen atmosphere to remove any surface oxides and/or contaminants. After firing, care was taken during handling to prevent any new contamination. Clean specimens were weighed and then inserted into either the test section of the closed-loop water system in Figure 1 or into a test loop connected to the Laboratory's LCW supply.

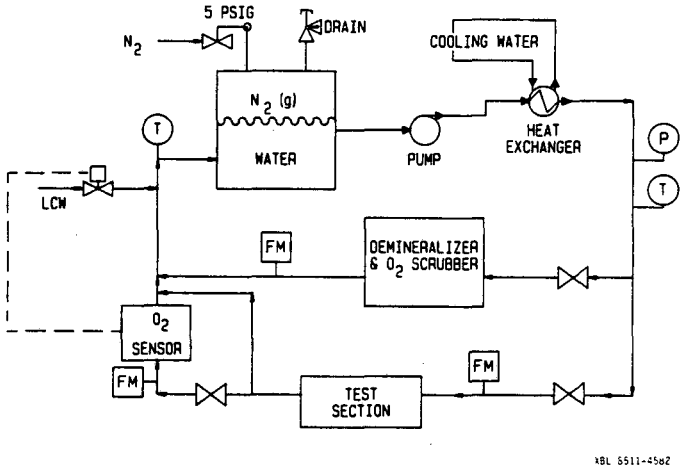

Figure 1 Closed-loop water system for controlled oxygen tests.

After periods of between 3 and 7 days, samples were removed, immediately rinsed with alcohol and blown dry. These specimens were then weighed on an Ainsworth type BB balance to an accuracy of 0.3 mg or 0.01%. Following weighing, samples were reinserted and the test restarted. These procedures were repeated for cumulative test durations of from 400 to 700 hours. All tests were performed simultaneously on two specimens connected in series. Tygon tubing was used to make connections between samples and between the samples and water supply.

Tests can be grouped into two categories:

1. multiple oxygen concentrations at a single flow rate

2. fixed oxygen concentration at multiple flow rates.

The flow rate for the first set of tests was selected to produce the same Reynolds number as present in the exit and gradient grid electrodes of the CLPS. Flow rates in the second set of tests were selected to cover a useful range of Reynolds numbers. Initial tests were performed at an oxygen concentration of 80-100 ppb to match the conditions of the MFTF-B cooling water supply. Subsequent tests were performed at concentrations of 40-45 ppb and ~ 10,000 ppb. A summary of the test parameters is given in the next section.

Low oxygen concentration tests were performed using a small DXD Corp. model HPS-5000 closed-loop water supply specially modified for these tests. Auxillary equipment included a Beckman, Model 7001, Oxygen Concentation Monitor and a LCW make-up line. The monitor sampled the water supplied to the test section, activating a solenoid valve in the LCW make-up line when the oxygen content dropped below a preset level. The make-up water was supplied by the Laboratory LCW system which contains a high dissolved oxygen concentration. A slight positive pressure of nitrogen was maintained over the water in the reservoir to prevent the intrusion of air.

*This work was supported by U.S. Department of Energy under contract no. DE-AC03-76SF00098.

Nitrogen gas was also used to flush air from the system after specimen insertion. Valving, not shown in Figure 1, was incorporated to back-fill and purge reinserted samples of air prior to test resumption.

High oxygen concentration tests were performed by placing samples into a piping run connected directly to the laboratory LCW system. The test loop consisted of a pressure regulator and two parallel lines containing flow control valves, shutoff valves and flow meters. Two lines were needed to perform simultaneous tests at different flow rates. No effort was made to control the oxygen concentration in these tests. However, periodically, the oxygen content was measured using a modified Winkler[3] method and found to be ~10 mg/l (10000 ppb).

Results and Discussion

Data for weight loss of samples subjected to flowing water containing 10,000 ppb and 80-100 ppb of dissolved oxygen are plotted in Figure 2. As illustrated by the least squares fit superimposed upon this data, after a short initial period, weight loss linearly increased with time. The 10,000 ppb test results are for a single pair of specimens, while the 80-100 ppb results were gathered from four specimens run at two different times. Note the relatively rapid attack by water when high oxygen concentrations are present.

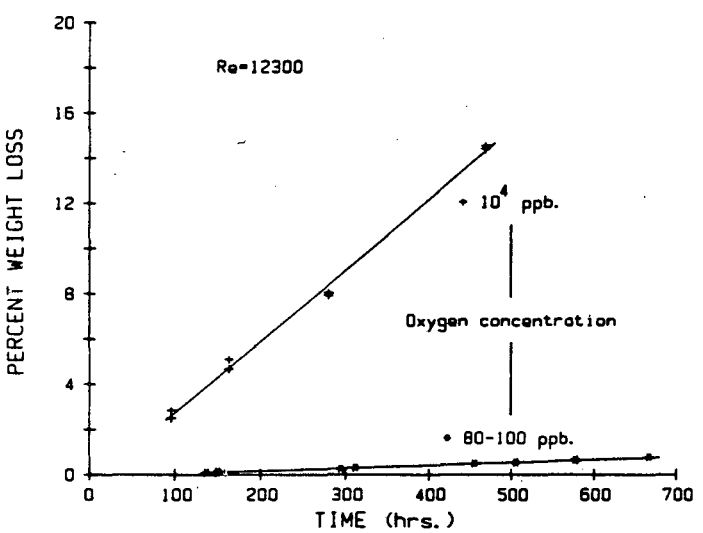

Figure 2 Weight loss as a function of time for oxygen concentrations of 80-100 ppb and 10,000 ppb by weight.

Results from tests using water with 40-45 ppb oxygen are plotted in Figure 3. The first pair of specimens (17 and 18) exhibited an initial weight gain followed by a slow steady decline. When this test was repeated (specimens 20 and 21), an apparent asymtotic weight gain of 0.2% occurred during the 450 hour test period.

Two pairs of samples run concurrently at LCW flow rates of 6.3 ml/s and 0.95 ml/s, shown in Figure 4, also incurred a linear weight loss with time. As evident in these plots, the high flow specimens show total weight losses 2% in excess of the low flow specimens while the rate of loss at both flow rates is nearly equal.

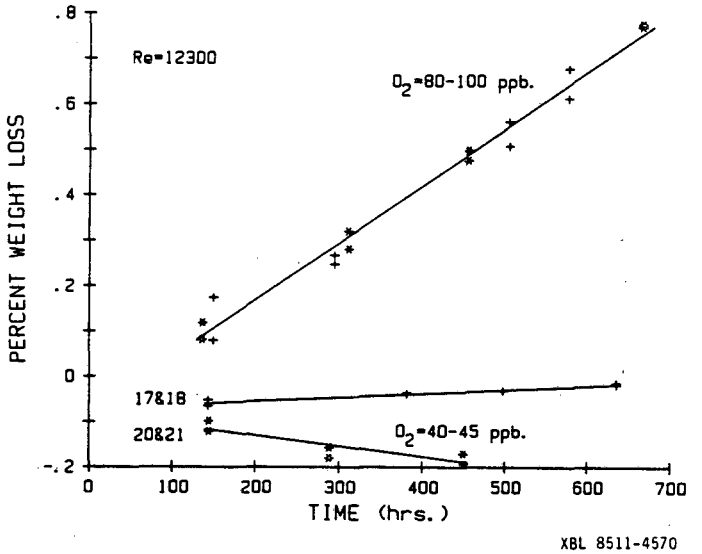

Figure 3 Weight loss as a function of time for oxygen concentration of 80-100 ppb and 40-45 ppb by weight.

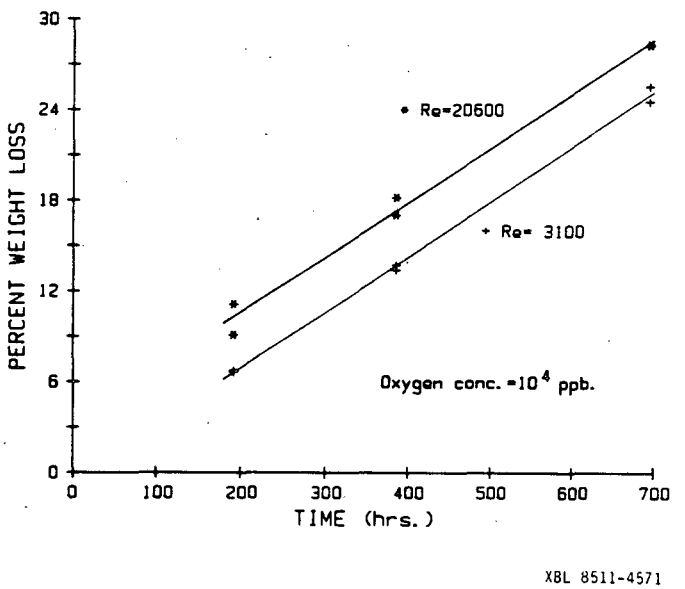

Figure 4 Weight loss as a function of time for Reynolds number flows of 3,100 and 20,600.

The time rate of weight change determined by the slope of the least squares fit to the data in Figures 2-4 is proportional to the change in wall thickness. Table 1 contains a summary of test conditions and the resultant rate of attack.

Table 1 Summary of Corrosion Tests on Molybdenum in Flowing Water

Test	Flow (ml/s)	Reynolds Number	Oxygen Concentration (ppb by weight)	Corrosion Rate (mm/yr)
1	38	12300	40-45	0.002*
2	38	12300	80-100	0.030
3	38	12300	~10,000	0.760
4	63	20600	~10,000	0.870
5	9.5	3100	~10,000	0.880

The Reynolds number of the flow appears to have little or no effect on the rate of attack. The discrepancy between the loss rate at Re = 12,300 and the higher and lower flow tests, at 10,000 ppb, indicate that other, uncontrolled, parameters play an important role. These parameters may include the pH, temperature and resistivity. Water temperatures varied between 10-30 °C over the duration of these tests. The conductivity of the laboratory LCW, supposed to be 1 micromho/cm or better, at times measured as high as 18 micromho/cm. These variations may also explain the discrepancies between the two sets of data at the 40-45 ppb level. The net weight gain of up to 0.2% in samples 20 and 21 can be explained by the formation of a 0.005 mm thick oxide layer. An adhering MnO_2 layer is commonly formed on Molybdenum exposed to air below 800°C.[4]

The foregoing tests show that the amount of dissolved oxygen has a profound effect on the rate of attack by water on molybdenum. The typical electrode wall thicknesses of 0.4 to 0.5 mm clearly precludes the use of air-saturated LCW. For practical lifetimes of LBL-type actively cooled accelerators, oxygen concentrations of <80 ppb and perhaps as low as 40 ppb should be maintained.

Acknowledgments

The author would like to express his appreciation to Jim Sullivan for obtaining the specimens used in these tests. Additional thanks are due Alan Paterson for his support and encouragement.

References

1. J. A. Paterson, et al., "The Mechanical Design of the Common Long Pulse Source for the Neutral Beam Systems of TFTR. Doublet III-D and MFTF-B presented at the 11th Symposium on Fusion Energy, Austin, Texas, November 18-22, 1985.

2. P. Purgalis, et al., "Mechanical Design and Fabrication of the Transverse Field Focusing (TFF) Matching/Pumping Section for Negative Ion Based Neutral Beam Systems," presented at the 11th Symposium on Fusion Engineering, Austin, Texas, November 18-22, 1985.

3. Digital Titrator Methods Manual. Hach Chemical Company Publication 18373-00, Colorado, 1979, pp. 47-50.

4. L. L. Shrier, Corrosion - Metal/Enviroment Reactions, Boston, Newnes-Butterworths, 1976, pp. 5:10-5:23.

This report was done with support from the Department of Energy. Any conclusions or opinions expressed in this report represent solely those of the author(s) and not necessarily those of The Regents of the University of California, the Lawrence Berkeley Laboratory or the Department of Energy.

Reference to a company or product name does not imply approval or recommendation of the product by the University of California or the U.S. Department of Energy to the exclusion of others that may be suitable.

LAWRENCE BERKELEY LABORATORY
TECHNICAL INFORMATION DEPARTMENT
UNIVERSITY OF CALIFORNIA
BERKELEY, CALIFORNIA 94720