LBL-19620
c.2

Lawrence Berkeley Laboratory
UNIVERSITY OF CALIFORNIA

Accelerator & Fusion Research Division

DOCUMENTS SECTION

Presented at the 1985 Particle Accelerator Conference, Vancouver, B.C., Canada, May 13-16, 1985

MBE-4, A HEAVY ION MULTIPLE-BEAM EXPERIMENT

R.T. Avery, C.S. Chavis, T.J. Fessenden, D.E. Gough, T.F. Henderson, D. Keefe, J.R. Meneghetti, C.D. Pike, D.L. Vanecek, and A.I. Warwick

May 1985

TWO-WEEK LOAN COPY
This is a Library Circulating Copy which may be borrowed for two weeks.

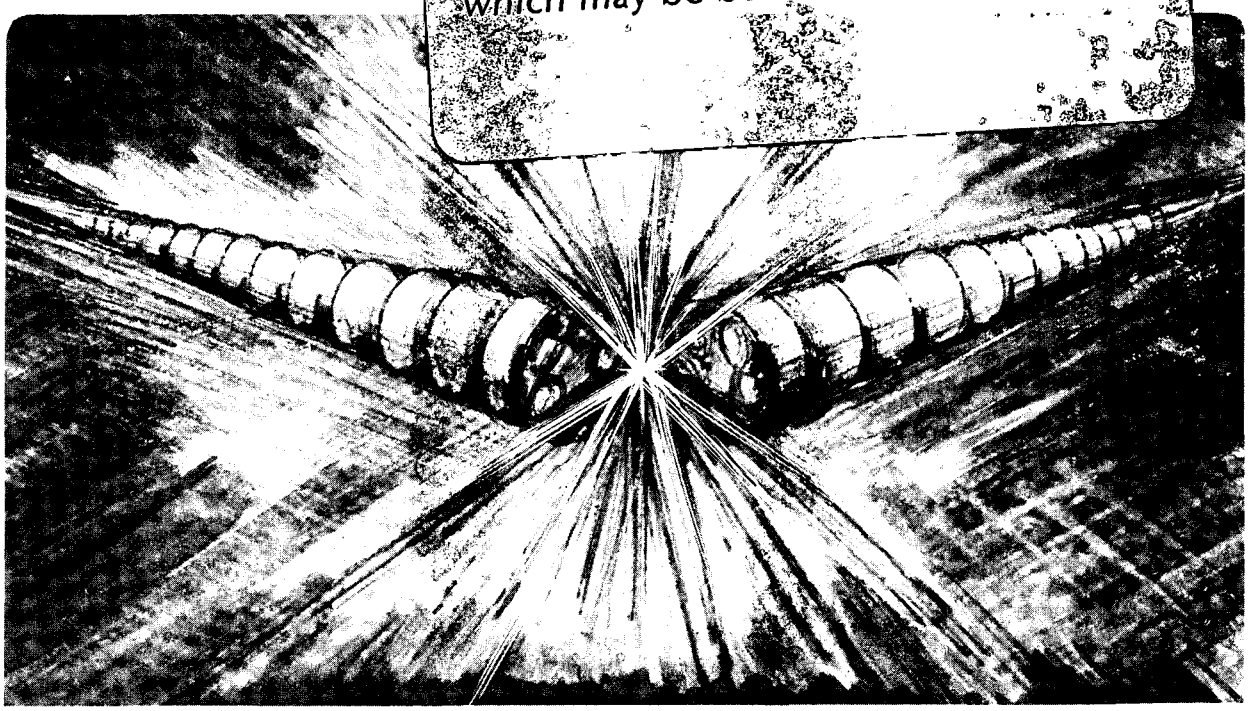

Prepared for the U.S. Department of Energy under Contract DE-AC03-76SF00098

LBL-19620
c.2

DISCLAIMER

This document was prepared as an account of work sponsored by the United States Government. While this document is believed to contain correct information, neither the United States Government nor any agency thereof, nor the Regents of the University of California, nor any of their employees, makes any warranty, express or implied, or assumes any legal responsibility for the accuracy, completeness, or usefulness of any information, apparatus, product, or process disclosed, or represents that its use would not infringe privately owned rights. Reference herein to any specific commercial product, process, or service by its trade name, trademark, manufacturer, or otherwise, does not necessarily constitute or imply its endorsement, recommendation, or favoring by the United States Government or any agency thereof, or the Regents of the University of California. The views and opinions of authors expressed herein do not necessarily state or reflect those of the United States Government or any agency thereof or the Regents of the University of California.

LBL-19620
HIFAN-280

MBE-4, A HEAVY ION MULTIPLE-BEAM EXPERIMENT*

R.T. Avery, C.S. Chavis, T.J. Fessenden, D.E. Gough, T.F. Henderson,
D. Keefe, J.R. Meneghetti, C.D. Pike, D.L. Vanecek and A.I. Warwick

Lawrence Berkeley Laboratory
University of California
Berkeley, CA 94720

May 1985

*This was supported by the Office of Energy Research, Office of Basic Energy Sciences, U.S. Department of Energy under Contract DE-AC03-76SF00098.

MBE-4, A HEAVY ION MULTIPLE-BEAM EXPERIMENT*

R.T. Avery, C.S. Chavis, T. J. Fessenden, D.E. Gough, T.F. Henderson,
D. Keefe, J.R. Meneghetti, C.D. Pike, D.L. Vanecek and A.I. Warwick
Lawrence Berkeley Laboratory,
University of California
Berkeley, California 94720

Summary

MBE-4, a heavy-ion multiple beam induction linac being built at LBL in FY85/86, will model many features of a much longer device. It will accelerate four space-charge-dominated Cesium ion beams from, for example, 0.2 MeV, 5 mA/beam, 3.0 μsec, 1.6 m length at injection to ~0.8 MeV, 15 mA/beam, 1.0 μsec, 1.1 m length at the exit. It will permit study of simultaneous focussing, acceleration, current amplification and emittance growth of multiple space-charge-dominated ion beams. Some features of this accelerator are described.

Introduction

The MBE-4 accelerator is being constructed at Lawrence Berkeley Laboratory as part of the U.S. program[1] for assessing linear induction accelerators as possible drivers for heavy ion inertial fusion. The MBE-4 experiment will provide valuable information on acceleration, current amplification, beam handling and control, and transverse and longitudinal emittance growth applicable to much larger ion linacs for pellet heating, such as the HTE[2]. MBE-4 can provide a wide range of output parameters of which a representative set of values is given below together with those for the much larger HTE.

Parameter	MBE-4	HTE
Number of Beams	4	16
Ions (charge +1)	Cesium	Sodium
Injection Voltage (MeV)	0.2	2.0
Injection Current/Beam (mA)	5-10	300
Injection Duration (μsec)	3.0	6.0
Final Voltage (MeV)	0.8	125
Final Current/Beam (mA)	15-30	6,000
Final Duration (μsec)	1.0	0.3
Current Amplification	3	20
Voltage Amplification	4	62
Length (meters)	16	450
Length/Injection Bunch Length	10	16

The MBE-4 apparatus is shown schematically in Figure 1 and described hereafter. It basically consists of an injector system to generate and condition four Cesium ion beams, accelerator sections incorporating 24 accelerating gaps in 30 focussing lattice periods, plus associated diagnostic, vacuum and control devices. MBE-4 and its experimental program are described further in other papers at this Conference[3-8] and in a separate report[9].

Experiments on injection have already been done[3]. Those with acceleration will start in the second half of 1985 and will continue intermittently through 1986 as successive segments of the accelerator are completed.

Injector System

The Injector System consists of a 200 kV Marx generator, four alumino-silicate emitters, a diode gap, collimating apertures, beam steering arrays, electrostatic quadrupoles for focussing and matching, beam diagnostic devices, a vacuum system, controls and monitoring. Four beams of low emittance have already been generated and characterized[3].

Precision Electrostatic Quadrupoles

Frequent electrostatic quadrupoles provide the focussing necessary to overcome the strong space-charge defocussing forces within the low-velocity heavy-ion beams. The interdigital configuration of each quadrupole and their arrangement into doublet units is shown in Figure 2. The beam aperture radius (also the clear radius to the electrodes) is 27.03 mm and the beam-to-beam spacing is 66.68 mm; dimensions selected after theoretical studies of quadrupole multipole components[5], image charge forces[6] and requirements to achieve longitudinal as well as transverse space-charge domination. The longitudinal lattice spacing of doublets is 457 mm. The arrays are nickel-plated aluminum fabricated to tolerances of less than 0.1 mm.

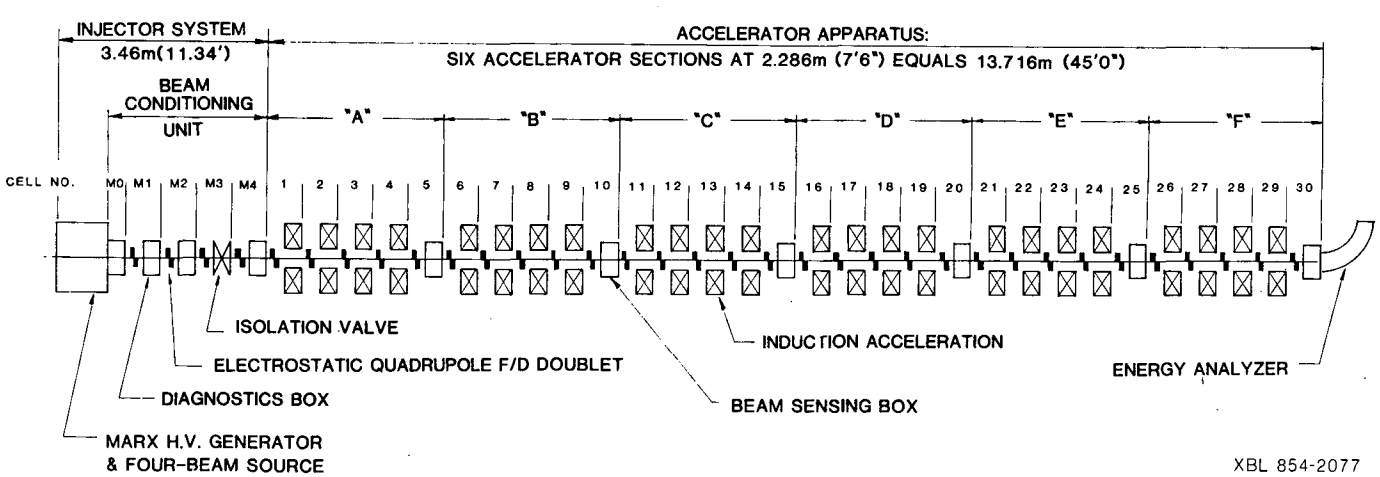

Figure 1. Diagrammatic Layout of MBE-4 Apparatus

*This work was supported by the Director, Office of Energy Research, Office of Basic Energy Sciences, U.S. Dept. of Energy, under Contract No. DE-AC03-76SF00098.

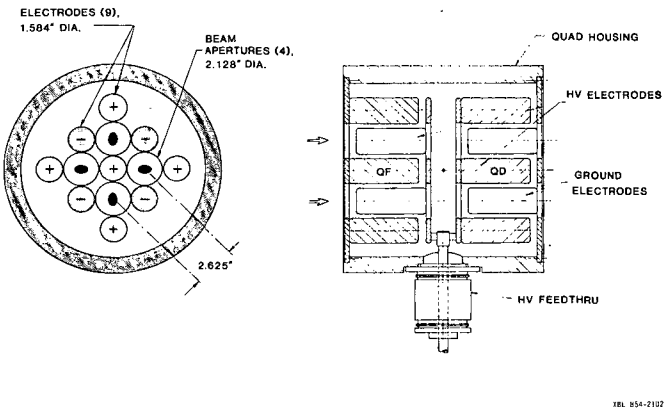

Figure 2. MBE-4 electrostatic quadrupole doublet focussing unit with "+" electrodes at ground potential and "-" electrodes at negative high voltage.

The focussing(F) and defocussing(D) quadrupoles of each of the first four doublets (M1-M4) are separately powered to permit matching from the sources to the entrance of the accelerator sections. Subsequent doublets have a single high-voltage feedthrough (to both F + D). A differential voltage of 15 kV is required at 0.2 MeV with proportionally higher voltages after each accelerating gap. Capacitive loading of each power supply output minimizes voltage change due to beam-induced charges on the electrodes.

Induction Acceleration

Each of the six accelerator sections contains five quadrupole doublets interspersed with four accelerating gaps, for a total of 24 gaps. The arrangement at one of these accelerating gaps is shown in Figure 3. Each gap has a vacuum-tight insulator assembly using Re-X glass-ceramic insulators with embedded stainless steel tubular inserts[7,10].

Induction cores surround each insulator assembly. Budgetary restraints dictate the use of on-hand core material, including 0.7 volt-sec of Astron Ni-Fe cores, 1.5 V-s of 3.25% Si steel cores and tape plus 0.2 V-s of Metglas[11] cores and tape.

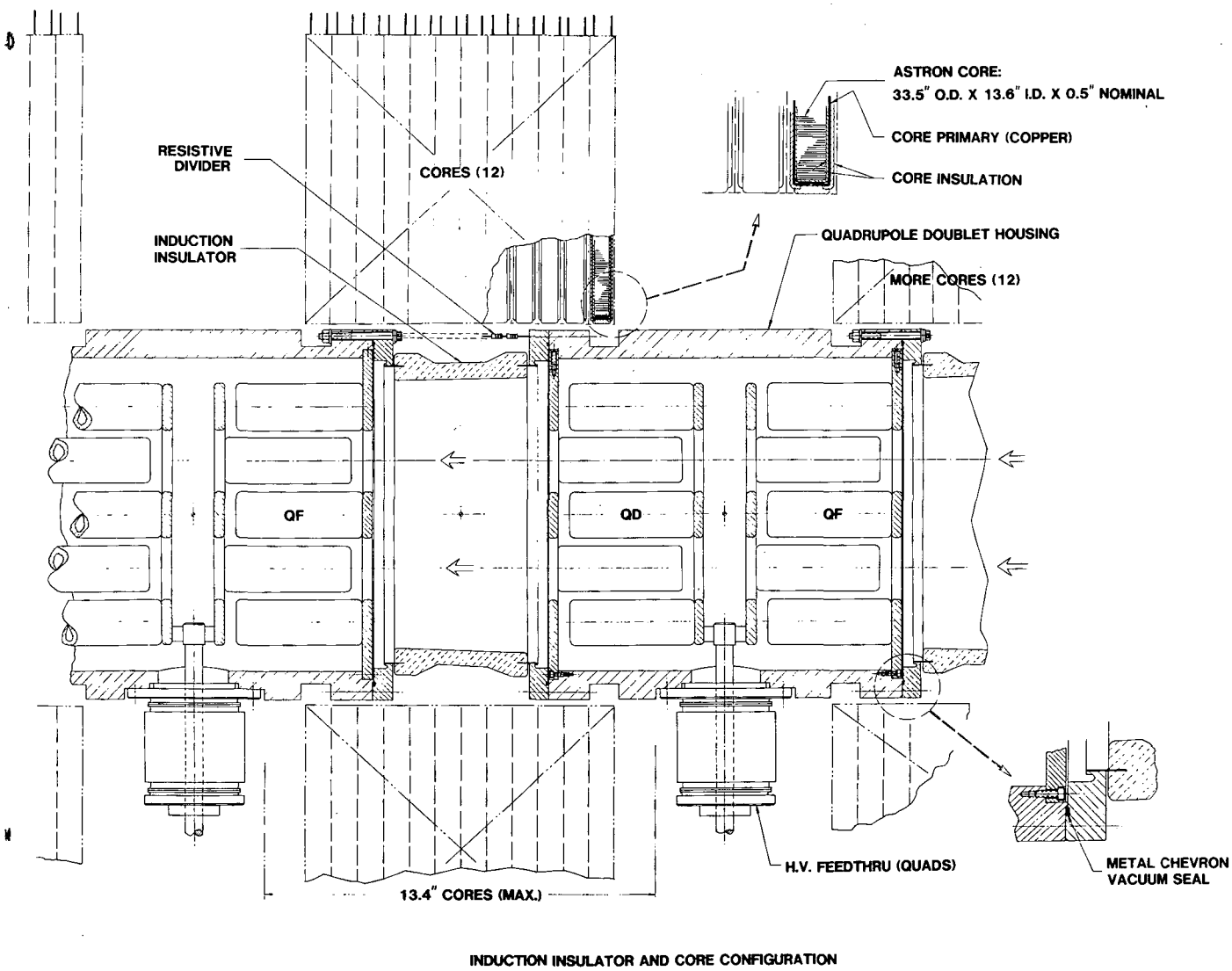

Figure 3. Cross-section of an MBE-4 accelerator section showing the glass-ceramic insulator and induction cores at one of 24 accelerating gaps interspersed between electrostatic quadrupole doublet units.

Two or more pulsers at each gap will provide special waveforms with up to 30 kV acceleration[8]. The applied voltages must not only accelerate the ion beams but must also accelerate the tail more than the head of the beam bunch in order to achieve current amplification. The waveforms must also be "smooth" to avoid longitudinal emittance growth. Separate short-duration voltage pulses timed with the passage of both head and tail of the beam bunch will counteract longitudinal spreading of the beam bunch due to space charge. A timing system provides individual adjustable timing of pulsers to 10 ns resolution with provision for triggering of each pulser either from the master timer or from a preceding trigger of another pulser.

Diagnostics

Diagnostic boxes M0, M1, M2 and M4 are located in the matching section and boxes #5, 10, 15, 20, 25 and 30 are located at the end of each accelerator section so that the performance of the ion beams can be measured. A four-beam Faraday cup array can be inserted into the beams to measure current. Four-beam wire "harp" arrays in conjunction with a track/hold monitoring system permit measurement of profiles and positions, both vertical and horizontal, of the four beams. Movable slits with detectors can be used to measure vertical and horizontal emittance of the four beams as well as local current densities within the beams. These devices can be located as needed in any of the four ports of any diagnostic box (see Figure 4). An energy analyzer at the exit can measure beam energy (voltage) versus time for one of the four beams. Several of these devices were used for the initial measurements[3].

Miscellaneous

Vacuum in the 10^{-7} Torr range is provided by cryopumps and turbopumps. MBE-4 is supported on rigid stands and will be laser aligned to 0.1 mm accuracy. Controls and monitoring, which provide for computerized upgrading, are located in nearby racks.

Acknowledgements

We wish to acknowledge all of the LBL HIFAR staff members for their contributions to the MBE-4 program.

References

[1] J.E. Leiss and T.F. Godlove, "U.S. Accelerator Research for Heavy Ion Fusion," Proceedings of the 1984 INS Intl. Symposium on Heavy Ion Accelerators and their Applications to Inertial Fusion, Inst. for Nucl. Studies, Tokyo, Japan, 31 (1984).

[2] T.J. Fessenden, "Induction Linacs for Heavy Ion Fusion Research," Proc. 1984 Linear Accel. Conf., GSI-Darmstadt Report GSI-84-11 (1984).

[3] A.I. Warwick, D. Vanecek and O.K. Fredriksson, "A Four Beam Cesium Injector for MBE-4," elsewhere in these Proceedings.

[4] D. Keefe, "Developments in Accelerators for Heavy Ion Fusion," elsewhere in these Proceedings.

[5] C.M. Celata, V. Brady, I. Haber, L.J. Laslett and L. Smith, "The Effect of Focusing Field Nonlinearities in MBE-4 on Transverse Beam Dynamics," elsewhere in these Proceedings.

[6] C.M. Celata, I. Haber, L.J.Laslett, L. Smith and M.G. Tiefenback, "The Effect of Induced Charge at Boundaries on Transverse Dynamics of a Space-Charge-Dominated Beam," elsewhere in these Proceedings.

[7] A. Faltens and S. Rosenblum, "Investigation of Re-X Glass Ceramic for Accelerator Insulating Columns," elsewhere in these Proceedings.

[8] C. Kim, V.O. Brady, T.J. Fessenden, L.J.Laslett, D. Judd and L. Smith, "Synthesis of MBE-4 Accelerating Waveforms," elsewhere in these Proceedings.

[9] R.T. Avery (for HIFAR Group), "Program Plan for the MBE-4 Multiple Beam Experiment," Lawrence Berkeley Laboratory Report LBL-19592 (1985).

[10] Re-X is a trademark of General Electric Co.

[11] MetGlas is a trademark of Allied Corp.

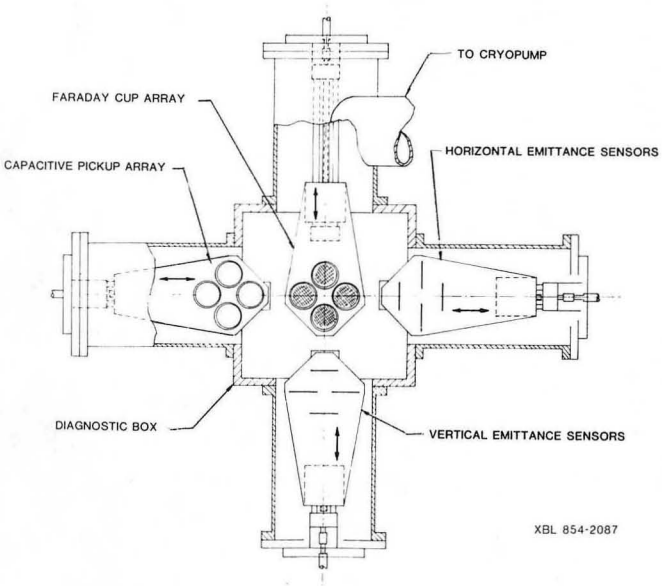

Figure 4. Cross section of an MBE-4 diagnostic box with four diagnositc devices installed. Devices can be moved to other ports or boxes according to needs.

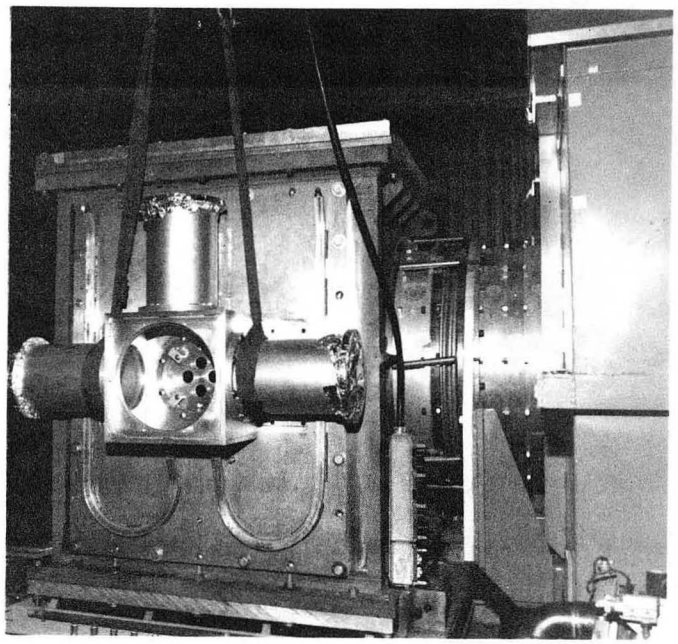

Figure 5. Photo in January 1985 of preparations for first tests. The 200 kV Marx tank is on the extreme right, the large four-beam source tank at the left rear with diagnostic box M0 being installed. The four holes for the ion beams can be seen in Box M0.

This report was done with support from the Department of Energy. Any conclusions or opinions expressed in this report represent solely those of the author(s) and not necessarily those of The Regents of the University of California, the Lawrence Berkeley Laboratory or the Department of Energy.

Reference to a company or product name does not imply approval or recommendation of the product by the University of California or the U.S. Department of Energy to the exclusion of others that may be suitable.

LAWRENCE BERKELEY LABORATORY
TECHNICAL INFORMATION DEPARTMENT
UNIVERSITY OF CALIFORNIA
BERKELEY, CALIFORNIA 94720