LBL-20002
c.2

Lawrence Berkeley Laboratory
UNIVERSITY OF CALIFORNIA

RECEIVED
LAWRENCE
BERKELEY LABORATORY

APPLIED SCIENCE DIVISION

JUN 1 8 1986

LIBRARY AND
DOCUMENTS SECTION

Presented at the ASME Solar Energy Division
Conference, Anaheim, CA, April 14-17, 1986

PERFORMANCE COMPARISON OF ABSORPTION AND DESICCANT SOLAR COOLING SYSTEMS

M.L. Warren and M. Wahlig

January 1986

TWO-WEEK LOAN COPY
This is a Library Circulating Copy
which may be borrowed for two weeks.

APPLIED SCIENCE
DIVISION

LBL-20002
c.2

Prepared for the U.S. Department of Energy under Contract DE-AC03-76SF00098

DISCLAIMER

This document was prepared as an account of work sponsored by the United States Government. While this document is believed to contain correct information, neither the United States Government nor any agency thereof, nor the Regents of the University of California, nor any of their employees, makes any warranty, express or implied, or assumes any legal responsibility for the accuracy, completeness, or usefulness of any information, apparatus, product, or process disclosed, or represents that its use would not infringe privately owned rights. Reference herein to any specific commercial product, process, or service by its trade name, trademark, manufacturer, or otherwise, does not necessarily constitute or imply its endorsement, recommendation, or favoring by the United States Government or any agency thereof, or the Regents of the University of California. The views and opinions of authors expressed herein do not necessarily state or reflect those of the United States Government or any agency thereof or the Regents of the University of California.

LBL-20002

Performance Comparison of Absorption and Desiccant Solar Cooling Systems.

Mashuri L. Warren and Michael Wahlig

Applied Science Division
Lawrence Berkeley Laboratory
University of California
Berkeley, CA 94720

ABSTRACT

Cooling systems are required to operate over a wide range of outdoor and load conditions; however, the performance of solar cooling components is often specified and compared at a typical design point such as ARI conditions. A method is presented to directly compare the performance of different desiccant and absorption cooling systems by using psychrometric analysis of air distribution cycles under a range of outdoor conditions that systems encounter over a year. Using analysis of cooling load distributions for a small commercial office building in Miami and Phoenix a seasonal COP is calculated for each system. The heat input can be provided by solar or by an auxiliary heat source, such as natural gas.

To the extent possible, cooling systems take advantage of the ability to reject heat directly to the atmosphere. Desiccant systems obtain their cooling effect from evaporative cooling and heat exchange. Advanced absorption cooling technology offers the possibility of chillers with COP's of 1.55 or greater. When evaporative cooling and heat exchange components are added to an advanced absorption cooling system, the performance is enhanced further. Advanced techniques of heat exchange and evaporative cooling that benefit desiccant systems will give a similar benefit to absorption systems.

Results of analysis show that the system COP of advanced absorption systems with heat exchange and evaporative cooling is much larger than that of the ventilation mode desiccant system at low outdoor humidities. In Miami with its humid climate the seasonal COP of both systems is about 1.2. In Phoenix with its dry climate the seasonal COP for the advanced absorption system is 2.36, while for the desiccant system it is only 1.35.

This work was supported by the Assistant Secretary for Conservation and Renewable Energy, Office of Solar Heat Technologies, Active Heating and Cooling Division of the U.S. Department of Energy under Contract No. DE-AC03-76SF00098.

LBL-20002

Performance Comparison of Absorption and Desiccant Solar Cooling Systems.

Mashuri L. Warren and Michael Wahlig

Applied Science Division
Lawrence Berkeley Laboratory
University of California
Berkeley, CA 94720

INTRODUCTION

There has been much discussion over the past few years of the relative merits of desiccant cooling systems compared to solar driven refrigerant cooling systems such as advanced closed cycle absorption. The thermal performance of solar cooling components is often specified and compared at a single typical design point, such as ARI conditions. Building air conditioning systems are required to operate over a wide range of outdoor and load conditions. It is important to compare the performance of both desiccant and advanced absorption systems over a range of outdoor conditions that real cooling systems encounter over a year. In this paper a method is presented to directly compare the performance of ventilation mode open cycle desiccant system with an advanced absorption cooling systems by using psychrometric analysis of air distribution cycles under a range of outdoor conditions. Based on this analysis, the seasonal energy input requirement for the different systems can be estimated. In this paper we shall address only comparison of the thermal performance. Complete comparison of the systems would also require evaluation of the electrical fan and pumping energy performance.

To the extent possible, all cooling systems take advantage of the ability to reject heat directly to the atmosphere. Desiccant systems obtain their cooling effect from evaporative cooling and heat exchange. The advanced cycle desiccant systems have improved heat rejection capabilities. Advanced absorption cooling technology offers the possibility of chillers with thermal COP's of 1.55 or greater at design conditions. When evaporative cooling and heat exchange components are added to an advanced absorption cooling system, the performance is enhanced further.

System coefficient of performance, system COP, the ratio of cooling effect delivered to heat input to regenerate the device, is calculated under different operating conditions. The heat input can be provided by solar or an auxiliary heat source (natural gas). The system coefficient of performance can be directly compared for different types of systems over the range of outdoor conditions relevant to the particular application.

ANALYSIS OF A DESICCANT SYSTEM

The Solar Energy Research Institute has done considerable work on the evaluation of advanced open cycle solid desiccant system.[1,2] In the past 10 years research efforts have doubled the predicted coefficient of performance of desiccant cooling cycles to 1.2. In the ventilation mode desiccant cooling cycle, shown in Figure 1, the inlet air stream is dried and cooled. The supply air temperature is further reduced by evaporative cooling. The modeling of the ventilation mode desiccant cooling system presented here follows the method developed by Jurinak and others [3,4] at the University of Wisconsin. The steady state heat and mass transfer of the desiccant wheel is modeled by analogy with heat transfer processes using heat and mass transfer effectivenesses.

Figure 1 shows a schematic of the ventilation mode desiccant cooling system. The outside air (1) is dried in passing through the rotary dehumidifier wheel (2). The air stream is then cooled (3) by heat exchange with the exhaust air stream (6). As needed the incoming air (3) is evaporatively cooled to the supply air state (4).

In this example the return air (5) is assumed to be at the ARI return air conditions: Tdb = 26.7 ^{o}C (80 ^{o}F); Twb = 19.2 ^{o}C (66.6 ^{o}F); RH = 50 %; and W = 0.0110 kg/kg dry air. The return air stream is evaporatively cooled (6) and heated by exchange with the incoming air stream (7). The exhaust stream is then heated to the necessary regeneration temperature (8) either by solar energy or by a gas flame. The exhaust stream (9) carries heat and moisture from the desiccant wheel.

Psychrometric analysis of the cycle has been carried out for a variety of inlet conditions. The following component effectivenesses have been assumed: the air-to-air heat exchanger, 0.95; the evaporative cooling, 0.98; and the desiccant wheel, 0.08 and 0.95. Figure 2 shows the psychrometric states for a cycle assuming ARI outdoor conditions: Tdb = 35.0 ^{o}C (95.0 ^{o}F); Twb = 25.0 ^{o}C (77.0 ^{o}F); RH = 40 %; and W = 0.0142 kg/kg dry air. The states for this cycle at ARI outdoor conditions are listed in Table 1.

The cooling effect delivered is the difference between the enthalpy of the room (5) and of the Supply air (4), HCOOL = 19.34 kJ/kg. The thermal energy required to drive the system is the difference between the enthalpy leaving the heat exchanger (7) and that leaving the heat source. Both moisture and heat are rejected from the desiccant wheel. The airflow on the regenerating side can be reduced by about 15% and still carry off the required moisture and heat. This reduces the heat input required to maintain the regeneration temperature of 80°C to HHEAT = 16.24kJ/kg and improves the overall thermal performance of the system. The system thermal coefficient of performance is the ratio of the cooling effect delivered to the heat input required.

$$COP_{desic} = \frac{HCOOL}{HHEAT} = 1.19$$

Table 1. States of the ventilation desiccant cooling cycle at ARI conditions.

Item	number	temperature (C)	humidity kg/kg-air	enthalpy kJ/kg-air
Outdoor air	1	35.0	0.0142	71.4
Dehumidified	2	57.4	0.0054	77.7
heat exchanged	3	21.6	0.0054	35.4
Supply	4	15.0	0.0091	35.4
Return	5	26.7	0.0110	54.7
Evap cooled	6	19.5	0.0140	55.0
heat exchange	7	55.5	0.0140	97.9
heat source	8	80.0	0.0140	117.1
exhaust	9	50.5	0.0215	111.8

In order to maintain a relatively constant sensible heat ratio, SHR (the ratio of sensible to total cooling), it is necessary to control the regeneration temperature and the effectiveness of the final evaporative cooling device. The moisture addition to the space can be regulated by controlling the final stage evaporative cooling device to maintain a sensible heat ratio of SHR = 0.75. The evaporative cooler is modeled as an approach to the wet-bulb conditions.

For this simple analysis, the regeneration temperature is controlled to maintain the humidity of the dehumidified air (3) between 0.008 and 0.005 kg/kg dry air. If this humidity is too high, then it is difficult to maintain adequate latent cooling. If this humidity is too low, then excessive dehumidification takes place at the cost of additional heat input, and the system COP is reduced.

In desiccant systems, there is a trade off between the performance that is attained at lower regeneration temperatures and the amount of cooling that can be obtained per unit of air moved through the system. Table 2. shows the humidity ratio after the drying wheel (2), the cooling effect per kilogram of air, HCOOL, and the system COP as a function of regeneration temperature for ARI conditions. As the regeneration temperature is decreased the system COP improves by about 2 %, however the amount of cooling delivered per unit of air delivered falls by about 40 %. Depending on the electrical fan power requirements, to move considerably more air at the lower regeneration temperatures would probably penalize the electrical performance of the system and dictate the use of the higher regeneration temperature.

Table 2 Effect of changing regeneration temperature on thermal performance of a ventilation mode desiccant system at ARI outdoor conditions.

TREGEN °C	W(2) kg/kg-air	HCOOL kJ/kg	syscop -
80	0.0054	19.3	1.191
75	0.0062	17.6	1.205
70	0.0060	15.7	1.214
65	0.0078	13.6	1.215
60	0.0088	11.4	1.204

Thermal System COP.

The thermal system COP for a ventilation mode desiccant system is shown in Table 3 over the full range of outdoor temperature and humidity that could be encountered. The dashes in the table indicate that the humidity is above the saturation line. The values are calculated at the midpoint of 5 °C temperature bins and 0.002 kg/kg-air humidity bins starting at 0.001 kg/kg-air. The regeneration temperature for the desiccant bed is controlled between 60 °C and 100 °C based on the humidity of the air leaving the dehumidifier. The final stage of evaporative cooling is controlled to give a sensible heat ratio of 0.75.

Table 3. Bin distribution of system COP for a ventilation mode desiccant cooling system.

W(kg/kg)	Desiccant System COP						
0.022	-	-	-	0.983	0.944	0.896	0.863
0.020	-	-	-	1.053	1.004	0.965	0.919
0.018	-	-	1.000	1.125	1.078	1.030	0.992
0.016	-	-	1.225	1.202	1.157	1.111	1.064
0.014	-	1.300	1.301	1.263	1.241	1.196	1.151
0.012	-	1.591	1.456	1.347	1.308	1.284	1.237
0.010	-	1.670	1.612	1.438	1.338	1.303	1.228
0.008	1.669	1.701	1.694	1.581	1.422	1.337	1.306
0.006	1.636	1.691	1.720	1.678	1.568	1.418	1.339
0.004	1.583	1.649	1.701	1.729	1.657	1.413	1.394
0.002	1.519	1.584	1.647	1.697	1.653	1.540	1.377
Temp (°C)	12.5	17.5	22.5	27.5	32.5	37.5	42.5

ANALYSIS OF AN ADVANCED ABSORPTION COOLING SYSTEM

Because of the good match between the availability of solar radiation and the summer cooling loads, the Active Solar Cooling Program has pursued the development and application of heat driven cooling technology. Early applications of single effect absorption cooling machines with a thermal COP of 0.7 indicated that while the technology was feasible, the costs of the collectors and cooling equipment and the penalty in electric power to reject heat from the system made the systems economically unattractive. Advanced absorption cooling technology offers the possibility of chillers with COP's of 1.55 or greater [5] at firing temperatures of 115 °C (240 °F), which reduces the collector area and the heat rejection requirements. Such advanced chillers in a gas fired mode may also be competitive with electrically drive vapor compression chillers. When evaporative cooling and heat exchange components are added to an advanced absorption cooling system, the performance is enhanced further. To give a fair comparison with desiccant systems, the advanced absorption system is modeled assuming a generator temperature of only 80 °C (176 °F).

The advanced absorption cooling system is modeled including evaporative cooling, air to air heat exchanger, economizer cycle, and an evaporatively cooled condenser as shown in Figure 3. An air to air heat exchanger transfers heat from the outside air stream (1) to the exhaust air stream (7). The cooled inlet air (2) is then mixed with return air from the room (5) based on a ratio of outdoor air, ROA , to determine the conditions of the mixed air (3) to the coil. The ratio of outdoor air to return air is based

on an enthalpy economizer cycle. If the room return air(5) enthalpy is less than that of the cooled inlet air (2), then the ratio of outdoor air is a minimum, ROA = 0.25. Otherwise 100 % outdoor air is used, ROA = 1.0. The coil cools the air to the supply air state (4).

The room return state (5) is assumed to be ARI conditions, as in the desiccant case. The room return air is evaporatively cooled (6). If the enthalpy of the outdoor air is less than that of the room return air then the outdoor air (rather than the room return air) is evaporatively cooled (6a). The output from the evaporative cooler is used in a sensible heat exchanger to cool the inlet air stream. The warm moist air stream (7) is exhausted. If the temperature output from the evaporative cooler (6 or 6a) is less than the dewpoint of the inlet air state (1) then condensation will occur in the heat exchanger. Outdoor air is also evaporatively cooled to cool the chiller condenser.

Figure 4 shows the psychrometric cycle for an advanced absorption system operating at ARI outdoor conditions. Table 4 lists the states for this cycle at ARI outdoor air conditions. The cooling required across the coil is the difference between the enthalpy of the mixed air, (3), and of the supply air (4), HCOIL = 25.72 kJ/kg. The cooling effect delivered is the difference between the enthalpy of the room (5) and of the supply air (4), HCOOL = 25.33 kJ/kg. The thermal energy required to drive the system is determined by the thermal coefficient of performance of the advanced solar fired absorption chiller operating at a 7.2 ^{o}C chilled water temperature and at a condenser temperature given by the approach to the outdoor wet bulb temperature.

Table 4. States of the advanced absorption cooling cycle with return air evaporative cooling and air to air heat exchange.

Item	number	temperature ^{o}C	humidity kg/kg-air	enthalpy kJ/kg-air
Outdoor air	1	35.0	0.0142	71.4
Heat exchange	2	20.2	0.0142	56.3
mixed air	3	25.1	0.0118	55.1
Supply	4	10.5	0.0075	29.4
Return air	5	26.7	0.0110	54.7
Evap cooled	6	19.5	0.0141	55.0
heat exchange	7	34.2	0.0141	70.1

System Effectiveness.

For a system with a cooling coil, the system effectiveness can be defined as the ratio of the cooling effect delivered to the room to the enthalpy change across the coil.

$$\eta_{system} = \frac{\text{HCOOL}}{\text{HCOIL}} = 0.985$$

The application of heat exchange and evaporative cooling can greatly increase the system effectiveness, η_{system}. This improves the overall cooling effect delivered per unit of heat required. Using this same model four different systems can be considered: 1) Eliminating heat exchange, HX1, and evaporative cooling of the return air, EC1, gives us a normal economizer cycle; 2) Including the return air heat exchanger, HX1, but without evaporative cooling gives us a heat recovery cycle; 3) Including the return air heat

exchanger, HX1, and evaporative cooling of return air, EC1, gives the configuration shown in Figure 3; and 4) Including the return air heat exchanger, HX1, and evaporative cooling of the outdoor air gives us indirect evaporative cooling.

Where appropriate the same component effectivenesses are used in both desiccant and absorption analysis. The air to air heat exchanger is modeled with a heat exchanger effectiveness of EFFHX = 0.95. The evaporative cooling uses an effectiveness, EFFEC = 0.98. The cooling coil is modeled as a four row chilled water coil with an entering chilled water temperature of 7.2 °C (45 °F) using the algorithm suggested by ASHRAE [6]. When excessive latent cooling is produced by the system, the chilled water temperature was set upward to a maximum of 12.8 °C (55 °F). The final configuration uses either return air or outdoor air evaporative cooling as the input to the heat exchanger (6) depending on which has the lower enthalpy.

Thermal Chiller COP

The chiller is modeled as an absorption chiller that can achieve a certain percentage of Carnot where the performance depends on the chilled water temperature, and condenser conditions. Previous analysis has shown that it is in principle possible to achieve up to 70 % of the Carnot efficiency for an advanced solar fired absorption chiller operating at a temperature of 70 °C (160 °F) to 140 °C (280 °F). [5] As we are considering the ultimate performance of such systems, we have assumed an efficiency of 0.70 of Carnot for the absorption chillers. We have assumed that the water cooled condenser temperature is 5.0 °C higher than an 85 % approach to ambient wet bulb conditions. We have assumed that the evaporator temperature is 5.0 °C lower than the chilled water temperature. With these assumptions at ARI conditions the chiller COP is 0.949. The thermal COP of the absorption chiller gives the ratio of the cooling coil load, HCOIL, to the heat input to the chiller, HHEAT.

$$\mathrm{COP}_{abs} = \frac{\mathrm{HCOIL}}{\mathrm{HHEAT}} = 0.949$$

Thermal System COP

For a thermally fired system, the system thermal coefficient of performance is the ratio of the cooling effect delivered, HCOOL, to the heat input required, HHEAT. It is equal to the product of the chiller COP times the system effectiveness.

$$\mathrm{COP}_{system} = \frac{\mathrm{HCOOL}}{\mathrm{HHEAT}} = \mathrm{COP}_{abs} \times \eta_{system} = 0.934$$

The performance of these different absorption system configurations is compared at ARI conditions in Table 5. Evaporative cooling of the return air is the best of the advanced absorption system configurations. It should be noted that the performance of the absorption system would increase rapidly with increasing generator temperature, while an increase in regeneration temperature of the desiccant system would have little effect on its performance.

Table 5. Comparison of performance of various configuration Absorption Systems at ARI conditions: Outdoor air- 35 C (95 F) 0.0142 kg/kg-air; and Return air- 26.7 C (85 F) 0.0110 kg/kg-air.

System	T_{cw} (°C)	T_{gen} (°C)	HCOOL kJ/kg	η sys	COPabs	COPsys	SHR
Absorption systems							
1. Economizer	7.2	80.0	24.36	0.854	0.949	0.810	0.656
2. Heat Recovery	7.2	80.0	24.89	0.921	0.949	0.873	0.652
3. Evap Cool RA	7.2	80.0	25.33	0.985	0.949	0.934	0.648
3. Evap Cool RA	10.0	80.0	19.94	0.981	1.063	1.043	0.709
3. Evap Cool RA	12.8	80.0	14.62	0.974	1.205	1.174	0.826

The sensible heat ratio, SHR, for chilled water temperature of 7.2 °C (45 °F) is less than 0.75, which indicates that excessive latent cooling is being done. By raising the chilled water temperature, the latent cooling is reduced and the performance of the chiller is improved. As the chilled water temperature is increased from 7.2 °C to 12.8 °C (45 °F to 55 °F), the sensible heat ratio increases from 0.648 to 0.826 and the system COP increases from 0.934 to 1.174.

The system COP for an advanced absorption system with return air evaporative cooling and heat exchange is shown in Table 6 over the full range of outdoor conditions. This system can make full advantage of the cooling capabilities of dry outdoor air. The system assumes a sensible heat ratio of about 0.75. The chilled water temperature is raised in increments of 2.5 °C to increase the sensible heat ratio when excessive latent cooling would otherwise be done.

Table 6. Bin distribution of system COP for an advanced absorption system operating at 80 °C with return air evaporative cooling and heat exchange.

W(kg/kg)	Advanced absorption system COP						
0.022	-	-	-	0.770	0.695	0.629	0.576
0.020	-	-	-	0.864	0.777	0.701	0.636
0.018	-	-	1.000	0.976	0.872	0.785	0.710
0.016	-	-	1.257	1.108	0.985	0.882	0.795
0.014	-	1.500	1..449	1.267	1.120	0.998	0.896
0.012	-	3.388	2.440	1.971	1.693	1.470	1.289
0.010	-	10.446	6.408	4.126	3.251	2.755	2.363
0.008	38.449	28.468	14.344	8.853	5.439	4.320	3.654
0.006	38.166	28.790	21.537	16.119	9.557	6.033	4.909
0.004	60.455	39.794	30.600	23.012	17.595	10.028	6.480
0.002	114.345	58.184	40.467	32.070	24.160	17.907	10.323
Temp (°C)	12.5	17.5	22.5	27.5	32.5	37.5	42.5

INDIRECT EVAPORATIVE COOLING

At low outside humidities indirect evaporative cooling can be an effective method of cooling. For this reason simulations were run using the evaporative cooling heat exchange, both with and without a desiccant wheel operating as a total enthalpy exchanger without a heat source for regeneration. Results of this analysis indicate that indirect evaporative cooling using either outdoor or return air is most effective. The use of the desiccant wheel does not improve the performance because moisture is transferred from the exhaust air to the inlet air streams.

Table 7 shows the available indirect evaporative cooling using either return air or outdoor air for a full range of outdoor conditions. For outdoor humidities less than 0.010 kg/kg-air, significant total cooling greater than 10 kJ/kg-air can be obtained. For outdoor humidities less than 0.007kg/kg-air, a cooling effect greater than 20kJ/kg-air can be obtained, except at high outdoor dry bulb temperatures. For the purposes of this assessment, we assume that below outdoor humidity of 0.007 kg/kg-air, that all cooling is done by indirect evaporative cooling, both for ventilation mode desiccant and advanced absorption cooling systems. A more thorough analysis of evaporative cooling would require evaluation of fan and pumping power requirements to provide the cooling.

Table 7. Bin distribution of indirect evaporative cooling with either outdoor or return air.

W(kg/kg)	Indirect Evaporative Cooling (kJ/kg-air)						
0.022	-	-	-	0	0	0	0
0.020	-	-	-	0	0	0	0
0.018	-	-	-	0	0	0	0
0.016	-	-	0	0	0	0	0
0.014	-	-	0	0	0	0	0
0.012	-	7.263	5.318	4.437	4.181	3.926	3.670
0.010	-	13.959	11.922	9.988	9.256	9.001	8,747
0.008	23.030	20.762	18.621	16.595	14.672	14.077	13.823
0.006	30.081	27.684	25.427	23.297	21.282	19.369	18.900
0.004	37.285	34.742	32.355	30.109	27.989	25.983	24.079
0.002	44.659	41.954	39.421	37.043	34.806	32.695	30.698
Temp (^{o}C)	12.5	17.5	22.5	27.5	32.5	37.5	42.5

COOLING LOADS

Building cooling loads, calculated for a typical 930 m^2 (10,000 ft^2) office building using DOE2 [7] have been analyzed. The hourly systems output file from DOE2 has been combined with the weather file to create a loads file with temperature, humidity, and heating and cooling loads for each of the 8760 hours of annual building operation. The hours of operation and the cooling loads are binned against outdoor temperature and humidity ratio to establish the annual range of operating conditions for the cooling system. By knowing the annual distribution of cooling loads encountered by the system over the year, and the system COP over the range of operating conditions, the heat input requirement can be calculated as a measure of annual system performance.

Tables 8 & 9 show the distribution of cooling loads for a light commercial building in Phoenix and Miami. In Phoenix the bulk of the cooling load occurs with humidities

less than 0.012 kg/kg-air, but with dry bulb temperatures as high as 40 °C. Miami has significant humid weather with the humidity ratio from 0.010 to 0.020, but with temperatures typically 24 to 32 °C.

Table 8. Bin distribution of cooling loads in MJ for a light commercial building in Miami.

W(kg/kg)	Miami Cooling Loads (MJ)						
0.022	-	-	-	323	280	0	0
0.020	-	-	-	37485	18991	0	0
0.018	-	-	20823	89809	60113	0	0
0.016	-	-	28277	50240	32049	0	0
0.014	-	406	23431	60669	8124	0	0
0.012	-	2480	17349	30407	1721	0	0
0.010	0	965	11109	10013	332	0	0
0.008	5	691	8621	2132	0	0	0
0.006	17	700	1455	437	0	0	0
0.004	18	383	373	0	0	0	0
0.002	5	184	187	0	0	0	0
Temp (°C)	12.5	17.5	22.5	27.5	32.5	37.5	42.5

Table 9. Bin distribution of cooling loads in MJ for a light commercial building in Phoenix.

W(kg/kg)	Phoenix Cooling Loads (MJ)						
0.022	-	-	-	0	0	0	0
0.020	-	-	-	0	0	0	0
0.018	-	-	0	0	0	0	0
0.016	-	-	0	4462	548	0	0
0.014	-	0	1904	7517	8035	1854	0
0.012	-	197	941	11697	18450	15411	2725
0.010	8	708	2136	4822	9541	17766	5774
0.008	22	915	5343	13529	15403	22074	7583
0.006	15	2461	11677	16399	21897	17545	5633
0.004	144	4216	12321	21972	17702	9976	3121
0.002	25	1993	5371	7590	5458	1542	0
Temp (°C)	12.5	17.5	22.5	27.5	32.5	37.5	42.5

COMPARISON OF ABSORPTION AND DESICCANT SYSTEMS

The annual heat input can be estimated by dividing the system COP into the cooling load for each bin and summing over all temperature and humidity bins. The annual results for the two systems in Miami and Phoenix are summarized in Table 10.

Almost all (99%) of the cooling load is Miami occurs at humidities greater than 0.007 kg/kg-air. The seasonal COP for the ventilation desiccant system is 1.19. There are significant loads at humidities above 0.0140 kg/kg-air, where the performance falls off. The advanced absorption system has a seasonal system COP of 1.12, which is slightly better than the design point system COP. In Miami, the thermal performance of

the two systems are similar.

In Phoenix, only 52% of the cooling load occurs at humidities greater than 0.007 kg/kg-air. Below this humidity level the entire cooling load can be met with indirect evaporative cooling without the use of the dehumidifier wheel. The seasonal COP for the ventilation mode desiccant system for humidities greater than 0.007 kg/kg-air is 1.35. The seasonal COP for the advanced absorption system is 2.36. In the humidity range from 0.012 to 0.008 kg/kg-air, which contains the bulk of the cooling load, the evaporatively cooled, advanced absorption system outperforms the desiccant system.

Table 10. Estimated annual energy usage for ventilation mode open cycle desiccant system, and for advanced absorption with return air evaporative cooling and heat exchange.

		Miami	Phoenix
Annual Cooling load	GJ	520.6	346.4
w >0.007 kg/kg-air	GJ	516.8 (99%)	179.4 (52%)
Ventilation desiccant	GJ	434.0	133.2
Seasonal COP		1.19	1.35
Advanced Absorption	GJ	451.0	76.1
Seasonal COP		1.14	2.36

CONCLUSIONS

System coefficient of performance and the annual energy performance have been calculated under different operating conditions for open cycle desiccant and advanced absorption systems. The heat input can be provided by solar or an auxiliary heat source (natural gas). The system coefficient of performance can be directly compared for different types of systems over a range of outdoor temperatures and humidities where the bulk of the cooling demand occurs.

Results of analysis show that in Phoenix the seasonal system COP of advanced absorption systems with heat exchange and evaporative cooling is much larger than that of the ventilation mode desiccant system. In Miami with its greater latent loads, the two systems perform comparably.

The method can be extended to a wide range of desiccant and absorption cooling system configurations and control strategies. Advanced techniques of heat exchange and evaporative cooling that can benefit advanced desiccant systems will give a similar benefit to absorption systems. The ultimate solar application of these technologies will be determined by other factors including the coincidence of the solar resource with the cooling demand; the electrical parasitic power required to operate the systems; and the installed system cost. These issues are beyond the scope of this paper.

ACKNOWLEDGMENTS

The author would like to thank Ian Maclaine-Cross for the fruitful discussion and comment on this work.

REFERENCES

[1] Schlepp, D. R. and Schultz, K. J., "High Performance Solar Desiccant Cooling systems: Performance Evaluations and Research Recommendations," SERI/TR-252-2497, September 1984.

[2] Penney, T. R. and Maclaine-Cross, I., "Promising Advances in Desiccant Cooling," SERI/TP-252-2683, May 1985.

[3] Howe, R.R., Beckman, W.A., and Mitchell, J.W., "Factors Influencing the Performance of Commercial Hybrid Desiccant Air Conditioning Systems," *Proc. 18th Intersociety Energy Conversion Engineering Conference* (IECEC), pp.1940-1946, 1983

[4] Jurinak, J.J., "Open Cycle Desiccant Cooling Component Models and System Simulations," Ph.D. Thesis, University of Wisconsin-Madison, August 1982.

[5] Dao, K., "A New Absorption Cycle: The Single-effect Regenerative Absorption Refrigeration Cycle," LBL-6879, 1978.

[6] Stoeker, W.F., ed. "Energy Calculation 2: Procedures for simulating the performance of components and systems for energy calculations," 3rd ed., ASHRAE, 1975.

[7] Lebouf, C. "Standardized Assumptions and Methods for Solar Heating and Cooling Systems Analyses," SERI/TR-351-402, Solar Energy Research Institute, January 1980.

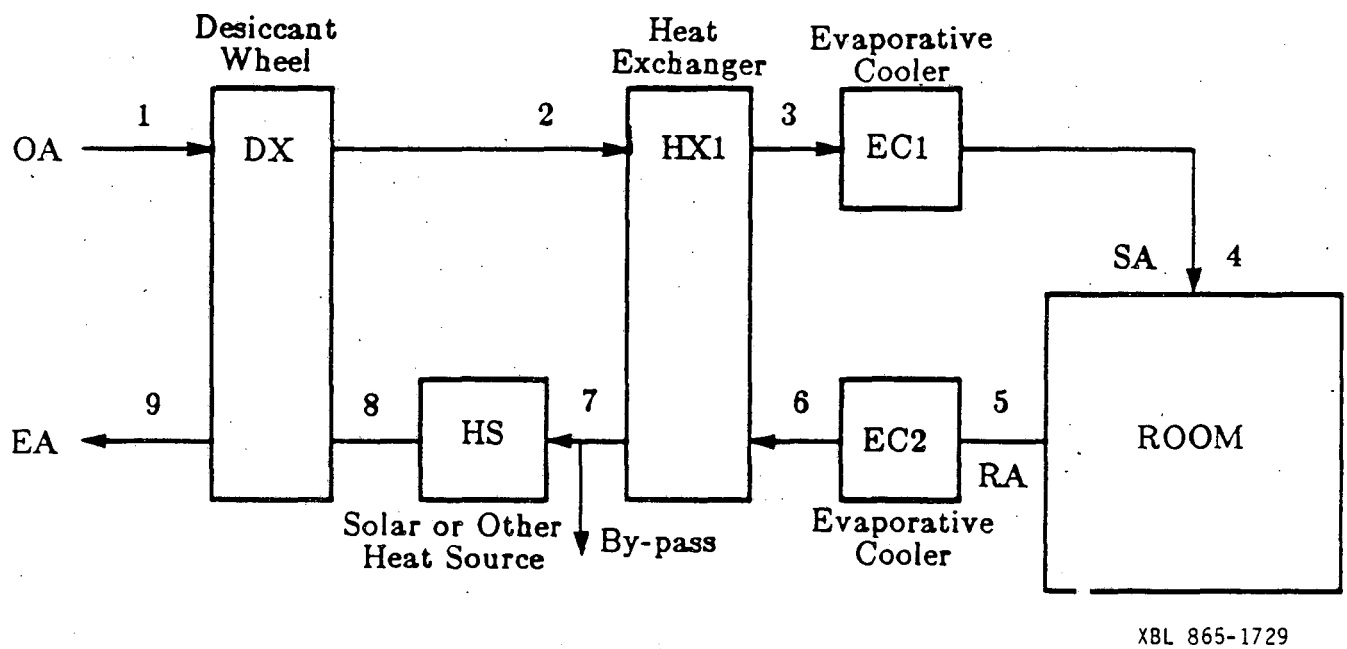

Figure 1. Schematic of a ventilation mode open cycle desiccant cooling system.

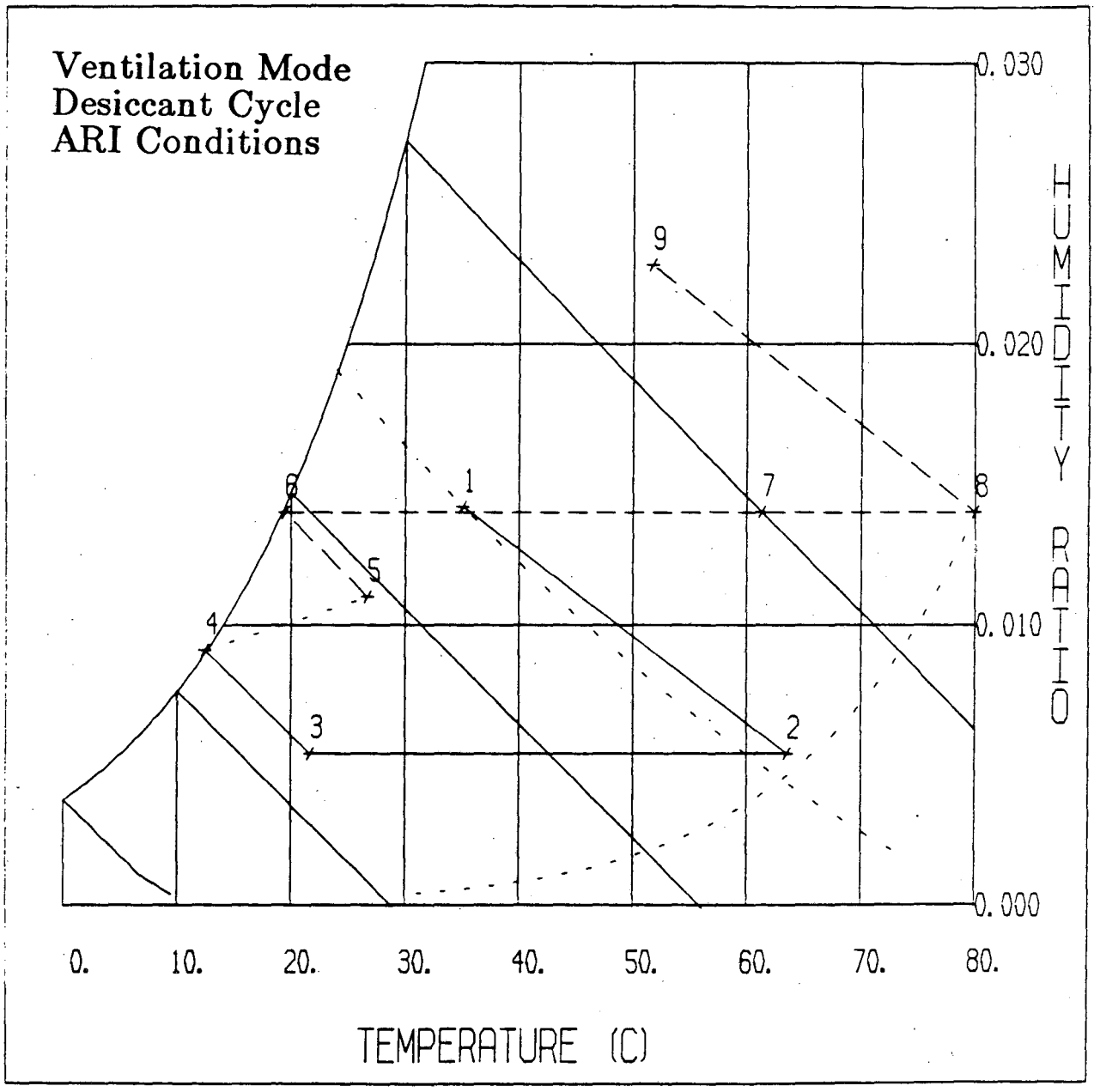

XBL 865-1730

Figure 2. Psychrometric diagram showing the ventilation mode open cycle desiccant cooling system operation at ARI outdoor and return air conditions.

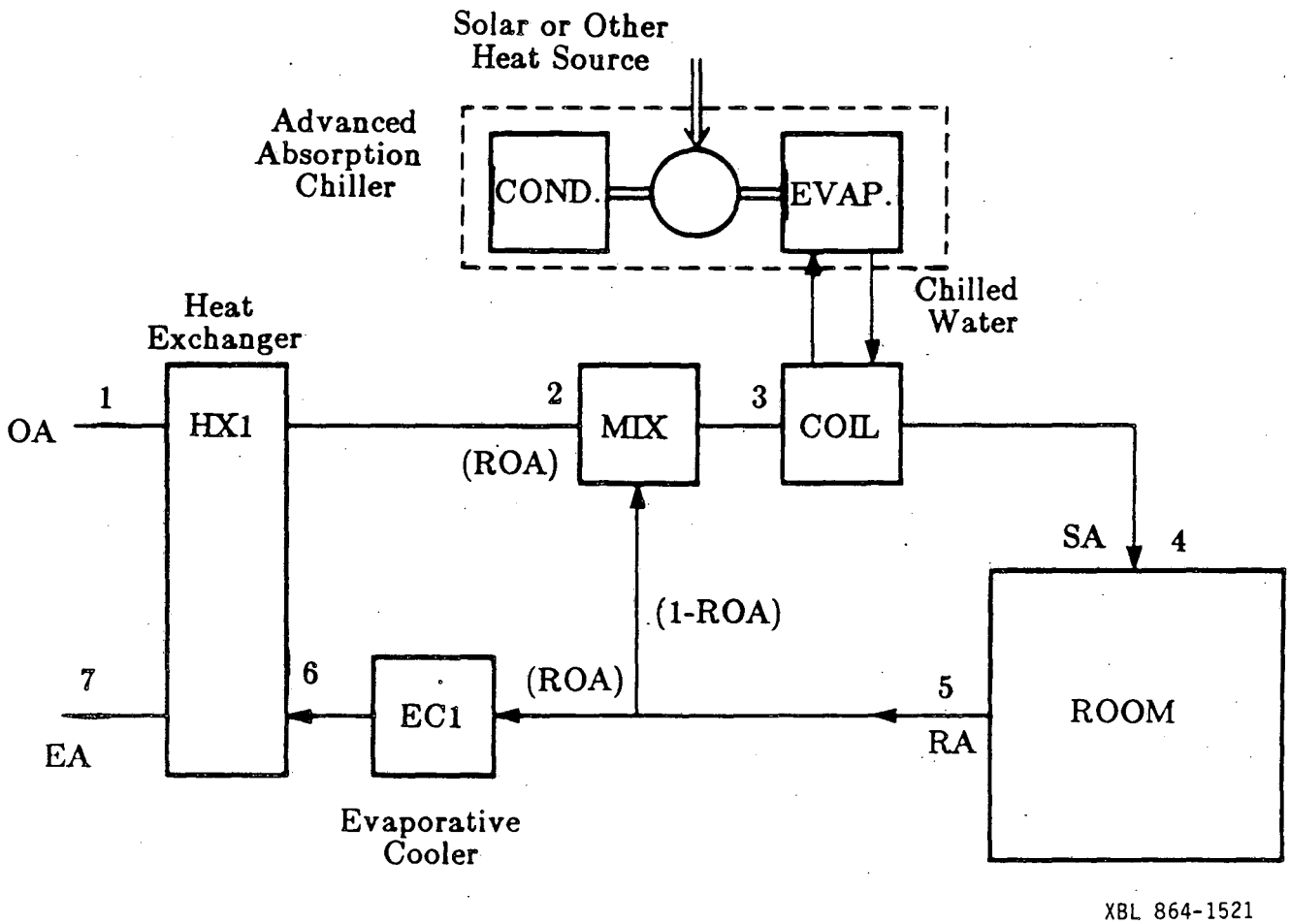

Figure 3. Schematic of a evaporatively cooled closed cycle advanced absorption system with evaporative cooling and air-to-air heat exchange.

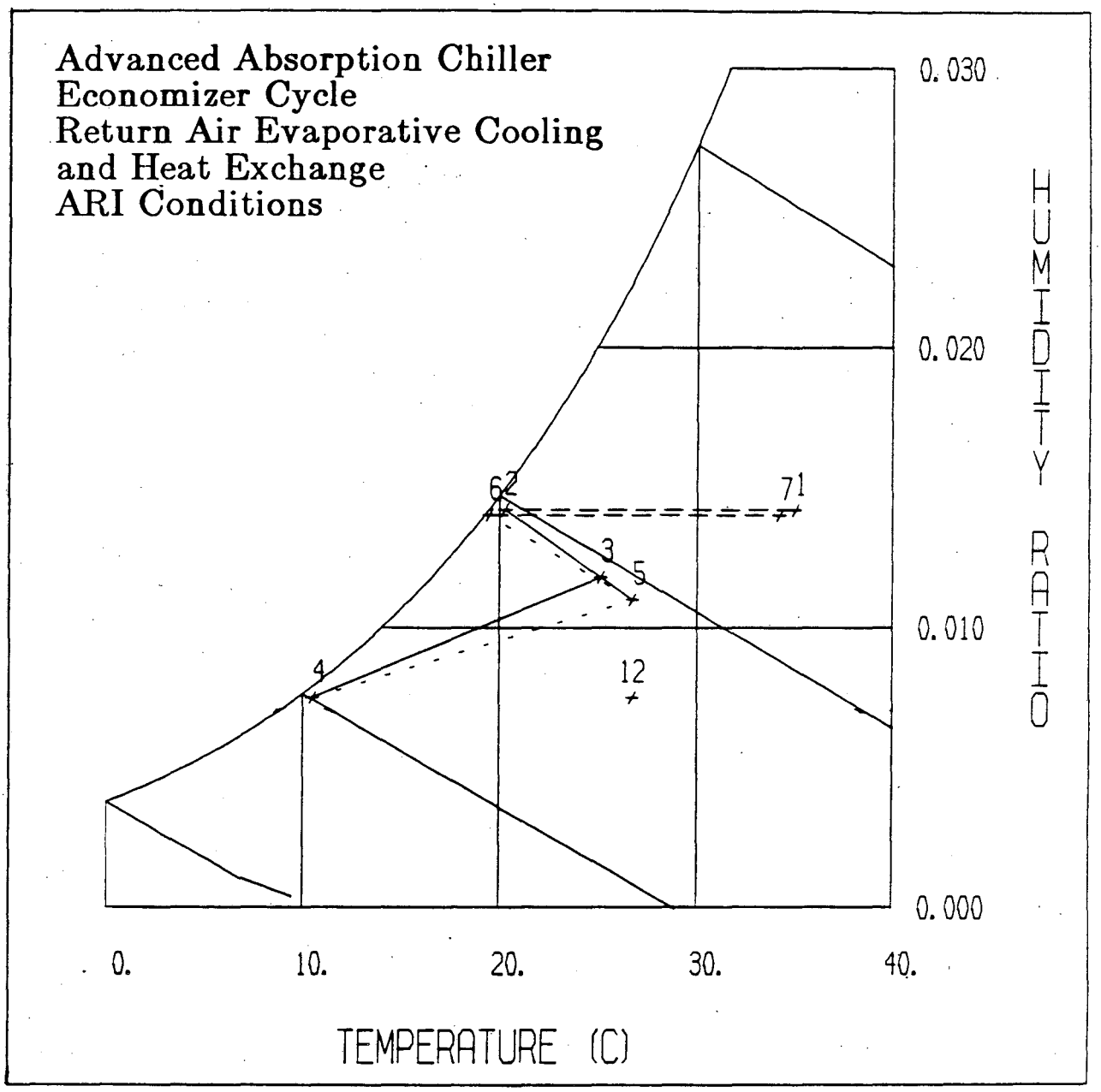

XBL 865-1731

Figure 4. Psychrometric diagram showing the evaporatively cooled closed cycle advanced absorption system with evaporative cooling and air-to-air heat exchange.

This report was done with support from the Department of Energy. Any conclusions or opinions expressed in this report represent solely those of the author(s) and not necessarily those of The Regents of the University of California, the Lawrence Berkeley Laboratory or the Department of Energy.

Reference to a company or product name does not imply approval or recommendation of the product by the University of California or the U.S. Department of Energy to the exclusion of others that may be suitable.

LAWRENCE BERKELEY LABORATORY
TECHNICAL INFORMATION DEPARTMENT
UNIVERSITY OF CALIFORNIA
BERKELEY, CALIFORNIA 94720