LBL-20054
c.2

Lawrence Berkeley Laboratory

UNIVERSITY OF CALIFORNIA

RECEIVED
LAWRENCE
BERKELEY LABORATORY

OCT 9 1985

LIBRARY AND
DOCUMENTS SECTION

Physics Division

Presented at the 9th International Conference on Magnetic Technology, Zurich, Switzerland, September 9-13, 1985

CAPACITOR ENERGY NEEDED TO INDUCE TRANSITIONS FROM THE SUPERCONDUCTING TO THE NORMAL STATE

P.H. Eberhard, adn R.R. Ross

August 1985

TWO-WEEK LOAN COPY
This is a Library Circulating Copy
which may be borrowed for two weeks.

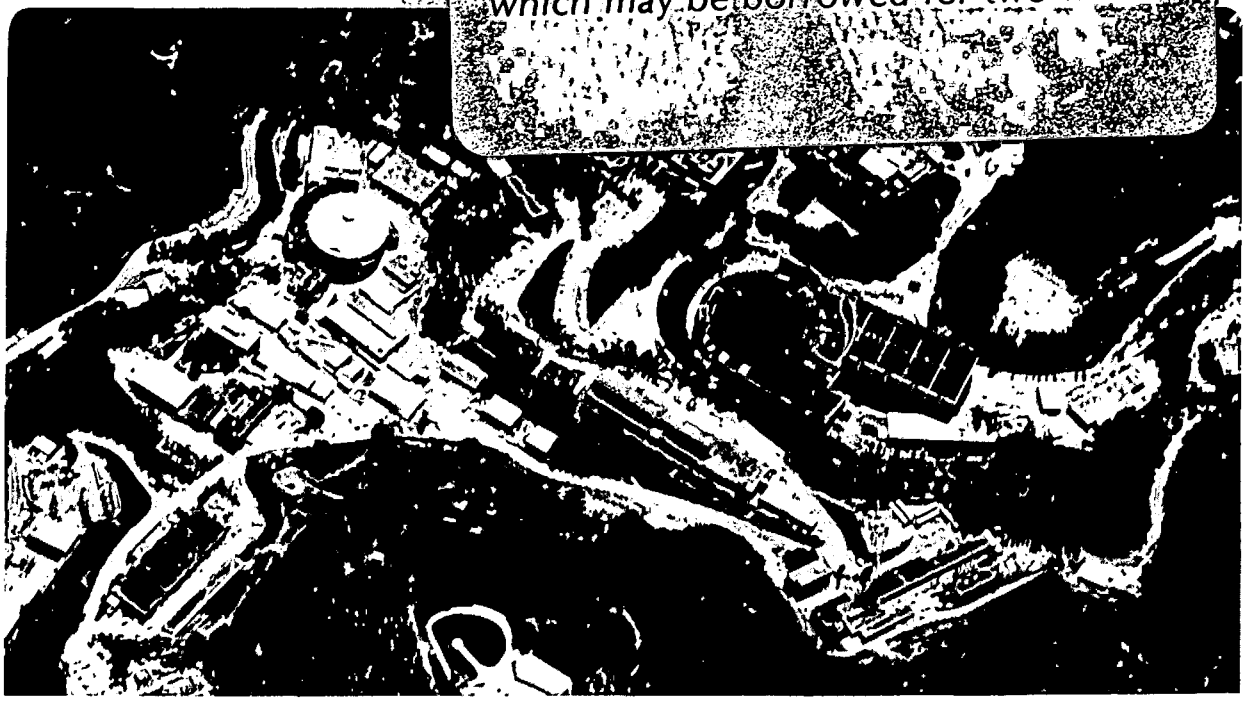

Prepared for the U.S. Department of Energy under Contract DE-AC03-76SF00098

LBL-20054
c.2

DISCLAIMER

This document was prepared as an account of work sponsored by the United States Government. While this document is believed to contain correct information, neither the United States Government nor any agency thereof, nor the Regents of the University of California, nor any of their employees, makes any warranty, express or implied, or assumes any legal responsibility for the accuracy, completeness, or usefulness of any information, apparatus, product, or process disclosed, or represents that its use would not infringe privately owned rights. Reference herein to any specific commercial product, process, or service by its trade name, trademark, manufacturer, or otherwise, does not necessarily constitute or imply its endorsement, recommendation, or favoring by the United States Government or any agency thereof, or the Regents of the University of California. The views and opinions of authors expressed herein do not necessarily state or reflect those of the United States Government or any agency thereof or the Regents of the University of California.

Capacitor Energy Needed To Induce Transitions From The Superconducting To The Normal State

Philippe H. Eberhard and Ronald R. Ross

Lawrence Berkeley Laboratory
University of California
Berkeley, California 94720

August 8, 1985

LBL-20054

CAPACITOR ENERGY NEEDED TO INDUCE TRANSITIONS FROM THE SUPERCONDUCTING TO THE NORMAL STATE [1]

Philippe H. Eberhard

and

Ronald R. Ross

1 Introduction

The purpose of this paper is to describe a technique to turn a long length of superconducting wire normal by dumping a charged capacitor into it and justify some formulae needed in the design. The physical phenomenon is described. A formula for the energy to be stored in the capacitor is given.

There are circumstances where the DC current in an electrical circuit containing superconducting elements has to be turned off quickly and where the most convenient way to switch the current off is to turn a large portion or all of the superconducting wire normal. Such was the case of the Time Projection Chamber (TPC) superconducting magnet as soon as a quench was detected. The technique used was the discharge of a capacitor into the coil center tap as shown on Fig. 1 [1]. It turned the magnet winding normal in ten milliseconds or so and provided an adequate quench protection. The technique of discharging a capacitor into a superconducting wire should have many other applications whenever a substantial resistance in a superconducting circuit has to be generated in that kind of time scale.

The process involves generating a pulse of large currents in some part of the circuit and heating the wire up by AC losses until the value of the wire critical current is smaller than the DC current. Use of low inductance connections to the circuit is necessary. Then the DC current gets turned off due to the resistance of the wire as in a magnet quench.

[1]This work was supported by the U.S. Department of Energy under Contract No. DE-AC03-76SF00098.

The calculations will be performed in detail for one possible application of the technique. Hints will be given as to how to extend the results to other cases. Whenever calculations become too complicated to be performed exactly, an approximation will be made in the direction of conservatism, i.e. such that the capacitor energy therefore its voltage is overestimated rather than underestimated. Future refinements in the calculations to make the capacitor voltage less overestimated are conceivable.

2 The different energies involved

The mechanism consists of raising the wire temperature Θ_W from the ambient value Θ_0 to a value where, after the pulse, the DC current I_{DC} keeps the wire in a state of quench. The temperature reached should be above a critical temperature Θ_c that makes the critical current $I_c(\Theta_c)$ less than I_{DC}. Part of the energy stored in the capacitor of capacitance C_{cap} initially charged to voltage V_{capo} is used to increase the total wire enthalpy from the initial value $H(\Theta_0)$ to the value $H(\Theta_c)$.

$$\Delta H(\Theta_W) = H(\Theta_W) - H(\Theta_0) \tag{1}$$

$$\frac{1}{2}C_{cap}V_{cap0}^2 > \Delta H(\Theta_c) \tag{2}$$

In addition, heat will be communicated to the surrounding insulator, a phenomenon that is more important if the duration Δt of heat deposition is long. Furthermore, the pulsed currents from the capacitor generate magnetic fields, the energy of which may end up after the pulse partly as frozen magnetic energies due to frozen currents in the superconductor, partly as electrostatic energy in the capacitor charged backwards, and partly as thermal energy deposited too slowly to be effective. The magnetic energies exist at all rates of heat deposition because of the superconducting currents but are more important at high rates of heat deposition because additional non negligible currents will be generated in the wire matrix material. All these energies have to be supplied by the capacitor and be included in the calculation of the capacitor's initial energy. Defining ΔH_{ins} as the thermal energy deposited in the insulator and W_{mag} the magnetic energy, we should have

$$\frac{1}{2}C_{cap}V_{cap0}^2 \geq \Delta H + \Delta H_{ins} + W_{mag} \tag{3}$$

In Section 6, it is shown that the wire temperature, the magnetic energy due to superconducting currents and the current at any one time are bound by equations that do not depend on the preceding shape and duration of the current pulse. If currents were limited to superconducting currents and heat was ending up only in the wire, we could write relationships between the current, the magnetic energy, the wire enthalpy and, because of energy conservation, the energy on the capacitor. These relationships would not be dependent on the shape and duration of the current pulse, only on the final value of the current or the final value of the capacitor voltage. For the sake of simplicity, we will make conservative approximations for the heat communicated to the insulator in the time Δt to make it behave just like an increase in wire enthalpy. Currents in the matrix material during the time Δt will also be approximated conservatively in order to get equations similar to these energy relationships we would have had with the superconductor only.

Finally a compromise has to be found for the pulse duration Δt which should be small enough to keep ΔH_{ins} reasonable but also large enough to prevent the magnetic energy W_{mag} and the voltages inflicted on the magnet from becoming prohibitive. We will give formulae to estimate ΔH_{ins} and W_{mag} as functions of Δt. To find a suitable compromise, different computations can be performed for different values of Δt till the most practical value, engineering wise, is found.

For any value Δt of the pulse duration, one should minimize W_{mag} and the voltages by minimizing the inductance L_{cap} of the circuit at the points where the capacitor current will be fed. In the next section, we describe ways to make L_{cap} much smaller than the inductance L_{DC} of the circuit seen by the DC current (by about three orders of magnitude in the case of the TPC magnet). Then, we can determine the value C_{cap} of the capacitor capacitance so that the maximum of the current pulse occurs at the time Δt. Assuming the circuit to be essentially inductive most of the time

$$C_{cap} = \frac{\left(\frac{2}{\pi}\Delta t\right)^2}{L_{cap}} \tag{4}$$

This condition corresponds to the hypothesis that we want the temperature Θ_c reached by the time the current pulse is maximum.

3 Minimizing the inductance L_{cap}

Even if the superconducting circuit has a large inductance L_{DC} for the DC currents supplied by the DC power supply, most of the circuit can presumably be built in two halves in close coupling k to one another. Then the capacitor can be connected as on Fig. 1, between the junction of the two halves and both connections to the power supply. Let L_1 and L_2 be the inductances of either half and M their mutual inductance. For the sake of simplicity, we will assume that L_1 and L_2 have about the same value.

$$L_{DC} = L_1 + L_2 + 2M \cong 4L_1 \tag{5}$$

$$L_{cap} = \frac{L_1 L_2 - M^2}{L_1 + L_2 + 2M} \cong \frac{L_1}{4}(1-k) = \frac{L_{DC}(1-k)}{16} \tag{6}$$

L_{DC} can be large and L_{cap} can be small if the coupling

$$k = \frac{M^2}{L_1 L_2} \tag{7}$$

is close enough to 1. This phenomenon is related to the fact that, on one hand, the current from the power supply runs in such directions in the two halves of the circuit that the overall magnetic flux is reinforced while, on the other hand, the currents from the capacitor run in such directions that their contribution in each half almost cancel each other in the generation of the magnetic fluxes (see directions of the arrows on Fig. 1). In the TPC magnet, the power supply was connected to a solenoidal coil made of two layers in close coupling and the capacitor was connected as shown in Fig. 1 between the junction of the two layers and the power supply connections. The coil self inductance L_{DC} was 4.5 H but the circuit self inductance L_{cap} seen by the capacitor was less than 10 mH.

In principle, any magnet can be built in such a way that it can be connected as in Fig. 1. Use two insulated wires and wind them side by side wherever the current density is needed. Each of these wires is a half circuit with close coupling to the

other. If the two halves are connected as in Fig. 1 with the proper polarities, the DC current will run parallel in the two wires, while the capacitor currents will run in opposite directions.

There are cases where a circuit contains a large inductance that can not be conveniently built in two halves in close inductive coupling. Then one may want to use a superconducting switch as shown on Fig. 2 instead. The switch can be a long length of superconducting wire wound up on a coil form in a non-inductive way inserted in the circuit. Then the inductance of the switch as fed by the current from the power supply and the one for the current from the capacitor are the same and small. Let L_1 and L_2 be the self inductance of each one of the two layers, M the mutual inductance between them and k the coupling coefficient as defined by Eq. (7). We will assume L_1 and L_2 to be about the same and the irreducible inductance of the rest of the circuit to be large in comparison to the switch inductance. The self inductance L_{cap} of the circuit for the current pulse from the capacitor is the same as the inductance of the switch.

$$L_{cap} = L_1 + L_2 - 2M \cong L_1(1-k) \tag{8}$$

If the superconducting circuit runs with a persistent superconducting switch instead of a power supply, the same ideas and calculations apply as for the case of a power supply. In Figs. 1 and 2, the power supply has to be replaced by a short in the cryostat and the two diodes on Fig. 1 can be omitted.

The application we will consider here as an example is the case of a superconducting switch connected as on Fig. 2. The switch is made of two layers of rectangular wire wound in opposite direction on a coil form (Fig. 3) as a means of minimizing the inductance L_{cap} of the two layers in series. Let R be the radius of the winding, a the wire thickness in the radial direction, a_{ins} the thickness of the insulator between the two layers, ℓ the length of the coil in the axial direction, n the total number of turns in the two layers (i.e., twice the number of turns in each layer). We will neglect the volume of insulating material between the turns. We define L_{cap} as the inductance one would measure at room temperature

$$L_{cap} = \frac{\pi}{2}\mu_0 n^2 \frac{R}{\ell}(a_{ins} + a) \tag{9}$$

4 The heat communicated to the insulator

The amount ΔH_{ins} of heat communicated to the insulator is difficult to compute exactly but it is important to have an estimate of it because it is a motivation to keep Δt small. We will give a relatively simple expression for ΔH_{ins} but, to stay on the safe side, it will correspond to a substantially overestimate of the real value.

Our basic assumptions are that the temperature Θ is uniform inside of the wire and equal to a value Θ_W. In the insulator, as a function of the distance y from the wire, Θ drops off toward the value Θ_0 that was the temperature everywhere before the current pulse and which we call the ambient temperature. Defining γ_{ins}, C_{ins} and k_{ins} as the insulator density, specific heat and heat conductivity, respectively, temperature Θ in the insulator satisfies the equation

$$\gamma_{ins} C_{ins} \frac{\partial \Theta}{\partial t} = \frac{\partial}{\partial y}(k_{ins} \frac{\partial \Theta}{\partial y}) \tag{10}$$

which is hard to solve exactly because C_{ins} and k_{ins} depend on the temperature Θ. However, simplifications can be obtained if one is willing to live with an overestimate for ΔH_{ins} instead of a real value. Let's define the functions of Θ

$$h_{ins}(\Theta) = \gamma_{ins} \int_{\Theta_0}^{\Theta} C_{ins} d\Theta \tag{11}$$

$$f_{ins}(\Theta) = \int_{\Theta_0}^{\Theta} k_{ins} d\Theta \tag{12}$$

The total heat conducted away from the wire to the insulator is

$$\Delta H_{ins} = 8\pi R \ell \int_0^{\infty} h_{ins} dy \tag{13}$$

The distribution of h_{ins} is given if the distribution of Θ is given, therefore if the one of f_{ins} is given. The quantity f_{ins} obeys the equation

$$\frac{\partial f_{ins}}{\partial t} = \frac{k_{ins}}{\gamma_{ins} C_{ins}} \frac{\partial^2 f_{ins}}{\partial y^2} \tag{14}$$

Instead of the real C_{ins} in the above equation, we will use an increased value so that f_{ins} satisfies a diffusion equation with a constant diffusion coefficient D.

Intuitively, it can be seen that increasing C_{ins} is equivalent to introducing a sink of heat, therefore, it will only make us overestimate ΔH_{ins}, not underestimate it.

$$D = \ minimum\ of\ \frac{k_{ins}}{\gamma_{ins} C_{ins}}\ for\ \Theta_0 < \Theta < \Theta_c \tag{15}$$

$$\frac{\partial f_{ins}}{\partial t} = D \frac{\partial^2 f_{ins}}{\partial y^2} \tag{16}$$

In our approximation

$$\Delta H_{ins} \cong \frac{8\pi R\ell}{D} \int_0^\infty f_{ins} dy \tag{17}$$

We will make an additional assumption. When the wire temperature has reached the value Θ_W, we assume that the heat communicated to the insulator is the same as if the wire temperature was suddenly raised from Θ_0 to Θ_W and kept there for the whole length of time Δt. Intuitively, it is easily seen that this hypothesis will make us overestimate ΔH_{ins} even more. Then, the diffusion equation for f_{ins} can be solved. Its distribution in y is

$$f_{ins} = f_{ins,0} \sqrt{\frac{2}{\pi}} \int_{\frac{y}{\sqrt{2D\Delta t}}}^{\infty} e^{-\frac{u^2}{2}} du \tag{18}$$

where $f_{ins,0}$ is the value of f_{ins} for the temperature of the wire Θ_W. Integrating the above expression of ΔH_{ins} by parts, we get

$$\begin{aligned} \Delta H_{ins}(\Theta_W) &= \tfrac{8\pi R\ell}{D} \int y(-\tfrac{\partial f_{ins}}{\partial y}) dy = \\ &= 16\pi R\ell \sqrt{\tfrac{\Delta t}{\pi D}} f_{ins,0} = 16 R\ell \sqrt{\tfrac{\pi \Delta t}{D}} \int_{\Theta_0}^{\Theta_W} k_{ins} d\Theta \end{aligned} \tag{19}$$

The depth at which the heat penetrates into the insulator can be obtained from the spatial distribution of f_{ins}. It is typically

$$< y > = \frac{\int y f_{ins} dy}{\int f_{ins} dy} = \frac{\sqrt{\pi D \Delta t}}{2} \tag{20}$$

The above calculation makes sense only if the insulator around the wire is uniform to a much larger depth than the mean depth $< y >$ computed here. Otherwise corrections should be applied.

The above calculation gives ΔH_{ins} as a function of Θ_W. If a less elaborate estimate is wanted, one can calculate ΔH_{ins} for $\Theta_W = \Theta_c$ and approximate ΔH_{ins} for lower values of Θ_W using the ratio $r_{ins,c}$

$$\Delta H(\Theta_W) = H(\Theta_W) - H(\Theta_0) \tag{21}$$

$$r_{ins,c} = \frac{\Delta H_{ins}(\Theta_W = \Theta_c)}{\Delta H(\Theta_W = \Theta_c)} \tag{22}$$

The approximation consists of assuming

$$\Delta H_{ins}(\Theta_W) = r_{ins,c} \Delta H(\Theta_W) \tag{23}$$

In this approximation, the heat communicated to the insulator acts like an increase of the material of the wire in the ratio $1 + r_{ins,c}$.

5 The magnetic field and the heat deposition

The DC current is assumed to be spread uniformly over the cross section A_W of the wire, as a result of the twist of the filament and the very long time for which the DC current I_{DC} is assumed to have been on. The DC current density J_{DC} satisfies

$$J_{DC} = \frac{I_{DC}}{A_W} \cong \frac{nI_{DC}}{2a\ell} \tag{24}$$

Let us consider the phenomena happening during the rise of the current pulse. Unlike the DC current in our example (Fig. 2), the pulse of current from the capacitor is affected by a strong skin effect. The pulse of current, ΔI, is superposed to the DC current I_{DC} and, like the DC current in our example (Fig. 2), it flows in one direction in one layer and in the other direction, in the other layer. A significant change ΔB_{ins} in magnetic field is generated in the insulator between the layers. There is also some change ΔB in magnetic field inside of the wire up to some penetration depth p on either layer. Since the change in the magnetic field requires the presence of electric field, the current density $J_{DC} + \Delta J$ in the penetration depth is equal to the sum of the critical current density J_c at the temperature of the wire at that time and the resistive current in the normal components (i.e. matrix + superconductor turned normal). Therefore,

$$|\Delta J| \geq J_c - J_{DC} \tag{25}$$

The spatial dependence of ΔB as a function of the radius r can be derived from Maxwell's equation

$$\frac{\partial \Delta B}{\partial r} = \pm \mu_0 |\Delta J| \tag{26}$$

where the $+(-)$ sign refers to the inner (outer) layer. From Eqs. (25) and (26) it follows that the field ΔB has to vanish at some penetration depth p

$$p \leq \frac{\Delta B_{ins}}{\mu_0 (J_c - J_{DC})} \tag{27}$$

In the wire beyond the penetration depth p, the quantities ΔB and ΔJ are zero. This means that the magnetic field and the current density there have their DC values, i.e. the ones they had before the current pulse.

In this section we will neglect the resistive current density in the matrix material and assume the current density in the superconductor turned normal to be the critical current J_c. Computations can be carried out quite accurately under the assumption, provided that the estimation of ΔH_{ins} as a function of Θ_W is accurate enough or negligible. Unfortunately, these computations will have to be corrected later for the currents generated in the wire matrix material (see Section 8). But the study of the case without resistive currents will permit us to describe the phenomenon qualitatively.

When resistive currents are neglected, the spatial distributions of ΔJ and ΔB are as shown on Figs. 4a and 4b.

$$\Delta J = J_c - J_{DC} \textit{ in the penetration depth} \tag{28}$$

$$\Delta B_{ins} = p \mu_0 \Delta J \tag{29}$$

$$\Delta I = A_W \frac{p}{a} \Delta J \cong \frac{2\ell}{n} p \Delta J = \frac{2\ell}{n\mu_0} \Delta B_{ins} \tag{30}$$

Inside the wire, the electric field is essentially in the azimuthal direction and its azimuthal component E satisfies

$$\frac{\partial \Delta B}{\partial t} = -\frac{\partial E}{\partial r} \tag{31}$$

In the insulator, Eq. (31) does not apply because of the difference of potential between the two layers generates a radial component of the electric field. In the wire beyond the penetration depth, the electric field is zero. Within the penetration depth, its azimuthal component E at a point at radius r depends on the distance δr of that point to the penetration depth.

$$|E| = \frac{d}{dt}\left(\mu_0 \Delta J \frac{\delta r^2}{2}\right) \tag{32}$$

The shape of E versus r is shown in Fig. 4c. The electric field will make the current density in the penetration depth to deposit heat. That heat is assumed to raise the temperature of the wire uniformly and, as described in Section 4, contributes to the heating of the insulator. Per unit of volume of the wire, the rate of heat deposition $\dot{Q}$ is

$$\dot{Q} = \frac{1}{a}\int (J_{DC} + \Delta J) E dr = \frac{\mu_0}{6a} J_c \frac{d}{dt}\left[\Delta J p^3\right] \tag{33}$$

Defining C_p as the wire specific heat per unit of weight, γ the density and Θ_W the wire temperature.

$$\dot{Q} = \gamma C_p \frac{d\Theta_W}{dt}\left[1 + r_{ins}(\Theta_W)\right] \tag{34}$$

where

$$r_{ins}(\Theta_W) = \frac{\frac{d[\Delta H_{ins}(\Theta_W)]}{d\Theta_W}}{\frac{d[\Delta H(\Theta_W)]}{d\Theta_W}} \tag{35}$$

Equating Eqs. (33) and (34), we get

$$\frac{1}{6a}\frac{d}{dt}\left[\Delta J p^3\right] = \frac{\gamma C_p}{\mu_0 J_c}\frac{d\Theta_W}{dt}(1 + r_{ins}(\Theta_W)) \tag{36}$$

which can be integrated over time using an ad-hoc thermo dynamical function

$$G(\Theta) = \int_0^{\Theta} \frac{\gamma C_p(\Theta\prime)}{\mu_0 J_c(\Theta\prime)}[1 + r_{ins}(\Theta\prime)] d\Theta\prime \tag{37}$$

$$\frac{\Delta J p^3}{6a} = G(\Theta_W) - G(\Theta_0) = \Delta G(\Theta_W) \tag{38}$$

where Θ_0 is the temperature of the wire before the current pulse. From Eq. (38) we can derive the penetration depth that has to be reached to get to a given temperature Θ_W.

$$p = \left[\frac{6a\{G(\Theta_W) - G(\Theta_0)\}}{J_c(\Theta_W) - J_{DC}}\right]^{1/3} = \left[\frac{6a\Delta G}{\Delta J}\right]^{1/3} \tag{39}$$

Using Eqs. (29) and (30) we get the intensity of field in the insulator and the current that have to be generated to get the temperature Θ_W

$$\Delta B_{ins} = \mu_0 \left[6a\{J_c(\Theta_W) - J_{DC}\}^2\{G(\Theta_W) - G(\Theta_0)\}\right]^{1/3} = \mu_0 \left[6a\Delta J^2 \Delta G\right]^{1/3} \tag{40}$$

$$\Delta I = \frac{2\ell}{n}\left[6a\Delta J^2 \Delta G\right]^{1/3} \tag{41}$$

6 The magnetic energy without resistive currents

Beyond the penetration depth, in either layer, the electric field is zero. There is a voltage difference between points beyond the penetration depth in the outer layer and other points beyond the penetration depth in the inner layer at the same azimuth and axial position. The voltage is associated to magnetic induction phenomena in between. The voltage difference is equal to the time derivative of the magnetic flux ϕ in that continuous circuit formed by the part of the wire where the electric and magnetic fields are zero. From the shape of the magnetic field shown on the Fig. 4b, one sees that the pulsed component $\Delta\phi$ of ϕ,

$$\Delta\phi = \Delta B_{ins}(a_{ins} + p)\pi R n = L_{cap}\frac{a_{ins} + p}{a_{ins} + a}\Delta I \tag{42}$$

where a_{ins} is the thickness of the insulator between the two layers.

The voltage V_{cap} across the capacitor is related to $\Delta\phi$

$$V_{cap} = \frac{d}{dt}(\Delta\phi) \tag{43}$$

The current pulse ΔI is also the current supplied between the points of connection to the capacitor. Therefore, there is an energy W_{tot} delivered to the circuit

$$
\begin{aligned}
\frac{dW_{tot}}{dt} &= \Delta I\, V_{cap} = \frac{2\ell}{\mu_0 n}\Delta B_{ins}\frac{d}{dt}(\Delta\phi) = \\
&= \frac{2\pi R\ell}{\mu_0}\Delta B_{ins}\frac{d}{dt}\left[\Delta B_{ins}\left(a_{ins}+p\right)\right] = \\
&= \frac{2\pi R\ell}{\mu_0}\left\{\frac{d}{dt}\left[\Delta B_{ins}^2\left(\frac{a_{ins}}{2}+\frac{p}{3}\right)\right]+\frac{1}{3}\frac{\Delta B_{ins}}{p}\frac{d}{dt}\left(\Delta B_{ins}p^2\right)\right\}
\end{aligned}
\tag{44}
$$

From Eqs. (39), (40) and (37), we derive the expression

$$
\begin{aligned}
\frac{\Delta B_{ins}}{p}\frac{d}{dt}(\Delta B_{ins}p^2) &= 6\mu_0^2 a\Delta J\frac{d}{dt}\left[\Delta G\right] = \\
&= 6\mu_0 a\gamma C_p\left[1+r_{ins}(\Theta_W)\right]\frac{d\Theta_W}{dt} - \mu_0 J_{DC}\frac{d}{dt}\left(\Delta B_{ins}p^2\right)
\end{aligned}
\tag{45}
$$

We can integrate Eq. (44) using the total wire enthalpy change ΔH

$$
\Delta H(\Theta) = 4\pi R\ell a\gamma\int_{\Theta_0}^{\Theta_W} C_p(\Theta)d\Theta \tag{46}
$$

and the heat communicated to the insulator

$$
\Delta H_{ins} = \int_{\Theta_0}^{\Theta_W} r_{ins}(\Theta)d(\Delta H) \tag{47}
$$

We define

$$
W_{tot} = \Delta H(\Theta_W) + \Delta H_{ins} + 2\pi R\ell\left[\frac{\Delta B_{ins}^2}{\mu_0}\left(\frac{a_{ins}}{2}+\frac{p}{3}\right) - \frac{J_{DC}}{3}\Delta B_{ins}p^2\right] \tag{48}
$$

On the right hand side of Eq. (48) the terms $\Delta H(\Theta_W)+\Delta H_{ins}$ are the thermal energy deposited in the wire and the insulator respectively. Therefore the rest of the right hand side expresses the magnetic energy that the system has when the wire has reached the temperature Θ_W. Therefore

$$
\begin{aligned}
W_{mag}(\Theta_W) &= 2\pi R\ell\left[\frac{\Delta B_{ins}^2}{\mu_0}\left(\frac{a_{ins}}{2}+\frac{p}{3}\right) - \frac{1}{3}J_{DC}\Delta B_{ins}p^2\right] = \\
&= 2\mu_0\pi R\ell\left[(6a\Delta J^2\Delta G)^{2/3}\frac{a_{ins}}{2} + 2a(\Delta J - J_{DC})\Delta G\right] = \\
&= L_{cap}\left[\frac{1}{2}\frac{a_{ins}+\frac{2}{3}p}{a_{ins}+a}\Delta I^2 - \frac{1}{3}\frac{p^2}{a(a_{ins}+a)}I_{DC}\Delta I\right]
\end{aligned}
\tag{49}
$$

The same formulae can be obtained making a strict magnetic energy calculation, including the change of magnetic field in intensity and shape inside of the wire and the energy ($= -\Delta\phi I_{DC}$) taken by the large irreducible inductance of Fig. 2. However we would not have obtained the time dependent equations that could give us a complete description of the time dependence of the current in an exact calculation.

It is remarkable that the energy W_{mag} is strictly a function of Θ_W regardless of the shape and duration of the current pulse supplied at the points of connections to the capacitor, as long as the resistive currents are negligible. It is a property of superconducting wires. That expression of W_{mag} represents the minimum magnetic energy we have to cope with even if the current pulse is very long.

7 The evolution of the pulse

The energy W_{tot} is taken out of the capacitor energy, as long as there is still energy left in it. Defining V_{cap0} as the initial voltage on the capacitor

$$\frac{C_{cap}}{2}(V_{cap0}^2 - V_{cap}^2) = W_{tot} = \Delta H(\Theta_W) + \Delta H_{ins}(\Theta_W) + W_{mag}(\Theta_W) \qquad (50)$$

At the beginning of the current pulse, the wire temperature Θ_W rises. Therefore $\Delta H(\Theta_W)$, $\Delta H_{ins}(\Theta_W)$ and W_{mag} start at an initial value zero and rise too. Therefore the capacitor energy will decrease continously till the capacitor voltage V_{cap} is zero. As the wire temperature rises, J_c and ΔJ will decrease from their non zero initial value but ΔI and ΔB_{ins} will rise from zero because, in the beginning, the penetration p rises faster than ΔJ decreases. Eventually, if there is enough energy in the capacitor, the penetration depth p will reach the full wire thickness a. Then, if we can still neglect the resistive currents, the current density is uniform and equal to $J_c(\Theta_W)$, the expressions of the current ΔI and of the magnetic energy W_{mag} are

$$\Delta I = (J_c(\Theta_W) - J_{DC})\frac{2a\ell}{n} = I_c(\Theta_W) - I_{DC} \qquad (51)$$

$$\begin{aligned} W_{mag} &= 2\pi R\ell\left[\frac{\Delta B_{ins}^2}{\mu_0}\left(\frac{a_{ins}}{2} + \frac{a}{3}\right) - \frac{a^2}{3}J_{DC}\Delta B_{ins}\right] = \\ &= L_{cap}\left[\frac{1}{2}\frac{a_{ins}+\frac{2}{3}a}{a_{ins}+a}\Delta I^2 - \frac{1}{3}\frac{a}{a_{ins}+a}I_{DC}\Delta I\right] \end{aligned} \qquad (52)$$

As the temperature $\Delta\Theta_W$ rises some more, the critical current density $J_c(\Theta_W)$ continues to decrease and reaches the value J_{DC} eventually. The superconducting component ΔI of the current and the corresponding magnetic energy W_{mag} decrease continuously after $p = a$ and eventually become zero. Therefore, W_{mag} has a maximum as a function of Θ_W between the initial value Θ_0 and the critical value Θ_c. The maximum occurs before or at the time the penetration depth reaches the wire

full thickness a. Depending on the relative importance of $\Delta H + \Delta H_{ins}$ and W_{mag}, there will be a maximum of $W_{tot} = \Delta H + \Delta H_{ins} + W_{mag}$ as a function of Θ_W or there will not be. If there is one maximum for W_{tot}, before the penetration depth p reaches the thickness a there will be a fast jump of p to the value a with a transition of the temperature Θ_W to a higher value and with conversion of magnetic energy into heat. That phenomenon, analogous to the known phenomenon of flux jump [2], is slowed down by the resistive currents which we have neglected so far.

When determining the initial voltage V_{cap0} needed on the capacitor, one has to take into account the possibility that the function W_{tot} may have a maximum before $\Theta_W = \Theta_c$ and that this maximum may be higher than the final value of W_{tot} for $\Theta_W = \Theta_c$. For $\Theta_0 < \Theta_W < \Theta_c$, $W_{mag}(\Theta_W)$ has to be calculated to compute $W_{tot}(\Theta_W)$. $W_{tot}(\Theta_W)$ has to be plotted for these values of Θ_W to determine the maximum $W_{tot,max}$, which may occur at $\Theta_W = \Theta_c$ or before then. To insure that the process does not stop before completion, one requires that the energy stored on the capacitor exceeds all energies $W_{tot}(\Theta_W)$ for all $\Theta_W < \Theta_c$

$$W_{tot}(\Theta_W) \; for \; all \; \Theta_W \leq \Theta_c \tag{53}$$

Therefore,

$$\frac{1}{2} C_{cap} V_{cap0}^2 > W_{tot,max} \tag{54}$$

8 Corrections for resistive currents

The correction for resistive currents cannot be computed simply and accurately at the same time. We will use a grossly approximated expression. Therefore we feel justified in simplifying also the expressions of W_{mag}. Whether or not the penetration depth is less than the thickness a, we will use

$$W_{mag} = \frac{1}{2} L_{cap} \Delta I^2 \tag{55}$$

As can be seen by comparing this equation to more accurate expressions of W_{mag}, this simplification leads to greater overestimation of the voltage V_{cap0} to be stored on the capacitor.

Furthermore, to provide the possibility to turn the superconducting switch normal for all the values of the positive DC currents I_{DC}, we will give expressions of W_{mag} and therefore V_{cap0} corresponding to the most constraining case. If the circuit has to be operated with currents I_{DC} of both polarities, one can always reverse the polarity of the capacitor connections to the circuit when the DC current is reversed. Allowing for this possibility, our condition of I_{DC} positive does not restrict the range of applications. The most constraining case is $I_{DC} = 0$ because it makes change in current ΔI maximum and also because the temperature at which $I_c(\Theta)$ equal I_{DC} is the maximum.

$$P(\Theta_W) = \left[\frac{6a\Delta G(\Theta_W)}{J_c(\Theta_W)}\right]^{1/3} \tag{56}$$

If $P < a$, the penetration depth p is equal to $P(\Theta_W)$

$$\Delta I = J_c(\Theta_W)P\frac{2\ell}{n} \tag{57}$$

If $P > a$, the penetration depth p is equal to a

$$\Delta I = J_c(\Theta_W)a\frac{2\ell}{n} \tag{58}$$

So far we have considered only the supercurrent I carried by the superconductor. This assumption is good in the beginning of the pulse because the electric field E rises continously as a function of time from its initial value zero. However, it cannot be good at the end because the supercurrent must eventually decrease as the critical current density J_c approaches zero. Above its critical current density, the superconductor carries some resistive current but the matrix material carries most of the resistive current wherever the electric field E is not zero. Let ρ_W be the wire effective resistivity corresponding to the superconductor turned normal and the matrix material in parallel. Within the penetration depth p, the total current density J_{tot} and the superconductor critical current density J_c are approximately related to one another by the equation

$$J_{tot} \cong J_c + \frac{E}{\rho_W} \tag{59}$$

The total current I_{tot} and the supercurrent I satisfy

$$I = \frac{2\ell}{n} p J_c \tag{60}$$

$$I_{tot} = \frac{2\ell}{n} \int J dr = I + \frac{2\ell}{n\rho_W} \int E dr \tag{61}$$

Let's define

$$\beta = \int E dr = \frac{n\rho_W}{2\ell}(I_{tot} - I) \tag{62}$$

The rate of heat deposition per unit of volume and second is

$$\dot{Q} = \frac{1}{a} \int J_{tot} E dr = \frac{J_c}{a} \int E dr + \frac{1}{\rho_W a} \int E^2 dr \tag{63}$$

Using Schwartz inequality

$$\int E^2 dr > \frac{(\int E dr)^2}{\int dr} = \frac{\beta^2}{p} \tag{64}$$

$$\dot{Q} > \frac{J_c \beta}{a} + \frac{\beta^2}{\rho_W a p} = \frac{n^2 \rho_W}{4\ell^2 p a} I_{tot}(I_{tot} - I) \geq \frac{n^2 \rho_W}{4\ell^2 a^2} I_{tot}(I_{tot} - I) \tag{65}$$

That heat deposited Q is the heat that is supposed to increase the temperature of the wire to the critical temperature Θ_c, communicating the heat ΔH to the wire and ΔH_{ins} to the insulator. In order to accomplish that in a time Δt, we need electric field, thus resistive current. However we do not need more current than the limit given by

$$\frac{\Delta H + \Delta H_{ins}}{\Delta t} = 4\pi R \ell a \dot{Q} > \frac{\pi n^2 R \rho_w}{\ell a}(I_{tot}^2 - I_{tot} I) \tag{66}$$

Let's define R_W as the total resistance of the wire if it is turned normal.

$$R_W = \frac{n^2 \pi R}{a\ell} \rho_W \tag{67}$$

We overestimate the current I_{tot}, therefore the corresponding magnetic energy by assuming that I_{tot} satisfies

$$I_{tot}^2 - I_{tot} I = \frac{\Delta H + \Delta H_{ins}}{R_W \Delta t} \tag{68}$$

Let's define I_{Res} as the value taken by I_{tot} in the ranges of temperatures where the critical current density J_c, thus the supercurrent I is zero (such as when $\Theta_W = \Theta_c$ at the end of the pulse).

$$I_{Res} = \sqrt{\frac{\Delta H(\Theta_c) + \Delta H_{ins}(\Theta_c)}{R_W \Delta t}} \tag{69}$$

Then,

$$I_{tot} = \frac{I}{2} + \sqrt{\frac{I^2}{4} + I_{Res}^2} \tag{70}$$

After correction for the resistive currents, the total magnetic energy is

$$W_{mag} = \frac{1}{2} L_{cap} I_{tot}^2 \tag{71}$$

To make sure this estimate of W_{mag} is conservative, one has to make sure that the estimate of the supercurrent I is conservative. We have an estimate of I from Eq. (60), which was arrived at neglecting resistive currents. We have now to demonstrate that , for a given wire temperature, the real supercurrent is lower than the estimate of Eq. (60).

In Section 5, we considered the heat generated by the supercurrents only as the penetration depth p gets larger and larger. If the heat generated by resistive currents is added to the effect of the supercurrents, it can only make the temperature Θ_W higher for a given penetration depth, not lower. Equation (36) with ΔJ limited to the superconducting current density turns into an inequality. Therefore, the penetration depth from Eq. (56) is lower for a given Θ_W if resistive currents are taken into account. Therefore the real supercurrent I is smaller than the estimate of Eq. (60). Equation (71) is conservative.

9 Summary

In order to turn a long piece of superconducting wire normal, one can use the discharge of a capacitor into all or part of the superconducting circuit. In general, to make this technique feasible, it is necessary and generally possible to provide a path of low inductance for the capacitor current to be discharged into (See Figs. 1 and 2).

The energy required to be stored on the capacitor depends critically on the time Δt, which is the time allotted to the heat deposition during the capacitor discharge. Several values of Δt can be considered and consequences be drawn in order to help make the choice of a value for Δt.

The capacitance C_{cap} of the capacitor should be

$$C_{cap} = \frac{\left(\frac{2}{\pi}\Delta t\right)^2}{L_{cap}} \tag{72}$$

The circuit may be carrying a large DC current I_{DC}. If the voltage on the capacitor is set to trigger the transition for all values of I_{DC}, it is sufficient to use a voltage that is adequate for a zero DC current and, if necessary, provide a possibility to invert the capacitor connections to the circuit when the DC current polarity is reversed.

We define Θ_0 and Θ_c as the ambient and the critical temperature of the wire, γ the wire density, $C_P(\Theta_W)$ its specific heat as a function of the wire temperature Θ_W and a the wire thickness.

$$\begin{aligned} \Delta H(\Theta) &= 4\pi R\ell a\gamma \int_{\Theta_0}^{\Theta_W} C_p(\Theta)d\Theta = \\ &= Volume\ of\ wire\ \times \gamma \int_{\Theta_0}^{\Theta_W} C_P(\Theta)d\Theta \end{aligned} \tag{73}$$

where R and ℓ are parameters relevant to the example described in the preceding sections. That example is a two layer superconducting coil made of two layers wound noninductively, of radius R, length ℓ, connected as in Fig. 2.

We define $\gamma_{ins}, k_{ins}(\Theta)$ and $C_{ins}(\Theta)$ as the density,the heat conductivity and the specific heat of the insulator surrounding the wire as functions of the temperature Θ

$$D = minimum\ of\ \frac{k_{ins}(\Theta)}{\gamma_{ins}C_{ins}(\Theta)}\ for\ \Theta_0 < \Theta < \Theta_c \tag{74}$$

The depth to which heat penetrates the insulator is represented typically by

$$< y >= \frac{\sqrt{\pi D\Delta t}}{2} \tag{75}$$

Check that $< y >$ is small enough so that the data used for C_{ins} and k_{ins} are valid.

$$\begin{aligned}\Delta H_{ins}(\Theta_W) &= 16R\ell\sqrt{\frac{\pi\Delta t}{D}}\int_{\Theta_0}^{\Theta_W} k_{ins}d\Theta = \\ &= 2A_{ins}\sqrt{\frac{\Delta t}{\pi D}}\int_{\Theta_0}^{\Theta_W} k_{ins}d\Theta\end{aligned} \tag{76}$$

where A_{ins} is the area of contact between the wire and the insulator

$$r_{ins}(\Theta_W) = \frac{\frac{d[\Delta H_{ins}(\Theta_W)]}{d\Theta_W}}{\frac{d[\Delta H(\Theta_W)]}{d\Theta_W}} \tag{77}$$

We define R_W as the resistance of the whole wire turned normal

$$I_{Res} = \sqrt{\frac{\Delta H(\Theta_c) + \Delta H_{ins}(\Theta_c)}{R_W \Delta t}} \tag{78}$$

If the connections are as in Fig. 2, a first attempt of an overestimate of the energy to be stored on the capacitor is expressed by

$$\frac{1}{2}C_{cap}V_{cap0}^2 = \Delta H(\Theta_c) + \Delta H_{ins}(\Theta_c) + \frac{1}{2}L_{cap}I_{Res}^2 \tag{79}$$

This estimate of V_{cap0} will insure efficiency provided Θ_c is the temperature for which the maximum energy is required from the system. To be safe, it is necessary to consider a few values of wire temperature Θ_W between Θ_0 and Θ_c. From the wire thickness a and from the wire critical current density $J_c(\Theta_W)$ at the temperature Θ_W or from the wire critical current $I_c(\Theta_W)$, we define

$$J_c(\Theta_W) = \frac{n}{2a\ell}I_c(\Theta_W) = \frac{I_c(\Theta_W)}{wire\ crossection} \tag{80}$$

where n is the number of turns in the example described in this paper.

$$\Delta G(\Theta) = \int_{\Theta_0}^{\Theta} \frac{\gamma C_p(\Theta\prime)}{\mu_0 J_c(\Theta\prime)}[1 + r_{ins}(\Theta\prime)]d\Theta\prime \tag{81}$$

$$P(\Theta_W) = \left[\frac{6a\Delta G(\Theta_W)}{J_c(\Theta_W)}\right]^{1/3} \tag{82}$$

If $P < a$, the penetration depth p is equal to $P(\Theta_W)$

$$I(\Theta_W) = J_c(\Theta_W)P\frac{2\ell}{n} = I_c(\Theta_W)\frac{P}{a} \tag{83}$$

If $P > a$, the penetration depth p is equal to a

$$I(\Theta_W) = J_c(\Theta_W)a\frac{2\ell}{n} = I_c(\Theta_W) \tag{84}$$

$$I_{tot} = \frac{I}{2} + \sqrt{\frac{I^2}{4} + I_{Res}^2} \tag{85}$$

For the application sketched on Fig. 2.

$$W_{mag} = \frac{1}{2} L_{cap} I_{tot}^2(\Theta_W) \tag{86}$$

In all cases

$$W_{tot}(\Theta_W) = \Delta H(\Theta_W) + \Delta H_{ins}(\Theta_W) + W_{mag}(\Theta_W) \tag{87}$$

The function W_{tot} is equal to our previous estimate of the capacitor energy when $\Theta_W = \Theta_c$. The maximum of the function $W_{tot}(\Theta_W)$ between Θ_0 and Θ_c is the term $W_{tot\ max}$. If we set

$$\frac{1}{2} C_{cap} V_{cap0}^2 > W_{tot,max} \tag{88}$$

we have a conservative estimate, (overestimate) of the capacitor energy needed.

10 Generalizations

There are other ways to build a superconducting switch than the rectangular wire, not inductively wound on a two layer coil. For these other applications, the important parameters mentioned in the above summary have been given general expressions that can be applied to these other cases. Whenever a formula mentions n, R, or ℓ that are specific to the example, it is equated to another expression that can be used in more general cases.

If the circuit can be wound and connected as in Fig. 1, the same study can be made as the one described above. Almost all the equations are the same. The resistance R_W is the sum of the individual resistances of the two halves of circuit shown on Fig. 1. The currents I, I_{Res} and I_{tot} refer to the currents from the capacitor circulating in one half of the circuit only. The current I_{tot} is only half the current drawn from the capacitor while L_{cap} has been defined as the inductance of the whole circuit seen from the capacitor connections. Therefore the magnetic

energy for the case shown on Fig. 1 is different. Equations (79) and (86) should be replaced by

$$\frac{1}{2}C_{cap}V_{cap0}^2 = \Delta H(\Theta_c) + \Delta H_{ins}(\Theta_c) + 2L_{cap}I_{res}^2 \tag{89}$$

$$W_{mag} = 2L_{cap}I_{tot}^2(\Theta_W) \tag{90}$$

In a circuit as in Fig. 1, the capacitor current runs in the same direction as the DC current for one half of the circuit and in opposite direction for the other half. The rules described in the above summary will insure enough energy on the capacitor to turn normal the half circuit where the currents run in the same direction. There might not be enough energy to turn the other one normal. After the current pulse, this other one may be left at a temperature larger than the ambient temperature Θ_0 but less than the critical temperature Θ_c. This may be no problem because the resistance of a half of the circuit may turn off the DC current quickly enough for the actual application. Moreover, the state of quench induced in one half of the circuit will generate heat that, if the insulator is thin enough, will soon be communicated to the other half and complete the job of bringing it to normality. This phenomenon is analogous to the phenomenon of quench back [3],[4].

The calculations made in this paper are not meant to be accurate. For the sake of simplicity, they rely on approximations that have been made in a conservative direction, i.e. in a direction that makes us overestimate the voltage needed on the capacitor. When the system is tested, one may very well find that much less voltage is sufficient to make the technique effective. Therefore the calculations above contain already a safety factor that is hard to estimate but that may be large.

11 Acknowledgements

The authors are indebted to R. Smits, M. Green, G. Gibson and J. Taylor for many discussions about this subject and Mrs. J. Barrera for a skillfull and tireless typing of this manuscript.

12 References

1. R.G. Smits, P.H. Eberhard, G.H. Gibson, M.A. Green, F. Kirsten, R.R. Ross, P. Salz and J.D. Taylor, Journal De Physique, 45, C1-653 (1984); LBL-16421 (1983).

2. For a description of the flux jumps, see for instance M.N. Wilson, Superconducting Magnets, Oxford Science Publications, Oxford University Press, p. 131 ff (1983).

3. M.A. Green, Ph.D Thesis, LBL-5350 (1977).

4. P.H. Eberhard, M.A. Green, W.B. Michael, J.D. Taylor and W.A. Wenzel, IEEE Trans. Mag-13, 78 (1977) and LBL-5364 (1977).

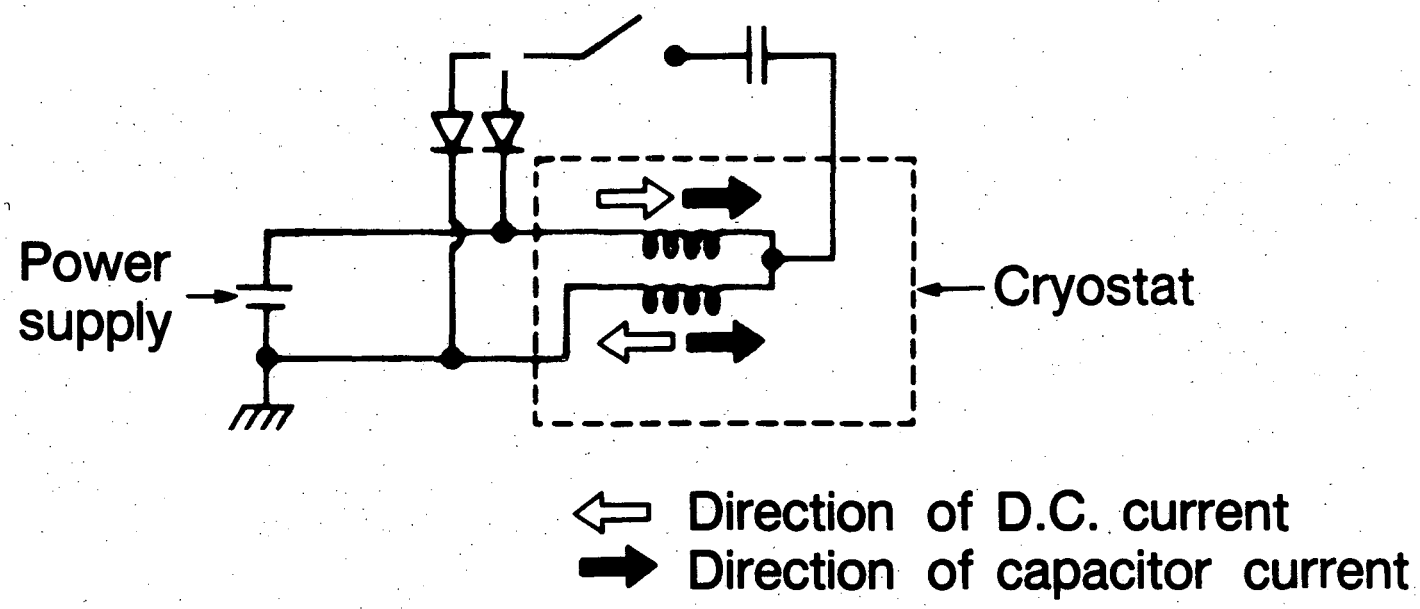

Fig. 1

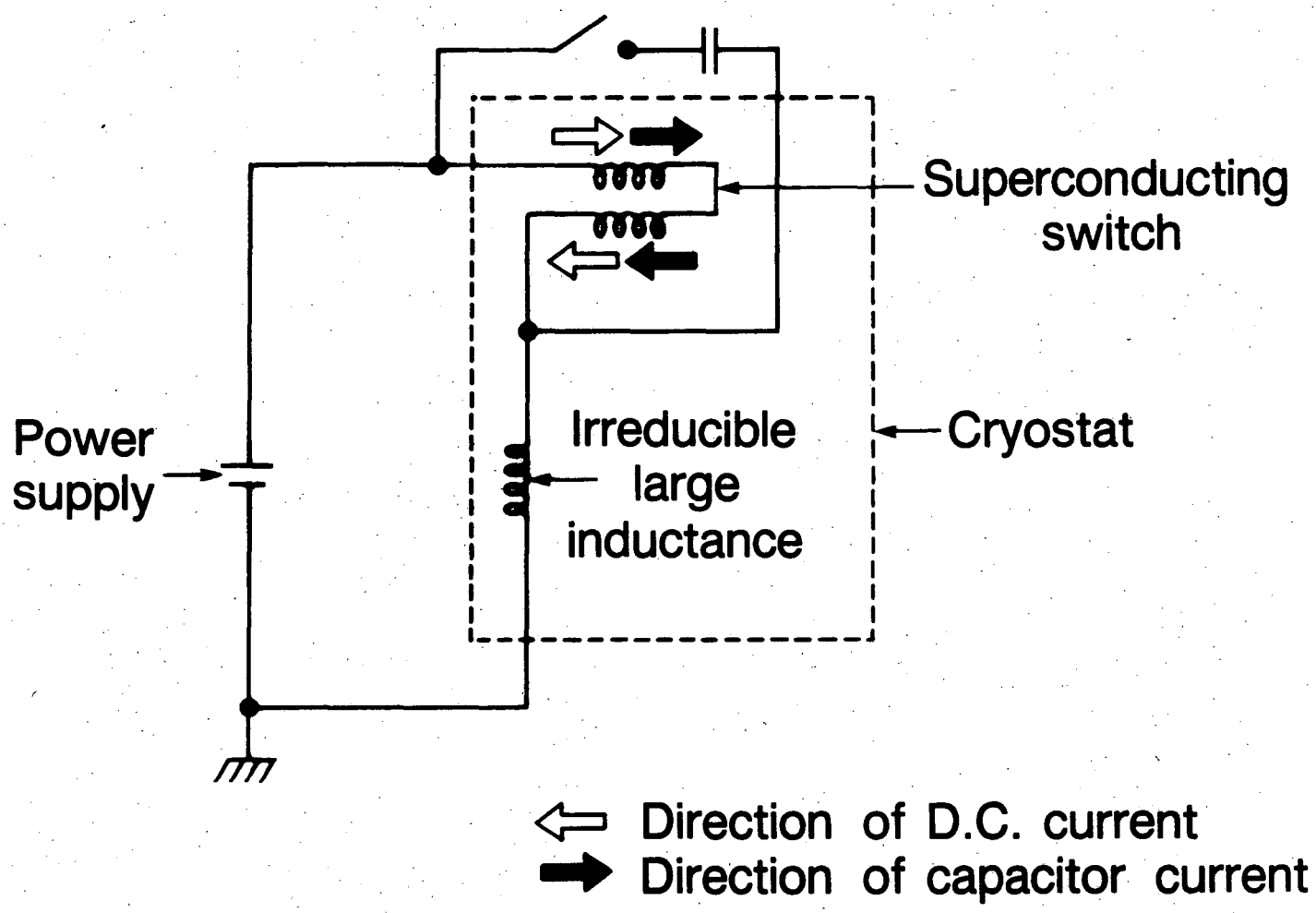

Fig. 2

XBL 858-8953

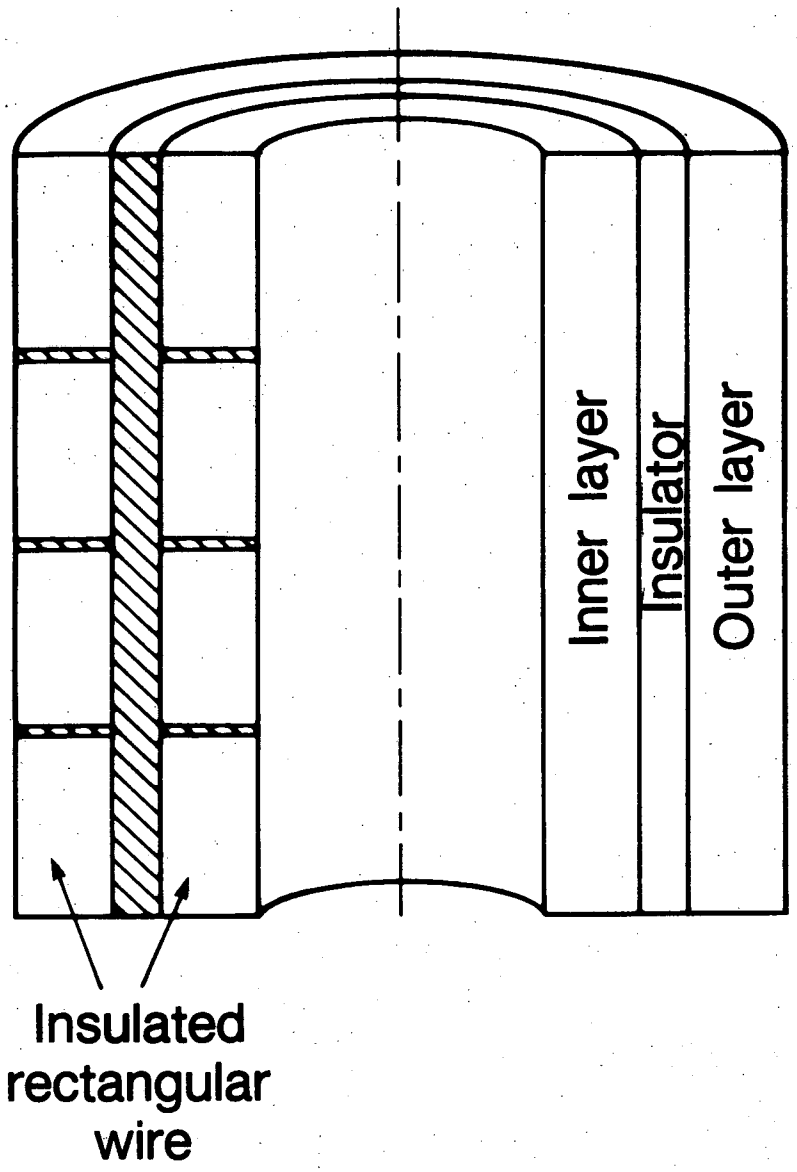

XBL 858-8952

Fig. 3

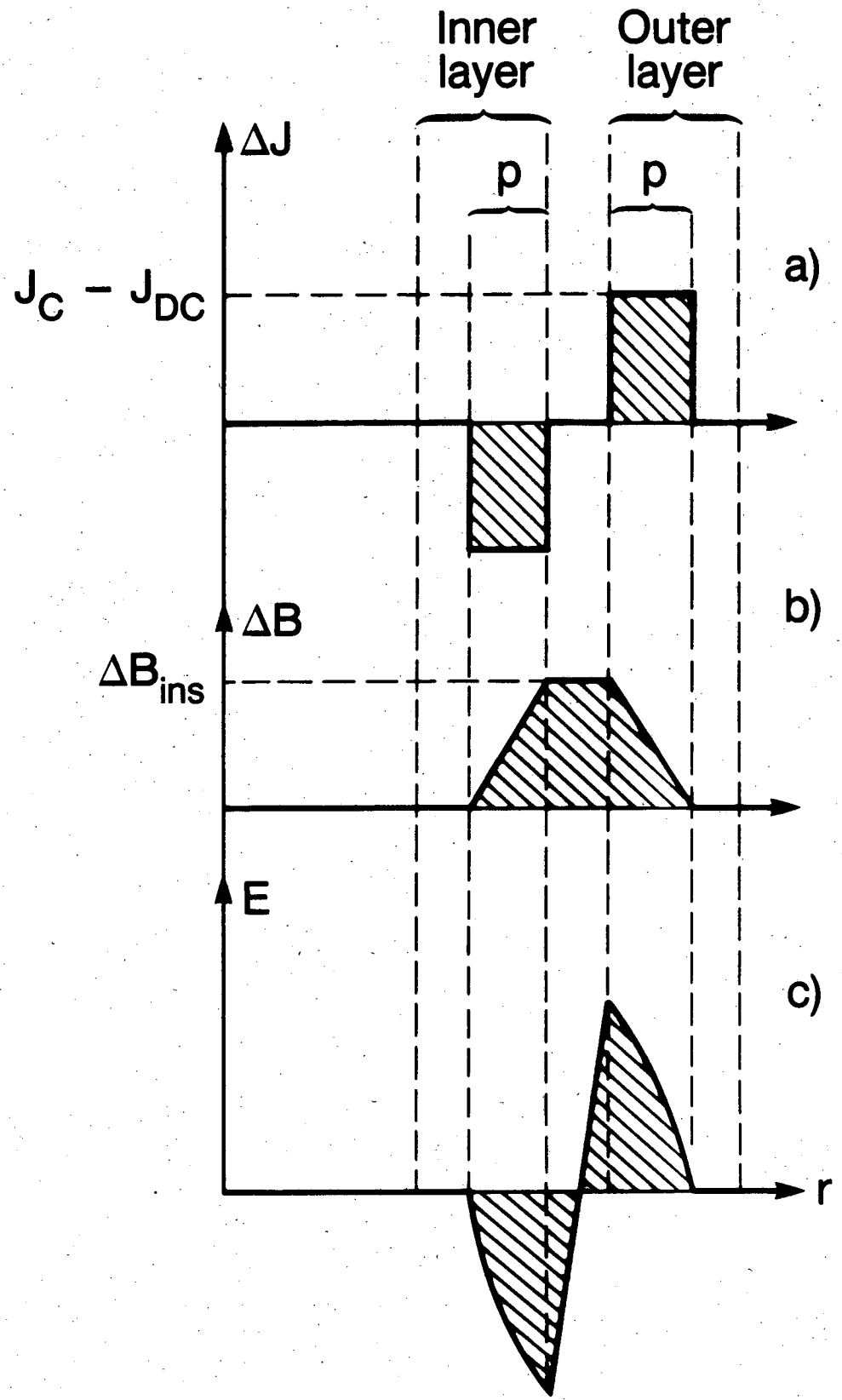

XBL 858-8951

Fig. 4

This report was done with support from the Department of Energy. Any conclusions or opinions expressed in this report represent solely those of the author(s) and not necessarily those of The Regents of the University of California, the Lawrence Berkeley Laboratory or the Department of Energy.

Reference to a company or product name does not imply approval or recommendation of the product by the University of California or the U.S. Department of Energy to the exclusion of others that may be suitable.

LAWRENCE BERKELEY LABORATORY
TECHNICAL INFORMATION DEPARTMENT
UNIVERSITY OF CALIFORNIA
BERKELEY, CALIFORNIA 94720