LBL-20173
Preprint c.2

# Lawrence Berkeley Laboratory
UNIVERSITY OF CALIFORNIA

## Materials & Molecular Research Division

RECEIVED
LAWRENCE
BERKELEY LABORATORY
FEB 26 1986
LIBRARY AND
DOCUMENTS SECTION

Submitted to Journal of Metals

SOFTWARE FEEDBACK CONTROL FOR MATERIALS TESTING SYSTEMS

B.Fultz, R. Kopa, and J.W. Morris, Jr.

November 1985

TWO-WEEK LOAN COPY
This is a Library Circulating Copy which may be borrowed for two weeks.

LBL-20173 c.2

Prepared for the U.S. Department of Energy under Contract DE-AC03-76SF00098

## DISCLAIMER

This document was prepared as an account of work sponsored by the United States Government. While this document is believed to contain correct information, neither the United States Government nor any agency thereof, nor the Regents of the University of California, nor any of their employees, makes any warranty, express or implied, or assumes any legal responsibility for the accuracy, completeness, or usefulness of any information, apparatus, product, or process disclosed, or represents that its use would not infringe privately owned rights. Reference herein to any specific commercial product, process, or service by its trade name, trademark, manufacturer, or otherwise, does not necessarily constitute or imply its endorsement, recommendation, or favoring by the United States Government or any agency thereof, or the Regents of the University of California. The views and opinions of authors expressed herein do not necessarily state or reflect those of the United States Government or any agency thereof or the Regents of the University of California.

# Software Feedback Control for Materials Testing Systems

**B. Fultz *, R. Kopa, and J. W. Morris, Jr.**

*Dept. of Materials Science and Mineral Engineering, University of California, and the Lawrence Berkeley Laboratory, Berkeley, Calif., 94720*

** Present Address: Keck Laboratory of Engineering Materials, California Institute of Technology, Pasadena, Calif., 91125.*

## Abstract

Feedback control has been used in materials testing systems for many years. More recently computer-interfaced systems have become available, in which parameters of a reference waveform generator and a differential amplifier are under computer control. The purpose of this note is to describe a new approach to feedback control that minimizes hardware in the feedback control process. Software in a digital microcomputer is used to implement the feedback control. In addition to reduced hardware requirements, unique capabilities of software feedback control are described with examples from tensile testing.

## Introduction

Feedback control makes possible many types of mechanical properties tests of materials. In the widely-used uniaxial tensile test, for example, feedback control makes it possible to deform a specimen at a constant rate of engineering strain. The feedback signal is provided by a strain gauge extensometer mounted on the specimen. The feedback signal is continuously compared to a steadily increasing reference signal. The difference between these two signals, defined as the strain error signal, controls a mechanical actuator that deforms the specimen so as to reduce the

strain error signal. By continuously reducing the error signal, the engineering strain of the specimen is forced to follow the reference signal. For many years the error signal has been obtained from analog electronic hardware that generates the reference signal and subtracts the feedback and reference signals. An analog differential amplifier and a reference signal generator are still used in all commercial computer-interfaced materials testing systems known to the authors. However, with modern computers all this hardware is unnecessary. Furthermore, when these functions are performed with software, new mechanical testing capabilities can be obtained.

## Necessity for an Invention

The authors have been investigating the mechanical behavior of materials at cryogenic temperatures. In one set of mechanical properties tests, we employed high magnetic fields to promote phase transformations in selected steels. In order to obtain very high magnetic field strengths, some of these tests were performed at the Francis Bitter National Magnet Laboratory in Cambridge, Massachusetts. We were forced to build a new materials testing system that was small, light, and transportable to the magnet laboratory for these experiments. The cryostat for cooling the specimen was tall and narrow, and required that the specimen was mounted on long mechanical extensions. This resulted in a large elastic compliance of the load frame. Strain gauge extensometers are not reliable in high magnetic fields, and it was necessary to perform the tests under stroke (position of the mechanical actuator) control. Unfortunately, because of the large elastic compliance of the load frame, the stroke differs from the elongation of the specimen, and stress-strain data obtained under stroke control are distorted. This specific problem, and our frequent need for new types of materials tests, led us to explore new methods of feedback control for our new materials testing system.

We wanted a feedback control system that would actively correct for the compliant elongation of the load frame. The stretching of the load frame is proportional to the applied load, and is described by an elastic compliance constant. This compliance can easily be measured and can be used to convert a stress-stroke curve into a stress-strain curve after the test. However, we needed to perform these corrections *during* the test so that our specimens would be deformed at a constant strain rate. We first considered using additional analog electronics in the feedback control loop. The load signal could be amplified by an amount dependent on the machine compliance, and this signal would represent the stretching of the load frame. A second differential amplifier would subtract this stretching signal from the stroke signal to determine the actual elongation of the specimen, and this new elongation signal would be used for feedback control. We believe that this analog scheme could have worked, but the increased complexity of the electronics and expected difficulties with noise and calibrations led us to take a completely different approach.

## Operation of a Prototype System

We chose to use software to actively correct for the effects of elastic compliance of the load frame. In this way we were able to perform tensile tests at a constant strain rate without a strain gauge extensometer on the specimen. This method may be of interest to anyone performing mechanical tests in hostile specimen environments, and is now described for the hardware shown in Fig. 1. An iteration of the feedback control loop begins when both load and stroke information are supplied to the control software in numerical form. The stroke is obtained from the number of steps taken by the stepper motor, and the load is obtained from an analog-to-digital converter. The elastic compliance of the load frame, measured previously, is multiplied by the value of the load to determine the present elongation of the load frame. The software subtracts this elongation of the load frame from the stroke signal to calculate the elongation of the specimen and the engineering strain. This calculated elongation of the specimen is used for feedback control by comparison with a software-generated reference elongation. The software subtracts this calculated elongation from the reference elongation to determine the strain error, and the software then decides whether to increment the actuator, decrement it, or take no action. The next iteration of feedback control then begins, and this process of feedback control runs continuously during the tensile test.

A demonstration of the software compliance correction is presented in Fig. 2 for two similar tensile specimens of 6061-T6 aluminum. No machine compliance correction was used by the control software for obtaining the stress-time curve in Fig. 2a, and the measured elastic modulus determined from Fig. 2a was $1.7\times10^6$ psi. A compliance correction of about 10 % less than the measured machine compliance was used for obtaining the stress-time curve in Fig. 2b., and the measured elastic modulus from Fig. 2b was $8\times10^6$ psi. The actual elastic modulus of 6061-T6 aluminum is about $10.5\times10^6$ psi. The on-line compliance correction succeeded in correcting for the major part of the machine compliance. The correction was not perfect because noise problems are magnified in this procedure. However, with a mechanical frame of greater stiffness this method may even be used to provide accurate elastic modulus data.

A photograph of our prototype system*, which uses a screw-driven actuator moved by a stepper motor, is shown in Fig. 3. It has been in operation for over one year, and has exhibited no problems that are inherent to software feedback control. The system proved adaptable for other applications. After the cryogenic experiments were completed, the software was modified for stress-relaxation experiments in solders. In developing new applications many electro-mechanical problems with the system, including several problems with mechanical vibrations, were solved merely by changes in software.

* The authors will be pleased to provide software listings and drawings of electronic and mechanical components upon request.

## Discussion

Software feedback control offers three general advantages over conventional feedback control systems relying on analog electronics. 1.) Software feedback control requires less hardware. A block diagram of a conventional computer-interfaced materials testing system is shown in Fig. 4. The reference function generator and the differential amplifier seen in Fig. 4 are unnecessary for software feedback control (c.f. Fig. 1). 2.) Software feedback control offers the flexibility to make major changes in materials tests with changes only in software, so sophisticated tests can be conveniently implemented with no new hardware. For example, with software feedback control it is possible to perform tensile tests in which the specimen is pulled at a constant rate of *true* strain. (Such an experiment would require very sophisticated analog hardware.) In software feedback control the reference waveforms are functions generated by software, so reference waveforms of arbitrary complexity can be generated without difficulty. All information in the test passes through the software, so it is easy to control the test on the basis of multiple conditions (such as deforming the specimen at a constant rate of mechanical work), or reschedule parameters of the test on the fly (such as changing the strain rate when the error signal becomes too large). 3.) For some applications, software feedback control is already more economical than conventional methods of feedback control. Because the control signals are numbers, high accuracy and good noise immunity are achieved without special techniques. With active corrections for the elasticity of the load frame, the mechanical rigidity requirements for the frame can be relaxed, lowering the mechanical costs as well. Software feedback control will become even more attractive with the improving price/performance ratio of microcomputer systems.

A screw-driven system is inherently slow, and is often unsuitable for fatigue tests. In the next year we plan to construct a more advanced system using a hydraulic actuator. We hope to achieve feedback control with two feedback signals at a 10 kHz sampling rate. This system is expected to have the quick mechanical response of current servo-hydraulic materials testing systems, as well as the added benefits of software feedback control.

## Conclusion

Software feedback control for mechanical testing systems is a viable alternative to conventional feedback control with an analog differential amplifier. We are confident that it will be widely used in the future.

## Acknowledgements

The authors acknowledge the assistance of G. O. Fior and E. N. C. Dalder.

This work was supported by the Director, Office of Energy Research, Office of Basic Energy Science, Materials Science Division and the Office of Development and Technology, Magnetic Systems Division of the U. S. Dept. of Energy under contract # DE-AC03-76SF00098 and # W-7405-Eng-48.

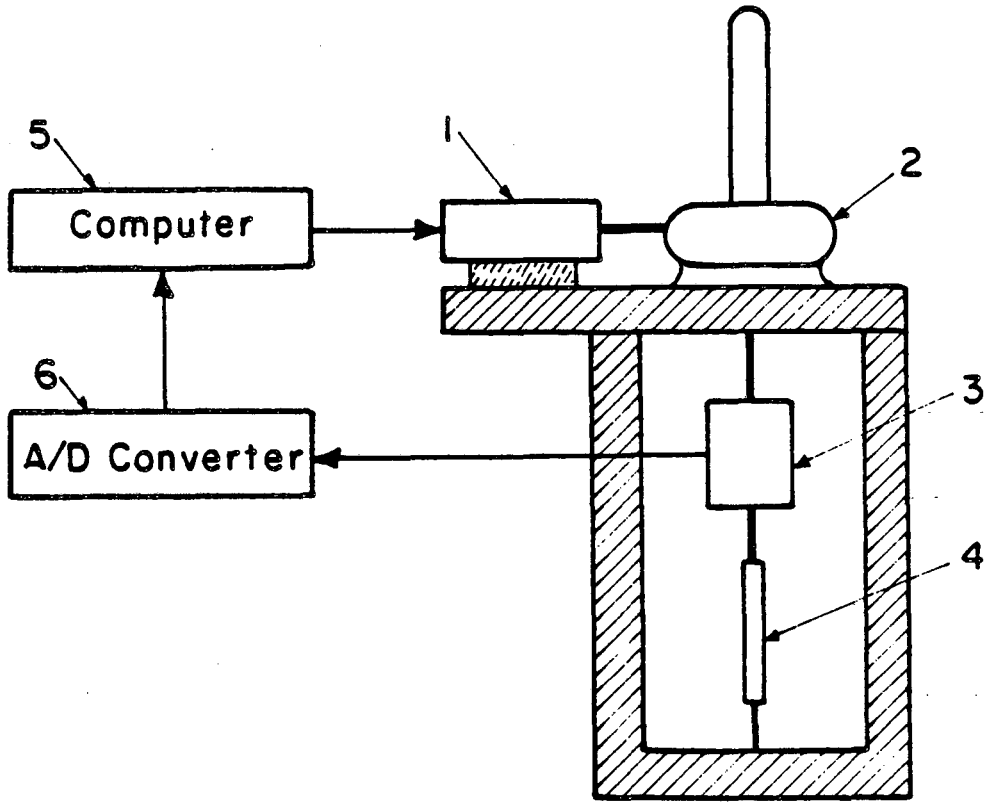


XBL 852-5834

Fig. 1) Block diagram of our prototype materials testing system using software feedback control.
1: stepper motor, 2: actuator, 3: load cell, 4: specimen, 5: computer, 6: analog-digital converter

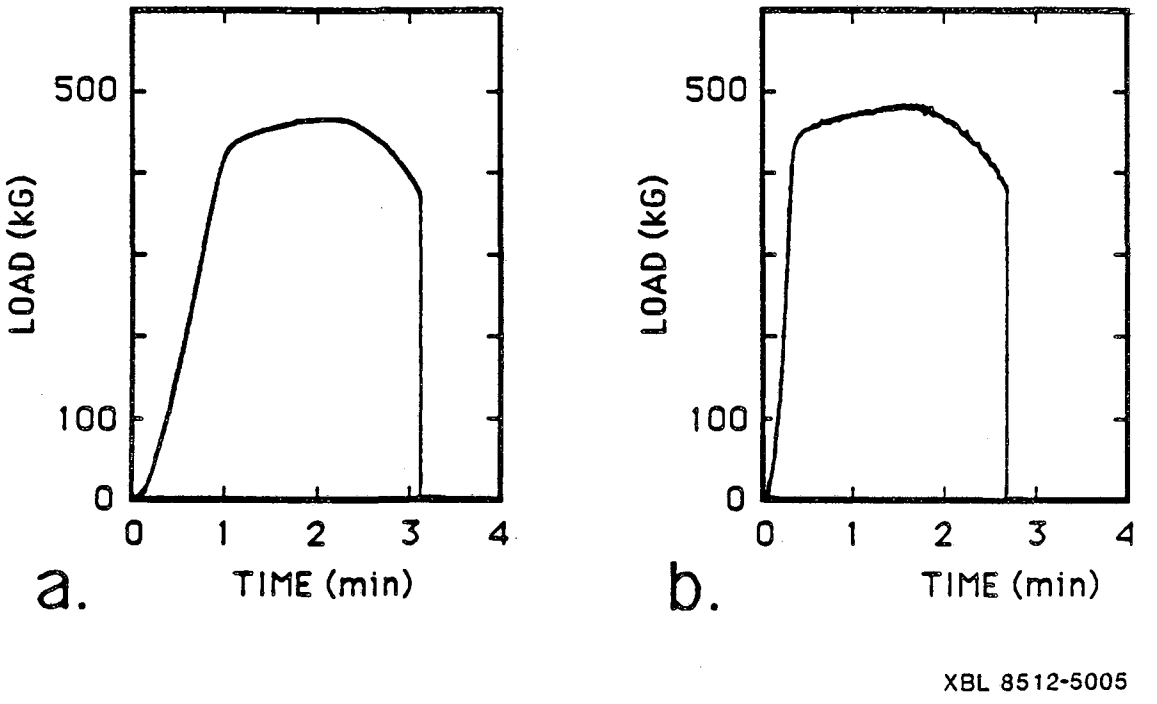


Fig. 2) Load vs. time data from two similar specimens of 6061-T6 aluminum tested at room temperature. a.) No machine compliance correction. b.) Machine compliance 90 % corrected (see text).

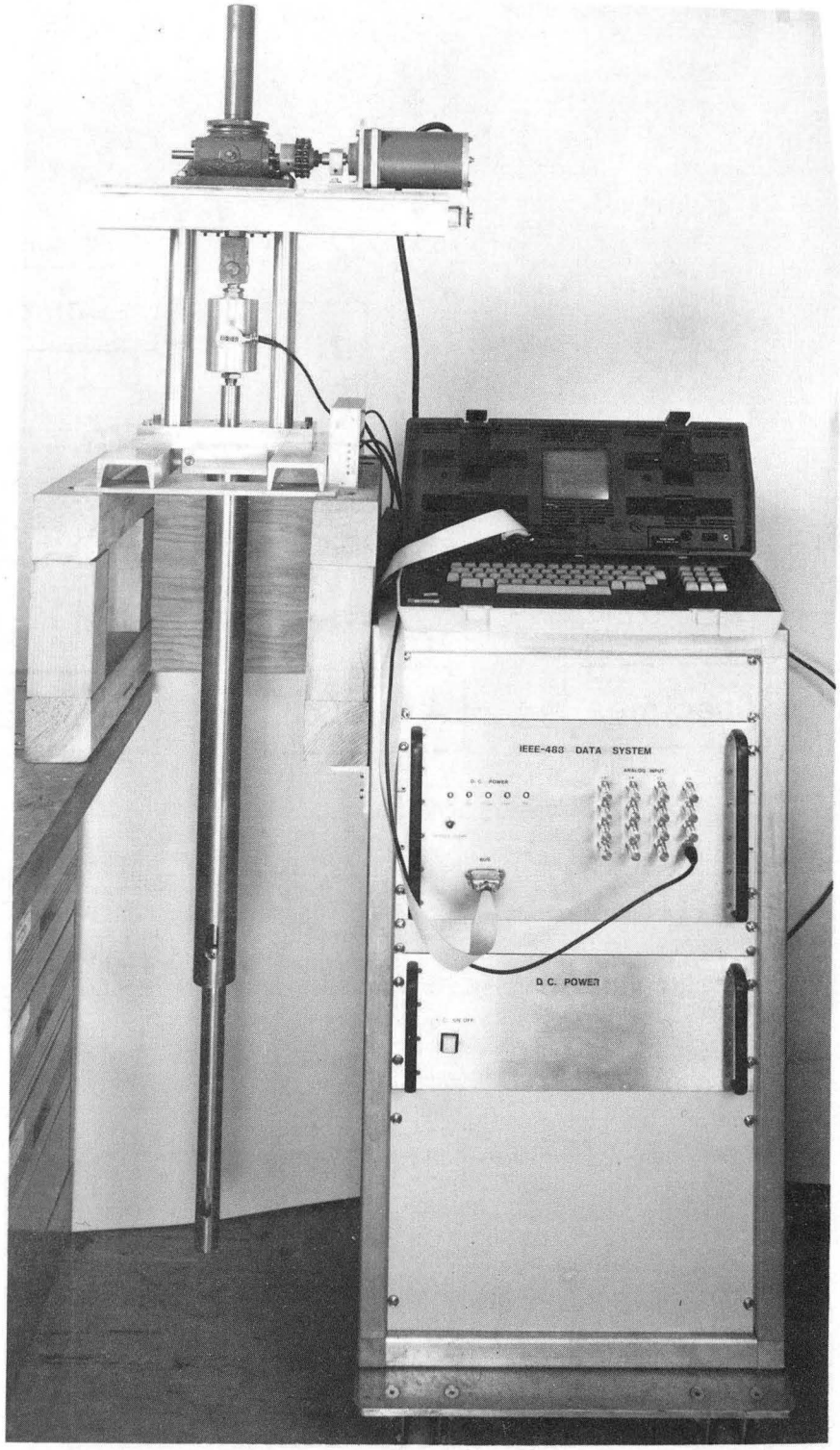


CBB 848-6080

Fig. 3) Photograph of our prototype materials testing system with software feedback control, as constructed for cryogenic tests in high magnetic fields.

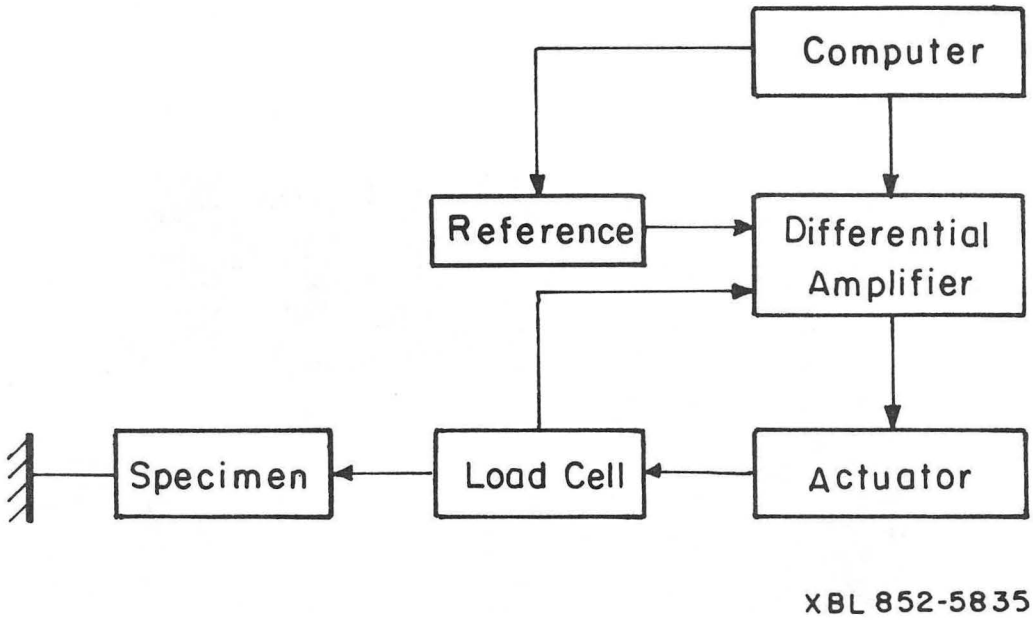


Fig. 4) Computer interface for a materials testing system with analog differential amplifier control.

This report was done with support from the Department of Energy. Any conclusions or opinions expressed in this report represent solely those of the author(s) and not necessarily those of The Regents of the University of California, the Lawrence Berkeley Laboratory or the Department of Energy.

Reference to a company or product name does not imply approval or recommendation of the product by the University of California or the U.S. Department of Energy to the exclusion of others that may be suitable.

*LAWRENCE BERKELEY LABORATORY*
*TECHNICAL INFORMATION DEPARTMENT*
*UNIVERSITY OF CALIFORNIA*
*BERKELEY, CALIFORNIA 94720*