LBL-20174
c.2

Lawrence Berkeley Laboratory

UNIVERSITY OF CALIFORNIA

RECEIVED
LAWRENCE
BERKELEY LABORATORY
NOV 4 1985
LIBRARY AND
DOCUMENTS SECTION

Engineering Division

Invited talk presented at the International Conference on X-Ray and VUV Synchrotron Radiation Instrumentation, Stanford, CA, July 29-August 2, 1985

CONCEPTS FOR INSERTION DEVICES THAT WILL PRODUCE HIGH-QUALITY SYNCHROTRON RADIATION

K. Halbach

July 1985

TWO-WEEK LOAN COPY

This is a Library Circulating Copy which may be borrowed for two weeks.

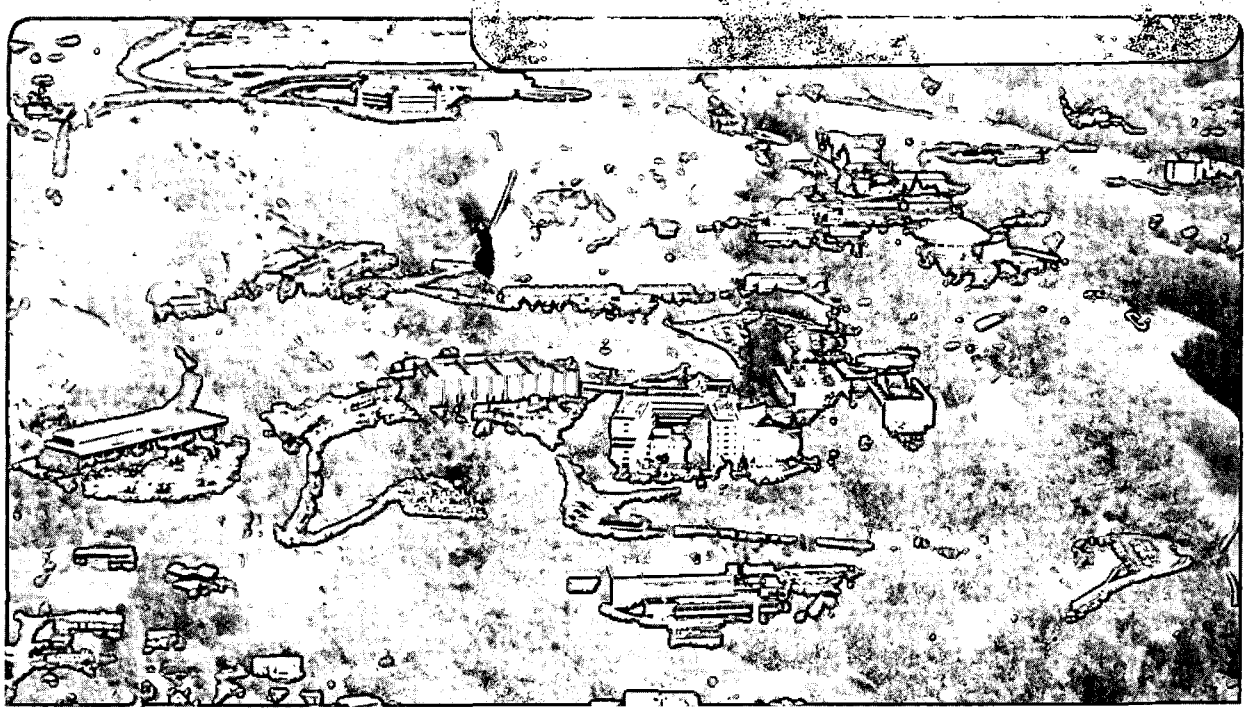

Prepared for the U.S. Department of Energy under Contract DE-AC03-76SF00098

LBL-20174
c.2

DISCLAIMER

This document was prepared as an account of work sponsored by the United States Government. While this document is believed to contain correct information, neither the United States Government nor any agency thereof, nor the Regents of the University of California, nor any of their employees, makes any warranty, express or implied, or assumes any legal responsibility for the accuracy, completeness, or usefulness of any information, apparatus, product, or process disclosed, or represents that its use would not infringe privately owned rights. Reference herein to any specific commercial product, process, or service by its trade name, trademark, manufacturer, or otherwise, does not necessarily constitute or imply its endorsement, recommendation, or favoring by the United States Government or any agency thereof, or the Regents of the University of California. The views and opinions of authors expressed herein do not necessarily state or reflect those of the United States Government or any agency thereof or the Regents of the University of California.

LBL-20174

Concepts for Insertion Devices that will Produce High-Quality Synchrotron Radiation

by

K. Halbach
Center for X-Ray Optics
Lawrence Berkeley Laboratory
University of California
Berkeley, CA 94720

Invited Talk presented at the
International Conference on X-Ray and VUV
Synchrotron Radiation Instrumentation
July 29 - August 2, 1985
Stanford University, Stanford CA

This work was supported by the U.S. Department of Energy
under Contract DE-AC03-76SF00098.

ABSTRACT

A simple analysis is presented that shows what effect the two major construction tolerances have on the field distribution in undulators, and it is shown that the consequential effects on the synchrotron radiation spectrum depend strongly on the type of undulator. A number of new conceptual undulator designs are described that allow electromagnetic correction of the field distribution in these undulators.

1) Introduction

It has been shown by B.M. Kincaid[1] that for synchrotron light produced by relativistic electrons in an undulator (U), the most damaging error caused by an individual defect in an U is an error field whose integral over the electron trajectory does not vanish. This applies in particular to the generation of high order harmonics in a long U. This theory breaks down when that integral vanishes. But even in that case, field errors can cause trajectory length errors, which result in phase shifts that will reduce the center amplitude and broaden spectral lines.

If $x_0'(Z)$ represents the unperturbed angle between the trajectory and the z-axis, and if

$$\Delta x'(Z) = \int_{-\infty}^{Z} \Delta B(z)dz/(p/e) \tag{1}$$

is the perturbation of that angle due to the field perturbation $\Delta B(z)$, then the trajectory length perturbation Δs is given in good approximation by

$$\Delta s(Z) = \int_{-\infty}^{Z} (x_0'(z) \cdot \Delta x'(z) + .5 \cdot \Delta x'^2(z))\, dz. \tag{2}$$

It is clear from Equation (1) and Equation (2) that $\Delta s(\infty)$ will in general be nonzero, even if $\Delta x'(\infty) = 0$. It follows also from equation (2) that if one wants to correct phase shifts caused by field errors without changing the structure of the U, the simplest way is to increase or decrease over a number of periods the amplitude of the sinusoidal fields produced by the U. Field patterns for such field changes that do not cause other undesirable effects will be described elsewhere [2].

In order to be able to make intelligent choices among the magnetic structures commonly used as U's, the effects of the most important construction errors caused by finite construction tolerances on the magnetic

field distribution of the U will be discussed in Section 2. Since it is clear that for very long U's the necessary tight tolerances will not be achievable in the foreseeable future, one has to consider active, preferably electromagnetic (EM) methods to correct the fields in a long U. In Section 3, a number of concepts for such devices will be discussed. Since the magnitude and nature of corrections is probably most easily determined by looking at the spectrum produced by electrons in the U, an EM U is, from that point of view, the preferable device, since sections of the U can be turned off. In Section 3, a conceptual design for an EM device will also be described that has the potential to produce fields as large as those of the permanent magnet (PM) hybrid structures that have been described elsewhere.[3] While I have shown and stressed in a number of publications (for instance, Reference 3) that for small gaps and periods PM structures produce larger fields than EM magnets, this new concept does not violate these statements, it merely extends the region of parameter space that can be reached with EM devices to smaller dimensions.

2) Description of Field Errors Caused by some Finite Construction Tolerances

In order to explain the concepts in a simple manner, I assume that the U is sufficiently wide so that the magnetic fields produced by the U do not depend on the transverse space coordinate in the bend plane of the electron trajectories, i.e. I assume two dimensional fields.

The error fields can then be uniquely broken up into error fields that are perpendicular to the midplane in the midplane, and error fields that are parallel to the midplane in the midplane. The latter are ignored throughout since they are essentially parallel to the electron trajectories (unless they are far off the midplane).

For completeness, I discuss first briefly the effect of magnetization tolerances in an ironless U of the design shown in Figure 1, using charge sheet equivalent material (CSEM) such as rare earth cobalt (REC). To minimize $\Delta x'(\infty)$, one can show that the blocks should be sorted and placed within a period such that the sum of the magnetization strengths of the blocks with the easy axis perpendicular to the Z-direction is to be as constant as possible, while the direction of the easy axis for those blocks is not very important. Conversely, for the blocks magnetized parallel to the Z direction, the proper orientation of the easy axis is most important in order to minimize the sum of their magnetization perpendicular to the Z-axis, while their strength is only of secondary importance. Since the field errors produced by this type of magnet depend much more strongly on material properties than they do for magnets that contain soft iron, it is generally not advisable to use ironless magnets under circumstances where good field quality is important, and the rest of the discussion is restricted to magnets that use iron.

Figure 2 shows a conventional hybrid PM U. If the magnetization of a PM block between two poles is in error, the poles on the two sides of the PM block will have magnetic scalar potential errors of opposite signs, leading to $\Delta x'(\infty) = 0$, but $\Delta s(\infty) \neq 0$.

Figure 3 shows a schematic cross section of hybrid U with a magnetic scalar potential bus system. The bus system connects with soft iron all poles that are supposed to be on identical scalar potentials, in a manner similar to the shorting rings used in radio frequency quadrupoles (Reference 4). Figure 3 also shows some of the correction coils that can be used to change the

scalar potential of individual poles, or groups of poles, thus allowing to correct steering errors, displacement errors, and phase shifts. Because of the scaler potential bus system, errors in magnetization strength of the PM material do not lead to field errors.

In order to assess the field errors caused by an error in the gap between iron poles, I discuss the case of removing a small block of iron from the tip of an iron pole. To simplify the discussion I ignore saturation effects. In order to obtain the field errors, I proceed as follows (see Figure 4): I introduce an infinitesimally thin gap between the iron to be removed and the iron pole that is left. I then place a magnetic surface charge onto the surface of the iron to be removed. The charge density is equal to the B-field on the iron surface. By doing so, the surface of the iron to be removed is field free, so that the iron can be removed without changing the fields anywhere. The field change caused by the increase of the gap is therefore given by the fields produced by the removal of the surface charges or, equivalently, the addition of charges of opposite polarity.

For the purposes of this discussion, the resulting fields can be distinguished as follows: direct field lines that go to the midplane, and field lines that end on iron poles, as shown in Figure 4.

If the scalar potential of the poles is fixed, as in an EM or a hybrid with a scalar potential bus, the direct field is the only field that is "seen" by the electrons and leads to a $\Delta x'(\infty) \neq 0$ that can be computed. In a hybrid U with floating poles (as in Figure 2), however, the fieldlines that end on iron poles change their potential, and thus lead to indirect fields. Because of the absence of a net magnetic charge, the integral over all error fields

over the whole midplane has to vanish. From this, one might conclude that the integral over the indirect fields compensates exactly the integral over the direct fields. This, however, is not so, since the direct fields appear only in the gap region, while the indirect fields extend beyond that region, as shown in Figure 5. Even though the compensation of the direct field errors is incomplete, the steering error is much smaller in the case of floating iron poles than it is when the scalar potentials of the poles are frozen.

Summarizing, one can conclude that PM material magnitization errors cause no field errors in the case of a hybrid U with a scalar potential bus, and cause no steering error, but a phase shift in a hybrid U with floating poles. Gap errors cause both phase shift and steering errors for both magnets, but to a much smaller degree in the case of a hybrid U with floating poles. For that reason, which of the two systems is preferable depends on a great number of design details, at least if the use of EM correctors is not necessary.

3) Other Undulator Design Concepts with Correctors.

The hybrid U with scalar potential bus and correction coils shown schematically in Figure 3 allows the correction of all field errors, assuming the appropriate correction coils are present. However, if the U is designed to produce fields close to the limit given in Reference 3, the areas of poles on opposite potentials facing each other are rather large, requiring a large amount of iron in the bus structure if substantial corrections have to be made. In addition, the fields cannot be turned off. The following conceptual designs alleviate some of these problems and represent a logical sequence of combining the best features of PM and EM designs.

Figure 6 shows schematically a hybrid PM design that incorporates tuning/correction coils. An unpublished performance evaluation (Reference 5) shows that, particularly when the period is small, the performance of this structure is seriously reduced when one needs substantial correction currents.

Figure 7a shows schematically an EM design that uses a shaped pole and coil configuration that can significantly increase the achievable field level by decreasing the saturation of the iron at the base of the pole through shaping of the pole and the coil. But the saturation of the iron is still limiting the performance as the dimensions of the device decrease. This saturation can be reduced more by adding PM material at the lateral ends of the poles, as shown in Figure 7b. It should be noticed that in this PM assisted EM U, the PM only reduces the saturation in the iron, and therefore affects the field strength only at high field levels, and there only indirectly, the field level being controlled entirely by the current in the coils up to the high field level where the saturation of the iron finally limits the achievable field strength. Magnets of this type are under construction and perform the expectations.

Figure 8 shows schematically a PM assisted EM U that combines a number of the features and concepts of the U's described above. All the poles that are to be excited to a positive potential are going to one side, and the others going to the other side of the U, thus decreasing the areas of the poles facing each other and thereby decreasing the fluxes associated with main excitation and corrections. The positive and negative scalar potential buses are connected by an iron bridge that carries the coil that controls the main

pole excitation. It should be noticed that only one coil is needed for a large number of poles. In order to reduce saturation effects, PM material is placed between the poles of opposite polarity similar to the placement of CSEM in the hybrid U. CSEM can also be placed between the iron below the coil, thus reducing the flux there too. A number of different arrangements of correction and excitation coils are possible in this design. Somewhat different geometrical arrangements are also possible; the excitation coils could, for instance, also be placed with the iron bridge to the right and left of the U.

A preliminary evaluation shows that an U of this type can produce about the same (possibly even a little higher) fields than the straight hybrid U for periods larger than 1 - 2 cm. Even though the structure is more complicated than the conventional hybrid U, it allows turning sections of the U on and off, thus permitting an easy determination of necessary corrections from analysis of the synchrotron radiation spectrum. The results of a detailed analysis of the performance of this and the other U's discussed in this paper is in progress and will be published elsewhere.

4) Acknowledgments

During the development of the ideas described here, I had interactions with many people, but particularly stimulating discussions with D. Attwood, E. H. Hoyer, K-J. Kim, A. M. Sessler (LBL), G. A. Deis, D. Prosnitz, E. T. Scharlemann (LLNL), and last, but not least, B. M. Kincaid (AT&T).

References

1. B. M. Kincaid, Proceedings of this Conference; also J. Opt. Soc. B., to be published.

2. K. Halbach, to be published in Proceedings of Seventh International Free Electron Laser Conference (1985).

3. K. Halbach, Journal de Physique, 44, C1-211 (1983)

4. D. Howard, H. Lancaster, Proceedings of Seventh Conference on Application of Accelerators in Research and Industry (1982).

5. K. Halbach, ELF notes #93 and #94, LLNL (1984).

Figure 1. Pure CSEM U Cross Section

Figure 2. Hybrid U Cross Section

Figure 3. Hybrid U with Scalar Potential Bus

Figure 4. Effect of Gap Error

Figure 5. End View of Direct and Indirect Fields

Figure 6. Hybrid U with EM Correctors

Figure 7a. EM U with Shaped Pole and Coil

Figure 7b. PM Assisted EM U

Figure 8. EM U with PM Assist and Scalar Potential Bus

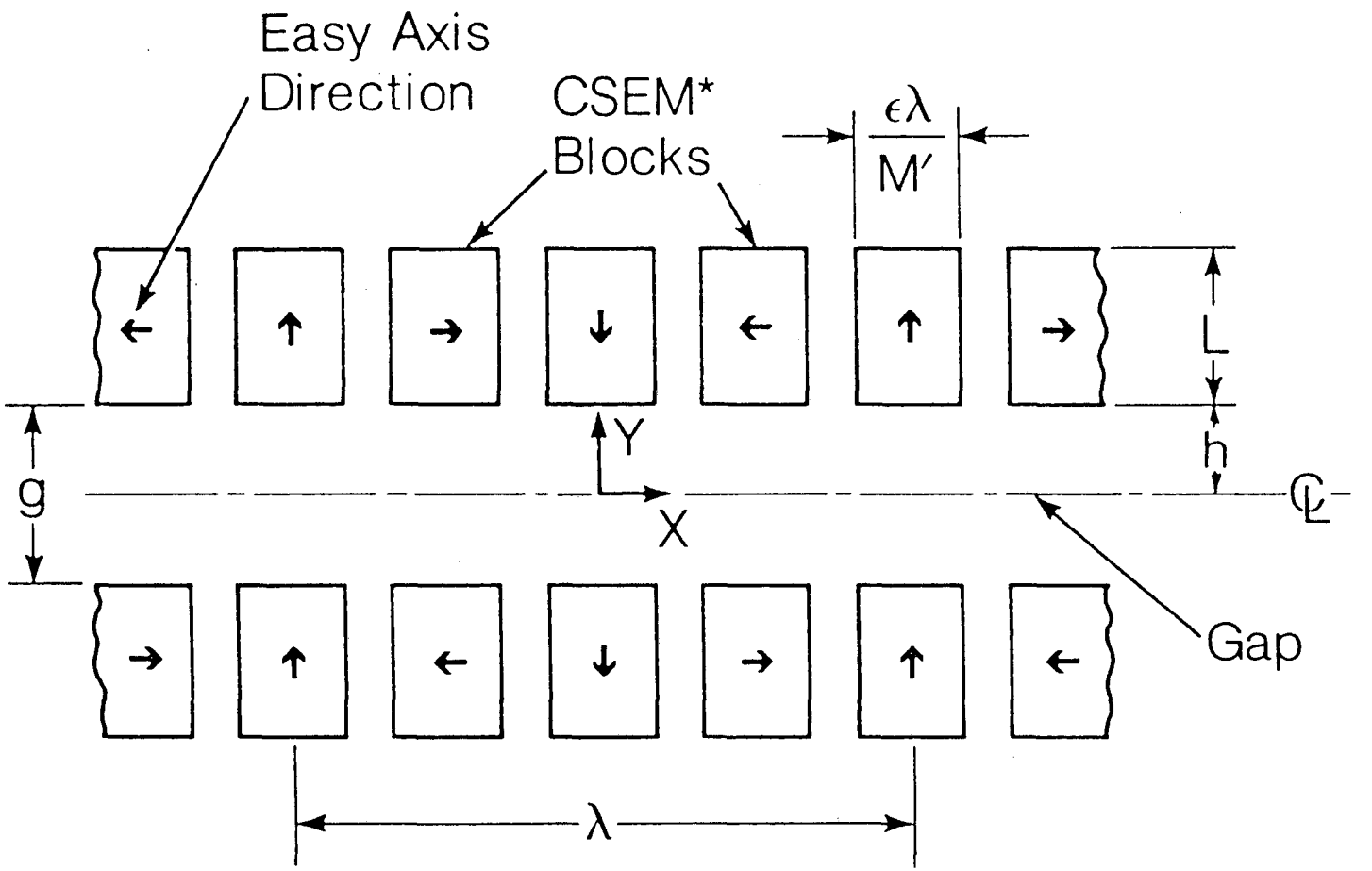

*Current Sheet Equivalent Material - e.g. REC

XBL 858-3719

Fig. 1

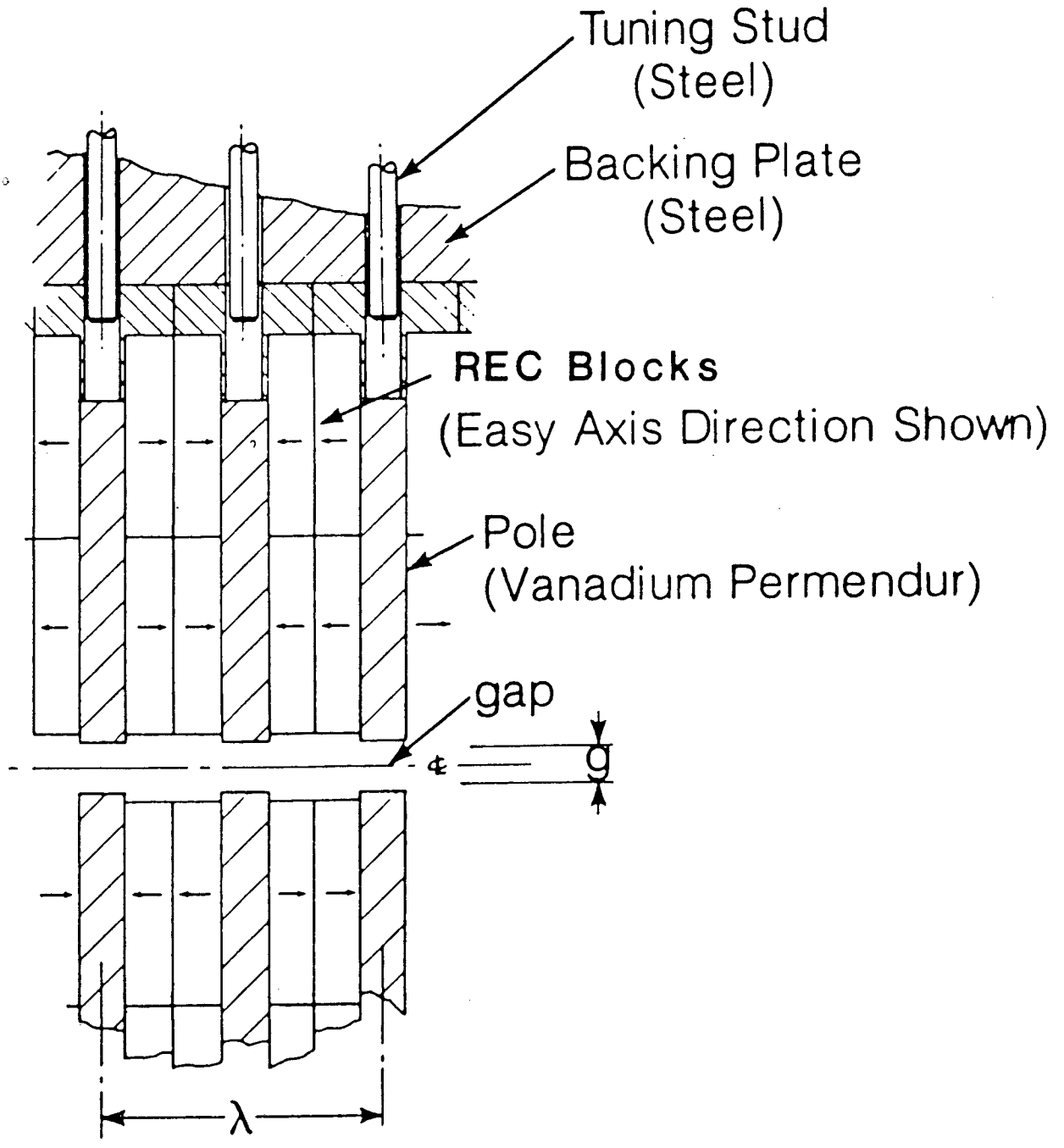

XBL 858-3717

Fig. 2

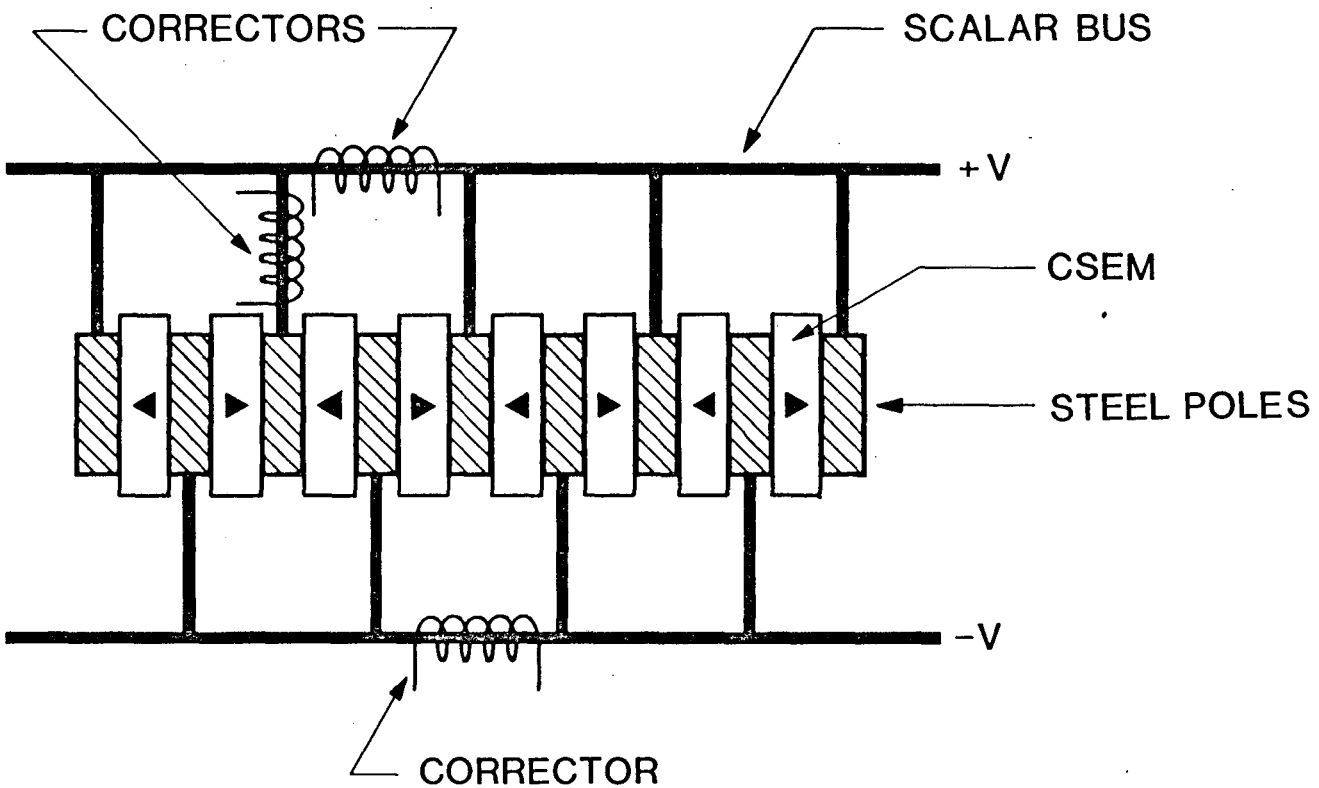

XBL 858-3712

Fig. 3

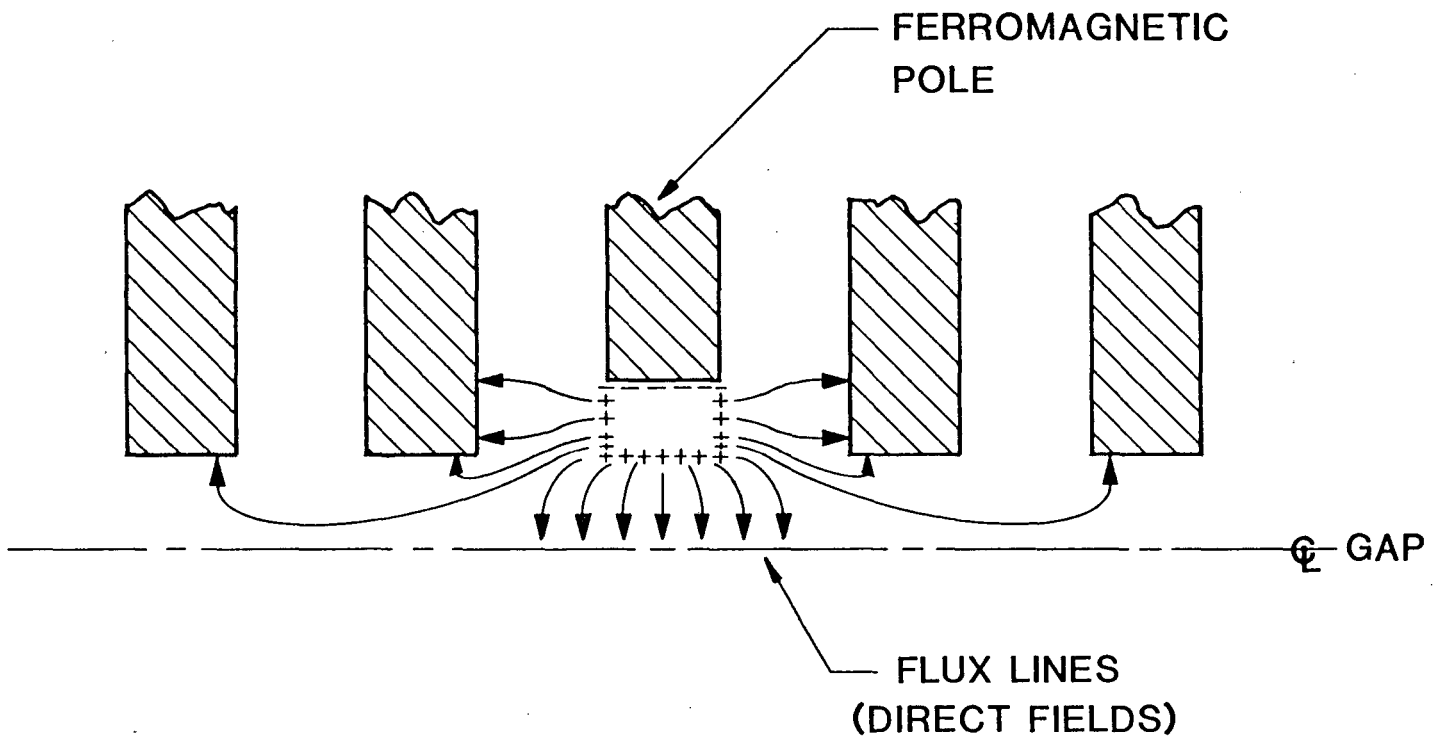

XBL 858-3711

Fig. 4

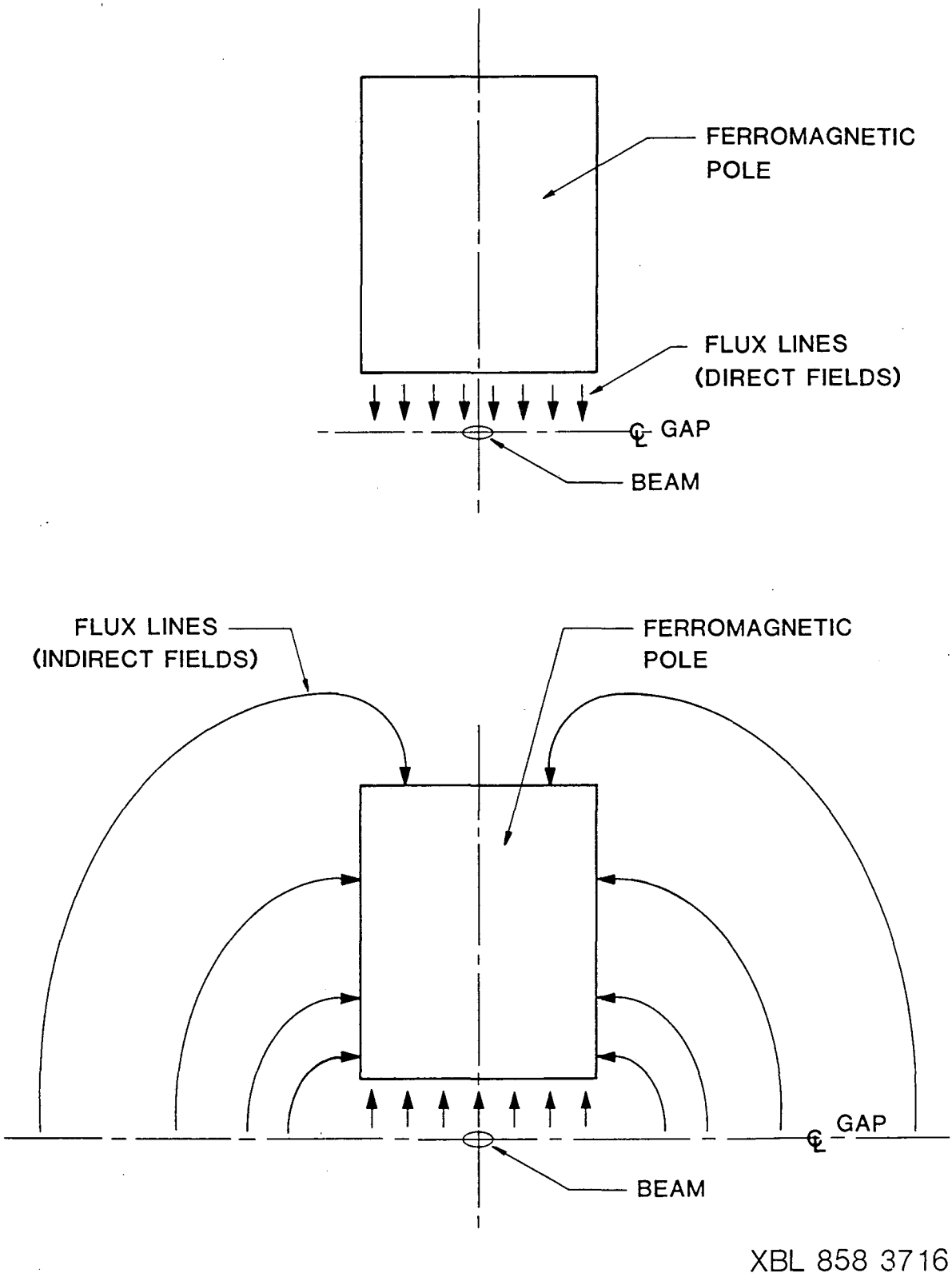

XBL 858 3716

Fig. 5

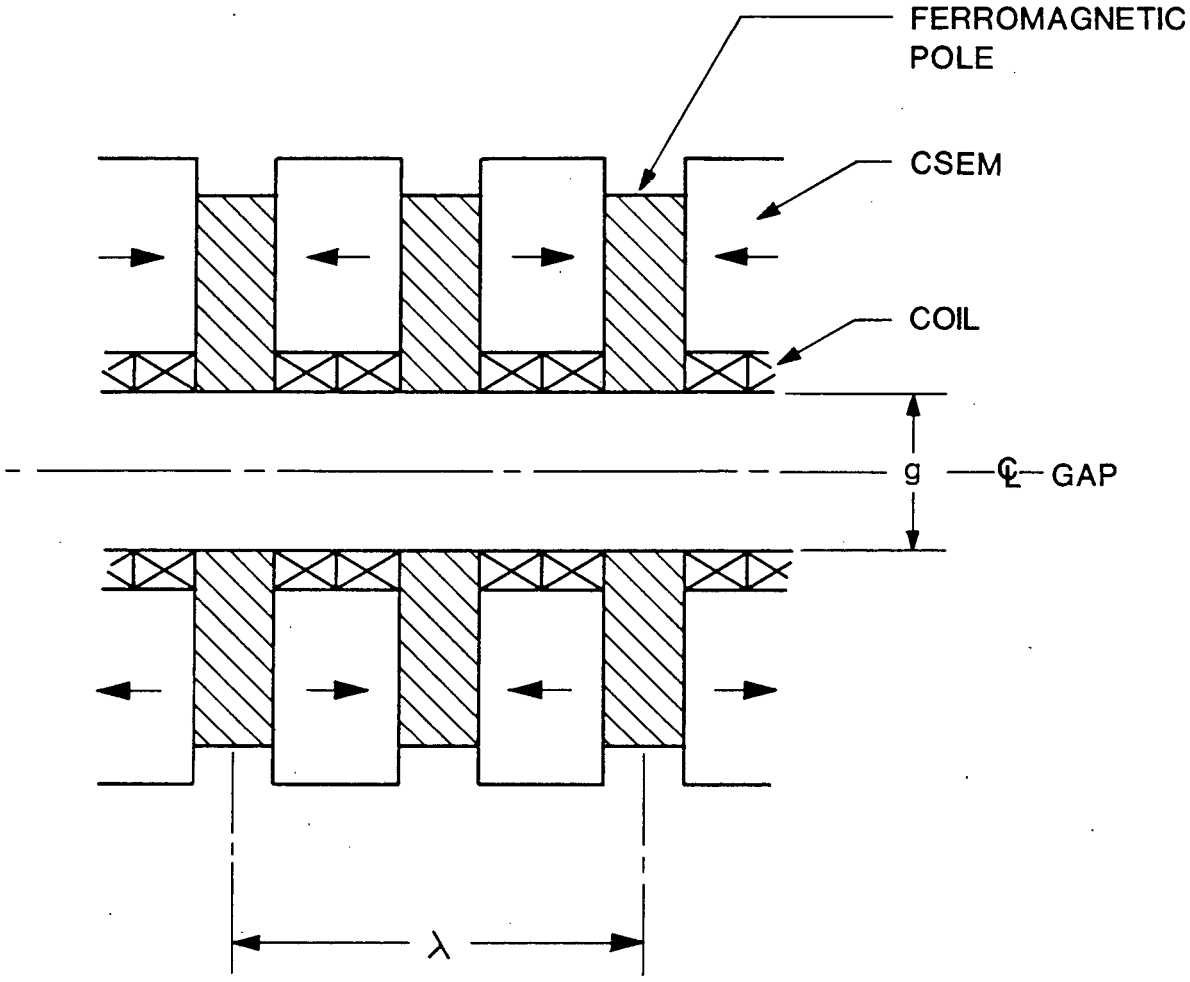

XBL 858-3718

Fig. 6

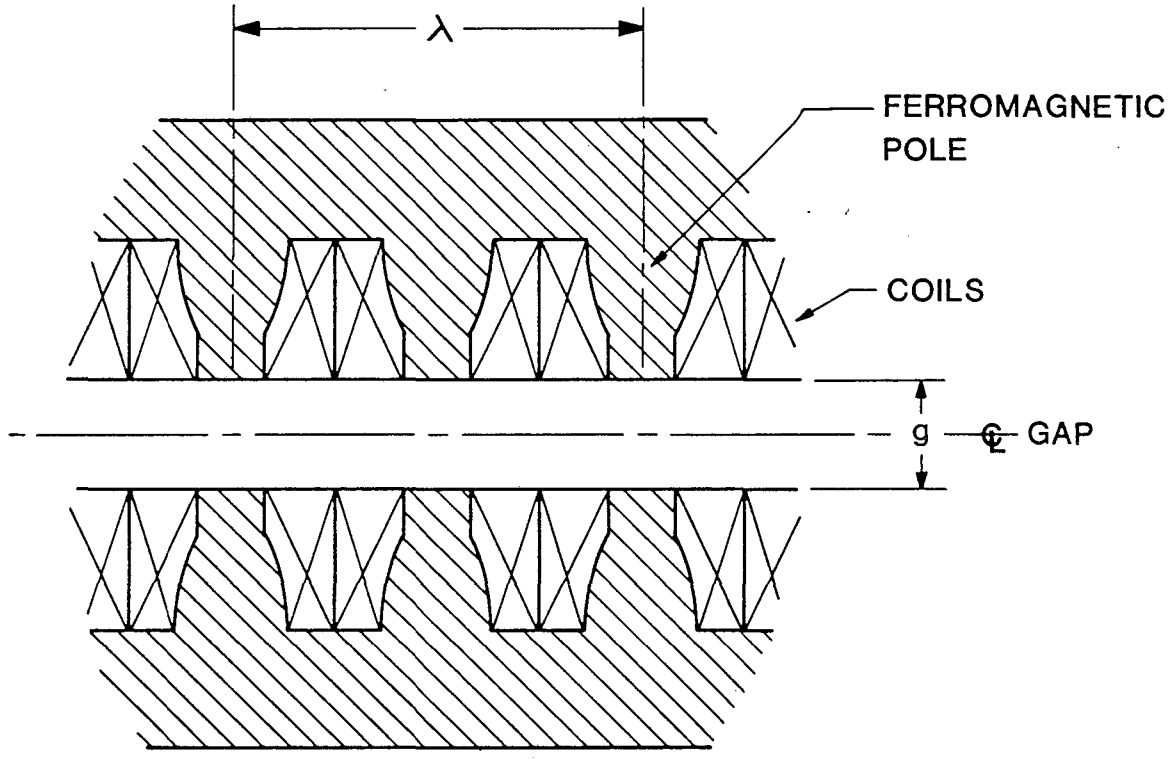

XBL 858-3713

Fig. 7a

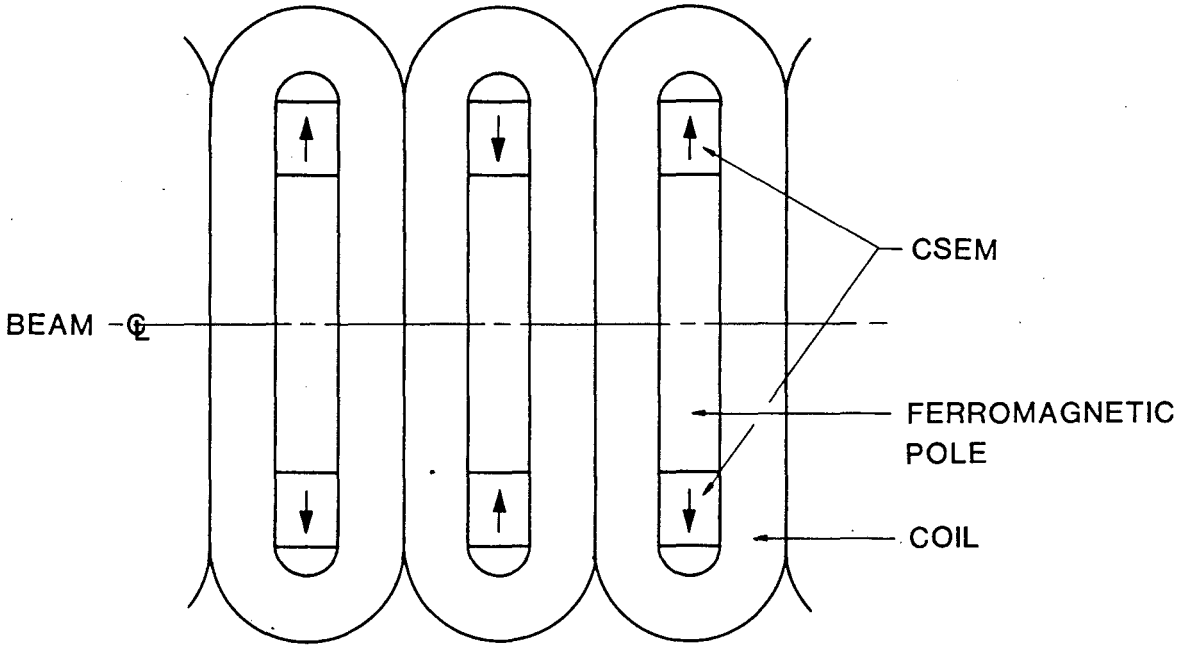

XBL 858-3714

Fig. 7b

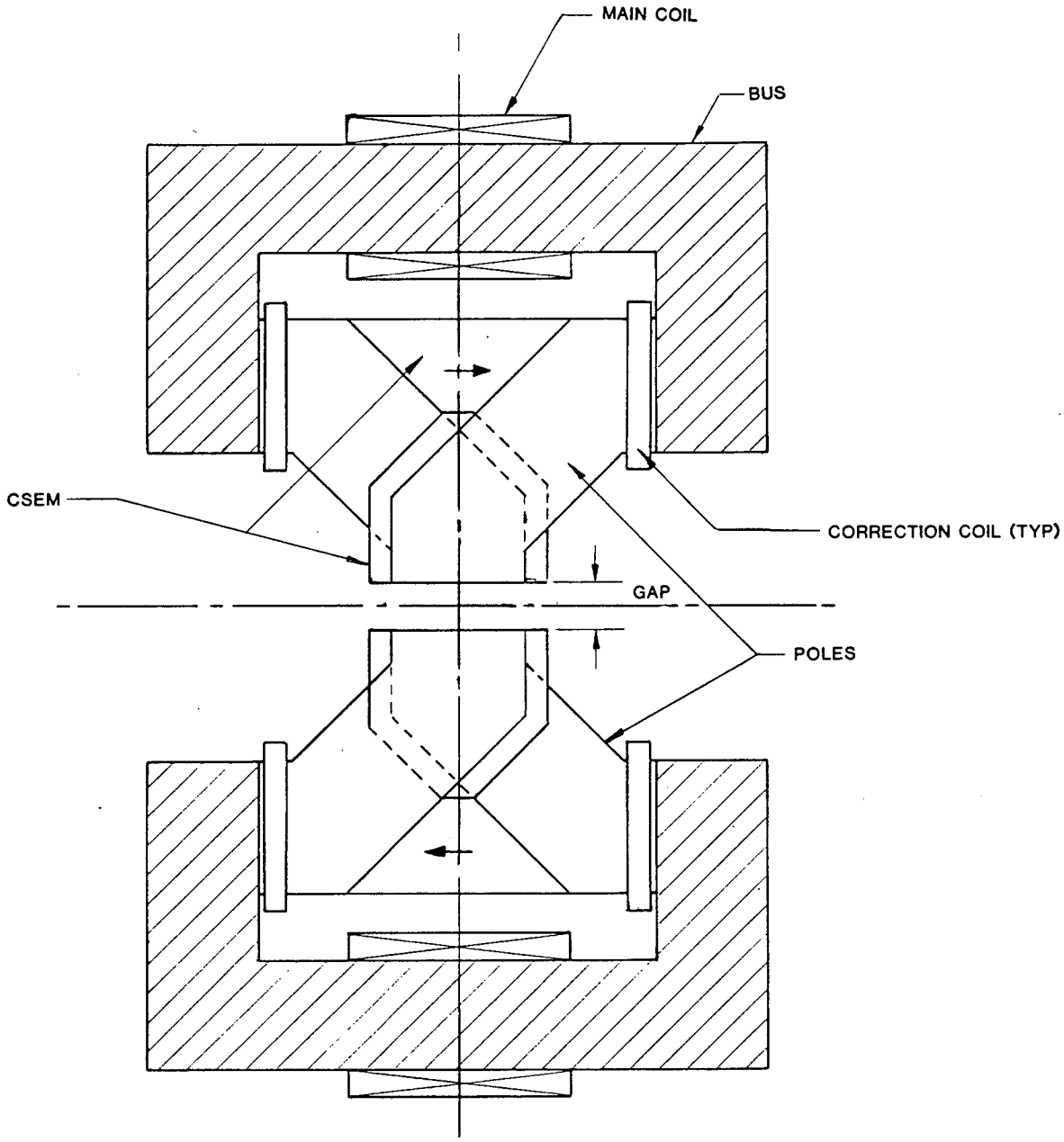

XBL 858 3715

Fig. 8

This report was done with support from the Department of Energy. Any conclusions or opinions expressed in this report represent solely those of the author(s) and not necessarily those of The Regents of the University of California, the Lawrence Berkeley Laboratory or the Department of Energy.

Reference to a company or product name does not imply approval or recommendation of the product by the University of California or the U.S. Department of Energy to the exclusion of others that may be suitable.

TECHNICAL INFORMATION DEPARTMENT
LAWRENCE BERKELEY LABORATORY
UNIVERSITY OF CALIFORNIA
BERKELEY, CALIFORNIA 94720