UC-4
LBL-20478
Preprint c.1

Lawrence Berkeley Laboratory
UNIVERSITY OF CALIFORNIA

Materials & Molecular Research Division

RECEIVED
LAWRENCE
BERKELEY LABORATORY
NOV 20 1985
LIBRARY AND
DOCUMENTS SECTION

Submitted to Acta Crystallographica Section A

DIGLYME ADDUCT OF DIPOTASSIUM
Bis(t-butyl[8]annulene)ytterbate(II)
$(CH_3OCH_2CH_2OCH_2CH_2OCH_3)_2K_2[CH_3)_3CC_8H_7]_2Yb$

S.A. Kinsley, A. Streitwieser, Jr.,
and A. Zalkin

October 1985

For Reference
Not to be taken from this room

LBL-20478 c.1

Prepared for the U.S. Department of Energy under Contract DE-AC03-76SF00098

DISCLAIMER

This document was prepared as an account of work sponsored by the United States Government. While this document is believed to contain correct information, neither the United States Government nor any agency thereof, nor the Regents of the University of California, nor any of their employees, makes any warranty, express or implied, or assumes any legal responsibility for the accuracy, completeness, or usefulness of any information, apparatus, product, or process disclosed, or represents that its use would not infringe privately owned rights. Reference herein to any specific commercial product, process, or service by its trade name, trademark, manufacturer, or otherwise, does not necessarily constitute or imply its endorsement, recommendation, or favoring by the United States Government or any agency thereof, or the Regents of the University of California. The views and opinions of authors expressed herein do not necessarily state or reflect those of the United States Government or any agency thereof or the Regents of the University of California.

Diglyme Adduct of Dipotassium Bis(t-butyl[8]annulene)ytterbate(II)

$(CH_3OCH_2CH_2OCH_2CH_2OCH_3)_2K_2[CH_3)_3CC_8H_7]_2Yb$

By Steven A. Kinsley, Andrew Streitwieser Jr. and Allan Zalkin

Molecular Research Division, Lawrence Berkeley Laboratory and

Department of Chemistry, University of California, Berkeley CA 94720

Abstract. M_r = 840.12, monoclinic, $P2_1/c$, a = 10.292(4), b = 20.588(6), c = 20.036(6) Å, β = 103.28(4)°, V = 4131.9 $Å^3$, Z = 4, D_x = 1.350 g cm^{-3}, λ(MoKα)=0.71073 Å, μ = 16.5 cm^{-1}, F(000) = 1728, T = 300 K, R = 0.032 for 3212 unique reflections with $F^2>3\sigma(F^2)$. The ytterbium atom is sandwiched between two parallel [8]annulene rings with a mean Yb-C distance of 2.77(4) Å. The potassium atoms cap the other sides of the rings at a mean K-C distance of 3.08(5) Å; each potassium atom is also coordinated to four oxygen atoms from the diglyme ligands at distances that range from 2.86 to 3.06 Å.

Experimental. Red, air sensitive crystals were sealed inside quartz capillaries under argon. Crystal 0.13 x 0.16 x 0.36 mm with 6 faces; modified Picker automatic diffractometer, graphite monochromator; cell dimensions from 32 reflections, $24° < 2\theta < 42°$; analytical absorption correction, range 1.19 to 1.39; max. $(\sin\theta)/\lambda = 0.54$ Å^{-1}, h -11 to 11, k 0 to 22, ℓ -21 to 21; three standard reflections, 6% variation in intensities from average, intensities adjusted accordingly; 10798 data, 5413 unique (including 2201, $F^2 < 3\sigma$), $R_{int} = 0.03$; structure solved by Patterson and Fourier methods; refined on F, 462 parameters; 14 cyclooctatetraene hydrogens refined with isotropic thermal parameters, remaining 46 hydrogen atoms in calculated positions and fixed isotropic thermal parameters; anisotropic thermal parameters for non-hydrogen atoms; R = 0.076 for 5413 data, R = 0.032 for 3212 reflections for which $F^2 > 3\sigma$, wR = 0.038, S = 1.34; $w = [\sigma(F)]^{-2}$, p = 0.04 in calc. of $\sigma(F^2)$; max (shift/σ) = 0.03; empirical extinction correction, $F_{corr} = (1 + 1.65\times10^{-7} I)$; max. and min. of ΔF synthesis 0.7 and -0.8 e Å^{-3}; atomic f for neutral Yb, K, O and C, and spherical bonded H from International Tables (1974); local unpublished programs and ORTEP (Johnson, 1965).

Atomic parameters are listed in Table 1,* and distances and angles are listed in Table 2. Fig.1 shows the molecule and numbering scheme.

---

*Lists of structure factors, anisotropic thermal parameters, calculated hydrogen positions, deviations from least-squares planes, distances and angles have been deposited with the British Library Lending Division as Supplementary Publication No. (27 pp.). Copies may be obtained through The Executive Secretary, International Union of Crystallography, 5 Abbey Square, Chester CH1 2HU, England.

Related literature. This compound is similar to the dimethoxyethane adduct of $K_2[Yb(C_8H_8)_2]$, (Kinsley, Streitwieser & Zalkin, 1985).

This work was supported by the Director, Office of Energy Research, Office of Basic Energy Sciences, Chemical Sciences Division of the U.S. Department of Energy under Contract No. DE-AC03-76SF00098.

References

International Tables for X-ray Crystallography (1974). Vol.IV; Table 2.2, pp 71-102. Birmingham: Kynoch Press.

Johnson, C. K. (1965). ORTEP. Report ORNL-3794. Oak Ridge National Laboratory, Tennessee.

Kinsley, S. A., Streitwieser Jr., A., & Zalkin, A. (1985). Organometallics 4, 52-57.

Table 1. Atomic Parameters

$$B_{eq} = \Sigma_i \Sigma_j B_{ij} a_i^* a_j^* a_i \cdot a_j / 3, \quad Å^2.$$

Atom	x	y	z	B_{eq}/B ($Å^2$)
Yb	0.04544(3)	0.18694(2)	0.24563(2)	3.45(1)
K(1)	0.34906(19)	0.19628(10)	0.44746(8)	4.27(5)
K(2)	-0.26406(16)	0.18968(10)	0.04465(8)	4.05(5)
O(1)	0.4529(5)	0.3275(3)	0.50844(29)	5.2(2)
O(2)	0.3451(6)	0.2295(3)	0.57997(28)	5.3(2)
O(3)	0.3212(7)	0.0963(4)	0.5509(3)	6.6(3)
O(4)	-0.3663(5)	0.3170(3)	-0.01679(28)	4.9(2)
O(5)	-0.2526(6)	0.2208(3)	-0.08799(27)	4.6(2)
O(6)	-0.2512(7)	0.0862(3)	-0.0605(3)	6.0(2)
C(1)	0.1471(9)	0.1051(5)	0.3523(4)	3.9(2)
C(2)	0.0682(9)	0.1533(6)	0.3786(4)	4.2(3)
C(3)	0.0602(10)	0.2214(6)	0.3804(5)	4.5(3)
C(4)	0.1246(11)	0.2731(6)	0.3546(5)	4.4(3)
C(5)	0.2251(10)	0.2748(5)	0.3177(4)	3.9(3)
C(6)	0.3045(8)	0.2284(5)	0.2949(4)	3.5(3)
C(7)	0.3165(8)	0.1602(5)	0.2945(4)	3.6(3)
C(8)	0.2532(8)	0.1067(4)	0.3175(4)	3.2(3)
C(9)	0.3093(9)	0.0382(4)	0.3015(4)	4.6(3)
C(10)	0.4548(10)	0.0321(5)	0.3429(6)	8.2(4)
C(11)	0.3052(11)	0.0317(5)	0.2245(5)	6.9(4)
C(12)	0.2329(12)	-0.0209(5)	0.3196(6)	7.4(4)
C(13)	-0.2241(8)	0.1565(5)	0.1990(4)	3.8(3)
C(14)	-0.2159(8)	0.2258(5)	0.1979(4)	3.9(3)
C(15)	-0.1388(10)	0.2717(5)	0.1732(5)	4.3(3)

C(16)	-0.0375(10)	0.2681(5)	0.1353(5)	4.2(3)
C(17)	0.0264(9)	0.2162(6)	0.1090(4)	4.0(3)
C(18)	0.0173(9)	0.1479(5)	0.1125(4)	3.7(3)
C(19)	-0.0568(9)	0.1014(5)	0.1401(4)	3.7(3)
C(20)	-0.1589(9)	0.1022(5)	0.1767(4)	3.6(3)
C(21)	-0.2120(9)	0.0356(4)	0.1947(4)	4.5(3)
C(22)	-0.3623(10)	0.0285(5)	0.1541(5)	6.7(4)
C(23)	-0.2045(10)	0.0297(5)	0.2712(5)	6.7(4)
C(24)	-0.1424(11)	-0.0239(5)	0.1726(6)	6.7(4)
C(25)	0.4333(10)	0.3749(5)	0.4539(5)	6.5(4)
C(26)	0.3666(9)	0.3408(5)	0.5541(5)	5.3(3)
C(27)	0.3941(9)	0.2908(5)	0.6097(5)	5.4(3)
C(28)	0.3351(11)	0.1813(6)	0.6293(5)	6.8(4)
C(29)	0.2546(14)	0.1262(6)	0.5956(6)	7.7(5)
C(30)	0.2563(16)	0.0378(7)	0.5240(6)	9.9(6)
C(31)	-0.3517(10)	0.3642(5)	0.0379(5)	6.4(4)
C(32)	-0.2846(9)	0.3319(4)	-0.0633(5)	5.2(3)
C(33)	-0.3034(9)	0.2815(5)	-0.1177(5)	5.2(3)
C(34)	-0.2393(10)	0.1725(5)	-0.1372(4)	5.5(3)
C(35)	-0.1686(10)	0.1152(5)	-0.1000(5)	5.9(3)
C(36)	-0.2009(4)	0.0265(6)	-0.0324(5)	8.5(5)
H(1)	0.126(6)	0.060(3)	0.368(3)	2.1(14)*
H(2)	0.014(8)	0.130(4)	0.406(4)	5.5(23)*
H(3)	-0.003(9)	0.242(4)	0.403(4)	5.8(26)*
H(4)	0.090(12)	0.313(6)	0.357(6)	10.3(43)*
H(5)	0.244(8)	0.320(4)	0.305(4)	5.2(23)*
H(6)	0.374(8)	0.248(4)	0.278(4)	4.0(20)*

H(7)	0.395(8)	0.149(4)	0.265(4)	6.4(22)*
H(8)	-0.301(7)	0.144(3)	0.214(3)	3.3(17)*
H(9)	-0.292(8)	0.252(4)	0.228(4)	6.3(22)*
H(10)	-0.159(8)	0.310(4)	0.180(4)	4.1(21)*
H(11)	-0.018(7)	0.315(4)	0.120(4)	4.9(19)*
H(12)	0.093(9)	0.231(4)	0.079(5)	6.9(25)*
H(13)	0.095(9)	0.127(4)	0.088(4)	6.5(24)*
H(14)	-0.027(8)	0.052(5)	0.136(4)	6.6(25)*

*Isotropically refined thermal parameters.

Table 2. Selected distances (Å) and angles (°).

Yb - C(1)	2.733(8)	Yb - C(19)	2.767(8)
Yb - C(2)	2.710(8)	Yb - C(20)	2.836(8)
Yb - C(3)	2.762(10)	Yb - Ring1	2.054
Yb - C(4)	2.786(10)	Yb - Ring2	2.056
Yb - C(5)	2.747(9)	K(1) - Ring1	2.456
Yb - C(6)	2.758(8)	K(2) - Ring2	2.468
Yb - C(7)	2.791(8)	K(1) - O(1)	3.056(6)
Yb - C(8)	2.821(7)	K(1) - O(2)	2.751(6)
Yb - C(13)	2.788(8)	K(1) - O(3)	2.981(6)
Yb - C(14)	2.758(8)	K(1) - O(4)$^{\underline{b}}$	2.865(6)
Yb - C(15)	2.735(8)	K(2) - O(1)$^{\underline{b}}$	2.857(6)
Yb - C(16)	2.746(8)))	K(2) - O(4)	22984(7)
Yb - C(17)	2.766(8)	K(2) - O(5)	2.762(6)
Yb - C(18)	2.737(8)	K(2) - O(6)	3.020(7)

O(1)	- K(1)	- O(2)	58.4(2)	Ring1	- K(1)	- O(1)	120.5
O(1)	- K(1)	- O(3)	114.4(2)	Ring1	- K(1)	- O(2)	136.9
O(1)	- K(1)	- O(4)[b]	75.0(2)	Ring 1	- K(1)	- O(3)	116.3
O(2)	- K(1)	- O(3)	58.4(2)	Ring1	- K(1)	- O(4)[b]	144.5
O(2)	- K(1)	- O(4)[b]	91.3(2)	Ring2	- K(2)	- O(4)	118.4
O(3)	- K(1)	- O(4)[b]	90.9(2)	Ring2	- K(2)	- O(5)	132.6
O(4)	- K(2)	- O(1)[b]	76.2(2)	Ring2	- K(2)	- O(6)	119.1
O(4)	- K(2)	- O(5)	59.2(2)	Ring2	- K(2)	- O(1)[b]	134.2
O(4)	- K(2)	- O(6)	113.6(2)	K(1)	- Ring1	- Yb	177.3
O(5)	- K(2)	- O(1)[b]	92.9(2)	K(2)	- Ring2	- Yb	176.9
O(5)	- K(2)	- O(6)	58.3(2)	Ring1	- Yb	- COT(2)	176.7
O(6)	- K(2)	- O(1)[b]	86.6(2)				

[a] Ring1 and Ring2 are [8]annulene rings C(1)-C(8) and C(13)-C(20) respectively.

[b] Atom at x, 1/2-y, 1/2+z

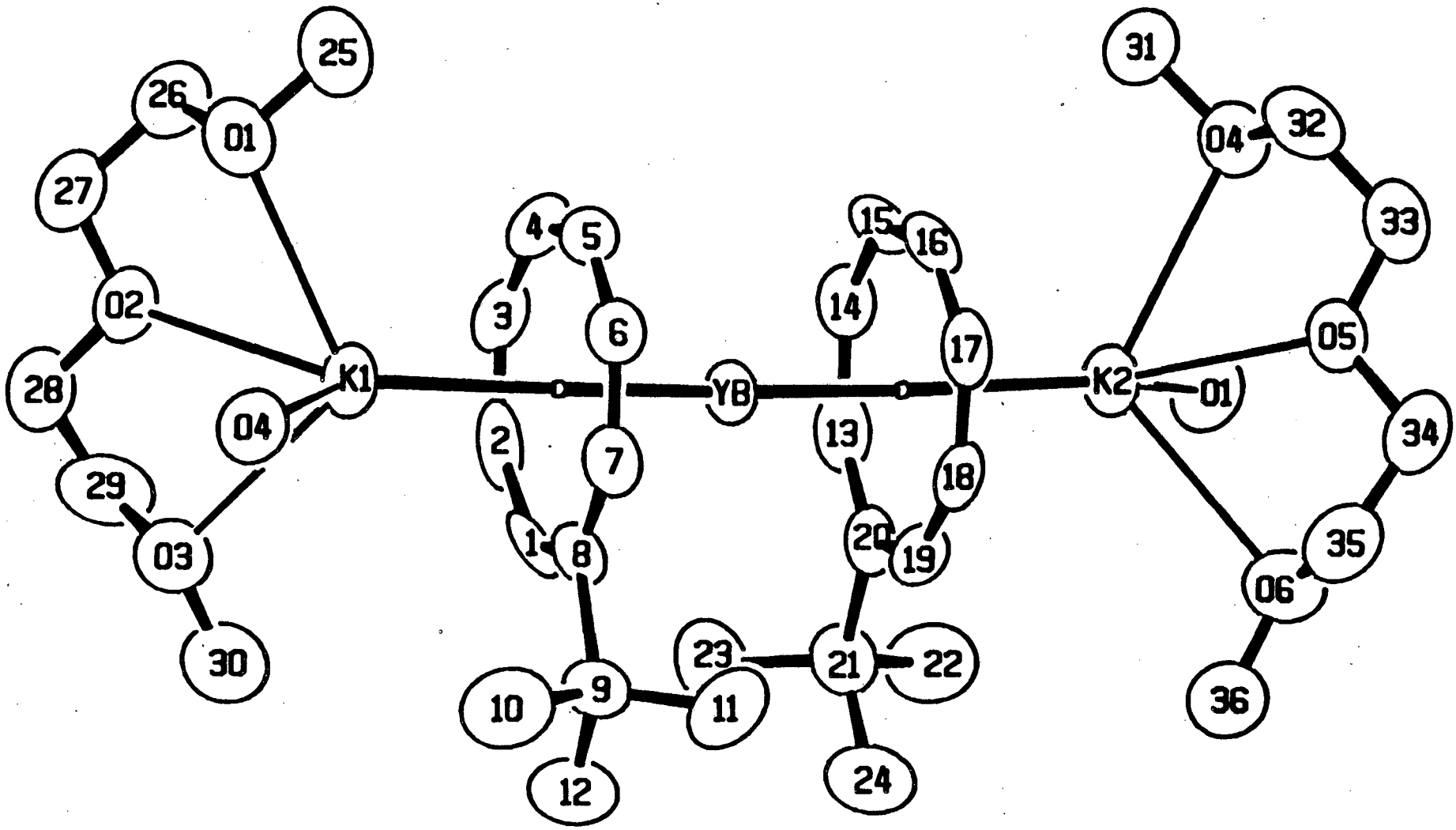

Fig.1. ORTEP (Johnson, 1965) of the molecule showing the atomic numbering scheme.

Supplemental Material for

Diglyme Adduct of Dipotassium Bis(t-butyl[8]annulene)ytterbate(II)

$$(CH_3OCH_2CH_2OCH_2CH_2OCH_3)_2K_2[CH_3)_3CC_8H_7]_2Yb$$

By Steven A. Kinsley, Andrew Streitwieser Jr. and Allan Zalkin

Molecular Research Division, Lawrence Berkeley Laboratory and

Department of Chemistry, University of California, Berkeley CA 94720

Abstract. M_r= 840.12, monoclinic, $P2_1/c$, a = 10.292(4), b = 20.588(6), c = 20.036(6) A, β = 103.28(4)°, V = 4131.9 A^3, Z = 4, D_x = 1.350 g cm^{-3}, λ(MoKα)=0.71073 A, μ = 16.5 cm^{-1}, F(000) = 1728, T = 300 K, R = 0.032 for 3212 unique reflections with $F^2>3\sigma(F^2)$. The ytterbium atom is sandwiched between two parallel [8]annulene rings with a mean Yb-C distance of 2.77(4) A. The potassium atoms cap the other sides of the rings at a mean K-C distance of 3.08(5) A; each potassium atom is also coordinated to four oxygen atoms from the diglyme ligands at distances that range from 2.86 to 3.06 A.

Table S1. Anisotropic Thermal Parameters (A^2)[a]

Atom	B_{11}	B_{22}	B_{33}	B_{12}	B_{13}	B_{23}
YB	3.297(16)	3.817(17)	2.788(15)	.143(21)	-.239(10)	.090(19)
K(1)	4.17(8)	5.30(11)	3.05(7)	.50(8)	.22(6)	-.27(8)
K(2)	3.89(8)	4.79(9)	3.20(7)	-.14(9)	.24(6)	.06(8)
O(1)	4.64(28)	5.8(4)	4.90(29)	.63(27)	.93(24)	.73(27)
O(2)	7.4(4)	5.3(3)	3.48(28)	-.1(3)	1.75(26)	-.38(27)
O(3)	8.9(5)	5.4(4)	5.5(4)	1.9(3)	1.6(3)	.1(3)
O(4)	4.43(26)	5.2(3)	4.77(27)	-.25(29)	.76(22)	.4(3)
O(5)	5.7(3)	4.9(3)	3.31(26)	-.18(27)	.90(23)	.40(25)
O(6)	7.3(4)	4.9(4)	6.2(4)	.6(3)	2.5(3)	.4(3)
C(1)	4.2(5)	3.8(5)	2.9(4)	-.1(4)	-.7(4)	2.3(4)
C(2)	3.2(4)	7.7(7)	1.8(4)	.3(5)	.6(3)	.9(4)
C(3)	4.5(5)	5.3(7)	3.2(5)	.9(5)	-.0(4)	-1.3(5)
C(4)	4.6(5)	4.2(6)	3.9(5)	.4(5)	-.2(4)	-1.6(4)
C(5)	4.4(5)	3.0(5)	3.6(5)	-.2(4)	-.6(4)	-.0(4)
C(6)	2.5(4)	3.9(5)	3.7(4)	-.8(4)	-.5(3)	.1(4)
C(7)	2.2(4)	4.8(5)	3.4(4)	.2(3)	.1(3)	.3(3)
C(8)	2.4(4)	3.6(5)	3.1(4)	.8(3)	-.5(3)	.7(3)
C(9)	4.9(4)	3.5(4)	4.7(5)	1.6(4)	-.1(4)	.1(4)
C(10)	5.7(5)	7.0(6)	9.7(7)	3.7(5)	-2.7(5)	-1.7(6)
C(11)	8.2(6)	6.7(6)	5.9(6)	1.5(5)	1.6(5)	-2.3(5)
C(12)	9.7(8)	4.1(6)	8.0(7)	.8(5)	.9(6)	.2(5)
C(13)	1.9(4)	6.0(6)	3.2(4)	-1.1(4)	.0(3)	.3(4)
C(14)	2.6(4)	5.3(6)	3.4(4)	.7(4)	-.2(3)	-.0(4)
C(15)	4.0(5)	3.5(6)	4.4(5)	2.5(5)	-1.4(4)	.9(4)
C(16)	5.0(5)	3.4(5)	3.5(4)	.1(4)	-.5(4)	1.5(4)
C(17)	3.9(4)	5.8(6)	2.2(4)	-.5(4)	.7(3)	.4(4)
C(18)	4.5(5)	4.4(5)	2.1(4)	-.6(4)	.7(3)	-.7(4)
C(19)	4.0(5)	3.4(5)	3.4(4)	-.9(4)	.1(4)	-.6(4)
C(20)	3.4(4)	4.3(5)	2.5(4)	-1.1(4)	-.1(3)	.3(3)
C(21)	4.3(4)	4.3(5)	4.5(5)	-1.6(4)	.4(4)	.6(4)
C(22)	6.1(6)	5.5(6)	8.4(7)	-1.8(5)	1.4(5)	-.1(5)
C(23)	7.6(6)	6.9(6)	5.4(5)	-2.3(5)	.8(4)	1.7(5)
C(24)	7.3(6)	4.2(6)	8.1(7)	-.3(5)	1.0(5)	.7(5)
C(25)	6.0(5)	7.3(6)	5.5(5)	-.8(5)	.0(4)	1.0(5)
C(26)	5.2(5)	5.6(6)	5.4(5)	.0(4)	1.9(4)	-1.0(4)
C(27)	5.7(5)	6.2(6)	4.4(5)	-.2(4)	1.2(4)	-1.2(4)
C(28)	9.9(7)	6.7(6)	3.9(4)	.9(6)	1.8(4)	-.2(5)
C(29)	12.0(9)	4.9(6)	7.9(7)	2.0(6)	5.7(7)	1.1(5)
C(30)	16.1(12)	6.0(7)	7.0(7)	.7(7)	1.5(7)	.7(6)
C(31)	7.1(6)	5.7(6)	5.6(5)	1.0(5)	-.1(5)	-1.0(5)
C(32)	4.8(4)	4.6(6)	6.2(5)	-.1(4)	1.3(4)	1.7(4)
C(33)	5.1(5)	6.5(6)	4.1(5)	.1(4)	1.0(4)	.8(4)
C(34)	6.4(5)	6.3(7)	4.0(4)	-1.1(5)	1.5(4)	-.9(4)
C(35)	6.3(6)	5.9(6)	5.7(5)	-.0(5)	2.0(5)	-1.3(5)
C(36)	14.2(10)	5.7(7)	5.6(6)	1.6(6)	2.4(6)	-.2(5)

[a] The anisotropic temperature factor has the form:

$$\exp[-0.25(B_{11}h^2a^{*2} + 2B_{12}hka^*b^* + \cdots].$$

Table S2. Estimated Hydrogen Positional and Isotropic Thermal Parameters (A^2)[a]

Atom	x	y	z	B
H(15)	.2734	.3383	.5291	10.000
H(16)	.3857	.3841	.5742	10.000
H(17)	.4902	.2878	.6293	10.000
H(18)	.348	.3025	.6457	10.000
H(19)	.2918	.200	.6637	10.000
H(20)	.4244	.166	.6517	10.000
H(21)	.2423	.0949	.6305	10.000
H(22)	.1679	.1419	.5701	10.000
H(23)	-.1907	.3329	-.0384	10.000
H(24)	-.3099	.3744	-.0841	10.000
H(25)	-.3985	.277	-.139	10.000
H(26)	-.2550	.2941	-.1524	10.000
H(27)	-.1873	.1902	-.1683	10.000
H(28)	-.3277	.1595	-.1635	10.000
H(29)	-.1497	.0836	-.1331	10.000
H(30)	-.0843	.1291	-.0696	10.000
H(31)	.4573	.0353	.3917	12.000
H(32)	.5085	.0669	.3294	12.000
H(33)	.4907	-.0101	.333	12.000
H(34)	.3599	.0660	.2108	12.000
H(35)	.2129	.0359	.1982	12.000
H(36)	.3404	-.0109	.2158	12.000
H(37)	.140	-.0187	.2936	12.000
H(38)	.236	-.0204	.3687	12.000
H(39)	.2745	-.0607	.3077	12.000
H(40)	-.3670	.0313	.1047	12.000
H(41)	-.4153	.0636	.1675	12.000
H(42)	-.3972	-.0135	.1647	12.000
H(43)	-.2590	.0638	.2853	12.000
H(44)	-.1116	.0344	.2966	12.000
H(45)	-.2384	-.0130	.2809	12.000
H(46)	-.0468	-.0226	.1950	12.000
H(47)	-.1528	-.0232	.1227	12.000
H(48)	-.1818	-.0637	.1859	12.000
H(49)	.4535	.4183	.4738	12.000
H(50)	.3402	.3735	.428	12.000
H(51)	.4926	.3651	.4235	12.000
H(52)	.1655	.0474	.4992	12.000
H(53)	.2554	.0078	.5619	12.000
H(54)	.3062	.0181	.4929	12.000
H(55)	-.3772	.4071	.018	12.000
H(56)	-.2584	.365	.0635	12.000
H(57)	-.4093	.3521	.0684	12.000
H(58)	-.1121	.033	-.0025	12.000
H(59)	-.1943	-.0035	-.0695	12.000
H(60)	-.2609	.0084	-.0058	12.000

[a] The isotropic temperature factor has the form $\exp[-B(\sin\theta/\lambda)^2]$.

Table S3. Least-Squares Planes and Deviations (Å) Therefrom

Plane 1, C(1) - C(8)		Plane2, C(13) - C(20)	
5.06 x + 0.63 y + 14.7 z = 6.02		5.24 x - 0.25 y + 14.44 z = 1.68	
atom	dist	atom	dist
C(1)	-0.022	C(13)	-0.022
C(2)	-0.004	C(14)	-0.011
C(3)	0.025	C(15)	0.024
C(4)	0.003	C(16)	0.009
C(5)	-0.030	C(17)	-0.024
C(6)	0.007	C(18)	-0.005
C(7)	0.018	C(19)	0.018
C(8)	0.003	C(20)	0.011
C(9)	0.008	C(21)	0.010
Yb	-2.054	Yb	2.056
K	2.456	K	-2.468
H(1)	0.065	H(8)	-0.199
H(2)	0.119	H(9)	0.012
H(3)	0.058	H(10)	0.006
H(4)	-0.117	H(11)	-0.120
H(5)	-0.099	H(12)	-0.108
H(6)	0.124	H(13)	0.050
H(7)	-0.028	H(14)	0.118

Table S4. Additional Distances

Atoms	Dist (A)	Atoms	Dist (A)
C(1) - C(2)	1.455(13)	C(13) - C(14)	1.429(12)
C(2) - C(3)	1.404(12)	C(14) - C(15)	1.396(13)
C(3) - C(4)	1.413(15)	C(15) - C(16)	1.426(14)
C(4) - C(5)	1.403(14)	C(16) - C(17)	1.418(13)
C(5) - C(6)	1.400(12)	C(17) - C(18)	1.412(11))
C(6) - C(7)	1.410(112	C(18) - C(19)	1.415(11)
C(7) - C(8)	1.409(11)	C(19) - C(20)	1.412(12)
C(8) - C(1)	1.425(12)	C(20) - C(13)	1.427(12)
C(8) - C(9)	1.584(11)	C(20) - C(21)	1.549(11)
C(9) - C(10)	1.542(12)	C(21) - C(22)	1.581(12)
C(9) - C(11)	1.538(12)	C(21) - C(23)	1.522(12)
C(9) - C(12)	1.538(13)	C(21) - C(24)	1.536(13)
C(26) - C(27)	1.495(13)	C(32) - C(33)	1.485(13)
C(28) - C(29)	1.474(15)	C(34) - C(35)	1.493(13)
O(1) - C(25)	1.444(10)	O(4) - C(31)	1.445(10)
O(1) - C(26)	1.441(10)	O(4) - C(32)	1.424(11)
O(2) - C(27)	1.437(10)	O(5) - C(33)	1.431(11)
O(2) - C(28)	1.420(12)	O(5) - C(34)	1.429(10)
O(3) - C(29)	1.388(11)	O(6) - C(35)	1.419(11)
O(3) - C(30)	1.422(14)	O(6) - C(36)	1.400(12)
K(1) - C(1)	3.107(9)	K(2) - C(13)	3.101(9)
K(1) - C(2)	3.034(9)	K(2) - C(14)	3.087(9)
K(1) - C(3)	3.012(10)	K(2) - C(15)	3.102(10)
K(1) - C(4)	3.054(11)	K(2) - C(16)	3.066(9)
K(1) - C(5)	3.077(9)	K(2) - C(17)	3.021(9)
K(1) - C(6)	3.057(9)	K(2) - C(18)	3.027(9)
K(1) - C(7)	3.096(9)	K(2) - C(19)	3.105(9)
K(1) - C(8)	3.158(8)	K(2) - C(20)	3.178(8)

Table S5. Additional Angles

Atoms	Angle(°)	Atoms	Angle(°)
C(8) - C(1) - C(2)	135.7(9)	C(20) - C(13) - C(14)	138.0(10)
C(1) - C(2) - C(3)	136.9(11)	C(13) - C(14) - C(15)	136.2(10)
C(2) - C(3) - C(4)	135.0(12)	C(14) - C(15) - C(16)	134.3(10)
C(3) - C(4) - C(5)	132.5(11)	C(15) - C(16) - C(17)	134.1(10)
C(4) - C(5) - C(6)	135.4(10)	C(16) - C(17) - C(18)	133.6(10)
C(5) - C(6) - C(7)	137.7(10)	C(17) - C(18) - C(19)	137.9(10)
C(6) - C(7) - C(8)	136.8(10)	C(18) - C(19) - C(20)	136.7(9)
C(7) - C(8) - C(1)	129.9(9)	C(19) - C(20) - C(13)	129.1(9)
C(1) - C(8) - C(9)	115.8(8)	C(19) - C(20) - C(21)	117.1(9)
C(7) - C(8) - C(9)	114.3(8)	C(13) - C(20) - C(21)	113.8(8)
C(8) - C(9) - C(10)	108.5(8)	C(20) - C(21) - C(22)	108.5(8)
C(8) - C(9) - C(11)	110.7(7)	C(20) - C(21) - C(23)	111.6(8)
C(8) - C(9) - C(12)	115.3(8)	C(20) - C(21) - C(24)	115.2(8)
C(25) - O(1) - C(26)	110.7(7)	C(31) - O(4) - C(32)	112.2(8)
O(1) - C(26) - C(27)	107.7(8)	O(4) - C(32) - C(33)	109.5(8)
C(26) - C(27) - O(2)	108.0(8)	C(32) - C(33) - O(5)	109.4(8)
C(27) - O(2) - C(28)	113.6(8)	C(33) - O(5) - C(34)	113.9(7)
O(2) - C(28) - C(29)	110.0(8)	O(5) - C(34) - C(35)	108.5(8)
C(28) - C(29) - O(3)	109.1(11)	C(34) - C(35) - O(6)	109.0(9)
C(29) - O(3) - C(30)	111.2(10)	C(35) - O(6) - C(36)	112.3(9)

This report was done with support from the Department of Energy. Any conclusions or opinions expressed in this report represent solely those of the author(s) and not necessarily those of The Regents of the University of California, the Lawrence Berkeley Laboratory or the Department of Energy.

Reference to a company or product name does not imply approval or recommendation of the product by the University of California or the U.S. Department of Energy to the exclusion of others that may be suitable.

LAWRENCE BERKELEY LABORATORY
TECHNICAL INFORMATION DEPARTMENT
UNIVERSITY OF CALIFORNIA
BERKELEY, CALIFORNIA 94720