UC 37
LBL-20490 c.1

Lawrence Berkeley Laboratory
UNIVERSITY OF CALIFORNIA

Physics Division

RECEIVED
LAWRENCE
BERKELEY LABORATORY

DEC 4 1985

LIBRARY AND
DOCUMENTS SECTION

For Reference
Not to be taken from this room

Presented at the 1985 IEEE Nuclear Science Symposium, San Francisco, CA, October 21-25, 1985; and to be published in IEEE Transactions on Nuclear Science, NS-33 (February 1986)

FIRST EXPERIMENTAL TESTS OF A LEAD GLASS DRIFT CALORIMETER

A. Del Guerra, R. Bellazzini, M. Conti, M.M. Massai, G. Schwartz, R. Habel, T. Mulera, and V. Perez-Mendez

October 1985

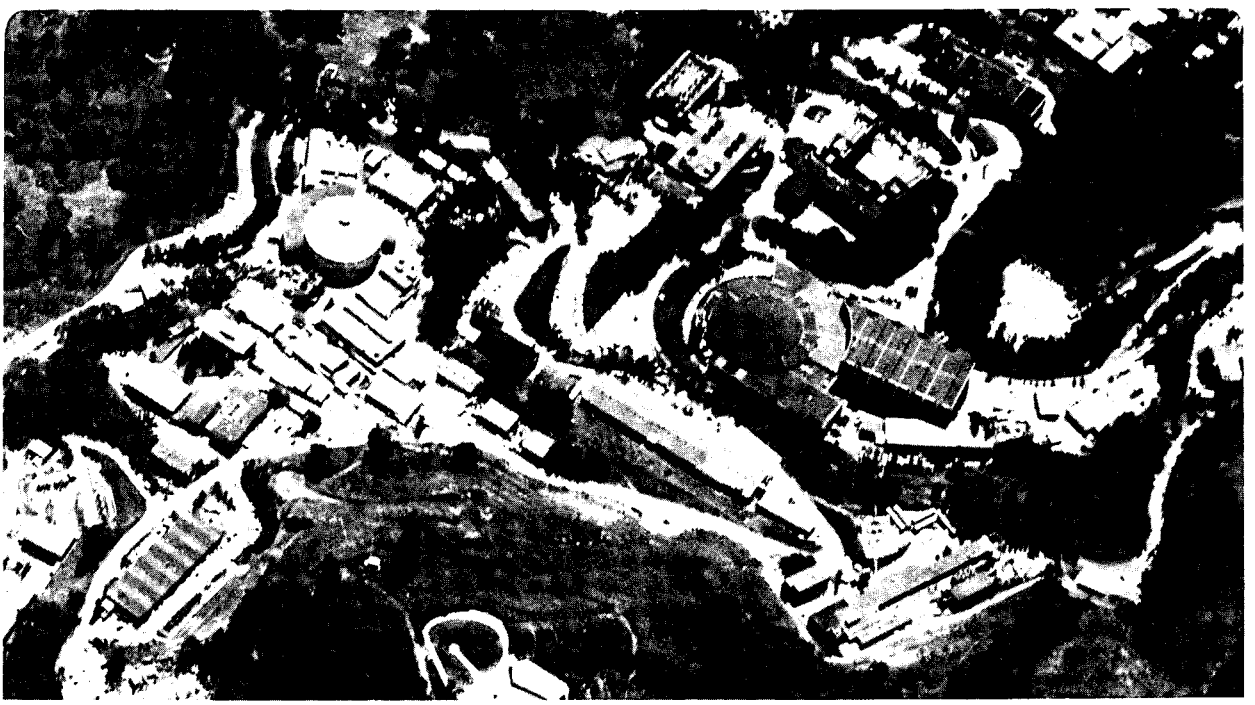

LBL-20490 c.1

Prepared for the U.S. Department of Energy under Contract DE-AC03-76SF00098

DISCLAIMER

This document was prepared as an account of work sponsored by the United States Government. While this document is believed to contain correct information, neither the United States Government nor any agency thereof, nor the Regents of the University of California, nor any of their employees, makes any warranty, express or implied, or assumes any legal responsibility for the accuracy, completeness, or usefulness of any information, apparatus, product, or process disclosed, or represents that its use would not infringe privately owned rights. Reference herein to any specific commercial product, process, or service by its trade name, trademark, manufacturer, or otherwise, does not necessarily constitute or imply its endorsement, recommendation, or favoring by the United States Government or any agency thereof, or the Regents of the University of California. The views and opinions of authors expressed herein do not necessarily state or reflect those of the United States Government or any agency thereof or the Regents of the University of California.

LBL-20490

FIRST EXPERIMENTAL TESTS OF A LEAD GLASS DRIFT CALORIMETER

A. Del Guerra, R. Bellazzini, M. Conti, M.M.Massai, G. Schwartz,
R. Habel, T. Mulera, and V. Perez-Mendez

Lawrence Berkeley Laboratory
University of California
Berkeley, California 94720

October 1985

This work was supported by the U.S. Department of Energy under Contract Number DE-AC03-76SF00098.

FIRST EXPERIMENTAL TESTS OF A LEAD GLASS DRIFT CALORIMETER

A.Del Guerra, R.Bellazzini, M.Conti, M.M.Massai, G.Schwartz
University of Pisa, Physics Department, Piazza Torricelli 2, I-56100 Pisa (Italy)
INFN, Sezione di Pisa, Via Livornese, I-56010 S.Piero a Grado (PI)

R. Habel
ENEA, TIB-FIS-TECNLAS Frascati, I-00044 Frascati (Roma)

T.Mulera, V.Perez-Mendez
University of California, Lawrence Berkeley Laboratory, Berkeley, CA 94720, USA

Abstract

We are building a drift collection calorimeter, which has a combined radiator and electric field shaping structure made of fused lead glass tubing, treated in a H_2 reducing atmosphere. We describe the construction detail of the calorimeter and the experimental measurements on several prototypes with radioactive sources and minimum ionizing particles.

Introduction

Drift Collection Calorimeters or High Density Projection Chambers have been proposed[1,2] as a method of achieving fine granularity in gas sampling calorimeters, while minimizing the number of readout channels. The construction scheme for these devices usually consists of plates of high Z material alternating with gas sampling regions with various drift field shaping arrangements.

We have proposed[3] a drift collection calorimeter which has a combined radiator and electric field shaping structure made of fused lead glass tubing. Reduction of a surface layer of lead oxide in a hydrogen oven is used to form a high resistance metallic layer on the interior of the tubes. This layer is used as a continuous voltage divider for drift field shaping. Tubes of high density lead glass are fused together with their axes perpendicular to the direction of the incident radiation as shown in fig. 1. The use of the tubes rather than planar sampling gas gives a marked improvement in the energy resolution of the devices [4]. This is a result of the tubes' limiting of track length variations in the direction transverse to the shower axis. This reduces the fluctuations due to the wide angular distribution of the soft shower electrons in the sampling gas.

In this paper we describe the project of the calorimeter and its construction details. We also report on the first experimental measurements on several prototypes with radioactive sources and minimum ionizing particles.

The Calorimeter Design

The calorimeter (CALTUB project) will consist of tubes of 40 cm drift length with a total length of $\sim 20\ X_0$, which fully contains [4] the electromagnetic shower of incident particles of energy up to 10 GeV (see fig. 2). The tubes of 5 mm inner diameters and 1 mm wall thickness were drawn [5] from Schott-RS-520 glass slugs (71% PbO, density 5.18g/cm^3, X_0 = 1.66 cm). Higher density glass (Hi-D 79% PbO, density 6.2g/cm^3, X_0 = 1.28 cm), as previously used for lead glass capillaries matrices in Positron Emission Tomography applications[5], could not be drawn to tubes of these dimensions. The choice of 5 and 7 mm for the I.D and the O.D, respectively, was a compromize between a small sampling size ($\sim 1/6\ X_0$) and a reasonable total length of the calorimeter (75 cm for 20 X_0). The main characteristics of the CALTUB calorimeter are listed in table 1.

TABLE 1

Physical characteristics of the calorimeter

Glass used	Schott RS-520
PbO composition(by weight)	71%
Density	5.18 g/cm^3
Radiation length	1.66 cm
Tubing diameter (ID/OD)	5/7 mm
Drift length	40 cm
Longitudinal dimension (in radiation lengths)	$\sim 20\ X_0$
Actual longitudinal dimension	75 cm
Transverse dimension	30 cm
Total weight	$\sim$ 200 kg

We have made an extensive Monte Carlo study of the expected performance of the CALTUB calorimeter using the EGS4 shower code [4]. The total energy deposited in all gas regions is plotted on an event-by-event basis in fig. 3 for 200 incident electrons of energy of 1 GeV. The fractional energy resolution (σ/E) is obtained directly from the Monte Carlo data using the conventional formulas for the mean value and standard deviation. It has been shown in a previous paper [4] that the dependence of σ/E in this type of calorimeter agrees with the standard $E^{-1/2}$ model. The dependence of σ/E on the gas pressure for the CALTUB calorimeter is shown in fig. 4. The errors on these points were obtained by dividing the EGS runs at 1 GeV incident electron energy into six runs of 200 incident showers. Each data point and error bar corresponds to the mean and standard deviation of the mean for six runs. The Monte Carlo calculated energy resolution goes from $(16.8 \pm 0.6)\% / \sqrt{E}$ at atmospheric pressure to $(11.7 \pm 0.3)\%/\sqrt{E}$ at 10 atm, with the MWPC working in the proportional mode

Construction of the Lead-Glass Arrays

There are essentially six phases to the construction of a lead glass matrix, which have described in detail in reference 7:

i) Cutting of the tubes and their stacking in a mold. The tubes of inner diameter 5 mm were cut to size individually on a lathe and then were placed in a mold. The mold was made of graphite to avoid attachment and to match the expansion coefficient of the glass.

ii) Fusing of the glass. The temperature of the oven was slowly raised (over a period of 36 hrs) until the softening point of the glass was reached. A space was left between the mold and its lid to allow for compression of the tubes. A closed lid indicates that the glass has sagged. To avoid a visual inspection of the mold, an electrical sensor has been developed that announces the closure of the lid (see fig. 5), i.e. the end of the fusing process. An annealing and a cooling processes are then performed.

iii) Slicing of the fused glass. The arrays were cut to size with a diamond saw (400 mm diameter, 2 mm thick with a very fine grit) rotating ay high speed (∿ 3000 r/min); no polishing of the glass was made.

iv) Cleaning of the glass and HCl treatment. First, the matrix was ultrasonic cleaned with deionized water, acetone and again deionized water. Then it was soaked for few minutes in a 0.1 molar HCl solution to produce a protective SiO_2 layer on the surface. This silica layer was than hardened by putting the glass for 8 hrs inside an oven at 140°C.

v) The H_2 reduction treatment. The glass to be trated was placed at the bottom of the oven, which was sealed and evacuated. The temperature of the oven was slowly raised until the desired temperature was reaches. The H_2 was then allowed to flow at low rate for a period of some hours.

Vi) Production of the conductive layer at the ends of the tubes. A conductive layer was produced by applying silver epoxy with a rubber roller, following a method not unlike that of a printing press. Very thin layer of silver epoxy was transferred to the surface of the glass, to produce a resistance across the surface of 50-200 Ω.

We have investigated the resistivity of the glass versus the temperature of the H_2 treatment (fig. 6) and versus the duration of the H_2 treatment at a fixed temperature (fig. 7). As a result, we decided to treat the glass in H_2 at 360° for 6 hours which gives a glass resistivity of $\sim 10^{11}$ Ω/□ , which is high enough not to create heating problems and is still adequate for field shaping, with a measured uniformity of ± 10% along the inner surface of the tube.

Experimental Measurements

Experimental tests were made with several 5x5 cm^2 arrays of drift length of 4.5, 8.5 and 14.5 cm. The lead glass array prototype was put inside a box with P_{30} gas (Ar - CH_4 in the proportion 70% - 30%), see fig. 8. An electric field (E_2) was created inside the array by applying a negative voltage $-V_{CAL}$ at one extremity of the array. At the other extremity a standard MWPC chamber was positioned with the cathode plane at a positive voltage (+ V_C) to establish the proper electric field (E_1) between the ends of the tubes and the chamber. An additional grid powered at $-V_G < -V_{CAL}$ ensured a drifting electric field E_3 on the other side of the array. Precautions were taken in order to always have $E_3 < E_2 < E_1$, but no attempt was made to optimize the electric field ratios in order to have maximum transmission [8].

Test with radioactive sources. Figure 9 shows the rate of the MWPC as a function of the voltage V_{CAL} applied to a 8.5 cm prototype, with a ^{55}Fe source set at position B (see fig. 8) and shining through a mylar window. An other mylar window at A allows to check the MWPC efficiency and plateau. The gas pressure was 1.5 atm and V_A and V_C were 4.8 kV and 2.0 kV, respectively. Figure 9 clearly demonstrates that for a reduced electric field (E_2/p) greater than 0.2 kV cm^{-1} atm^{-1} the transmission efficiency has reached its maximum; E_3 was kept constant as a function of V_{CAL}. The MWPC backgroung has been subtracted, and this produces a null count rate at $V_{CAL} = 0$. Similar plots were obtained at several pressures ranging from 1 to 2 atm.

Test with minimum ionizing particles. Additional transmission tests were succesfully made with cosmic rays and at CERN. Figure 10 shows the set-up utilized at the PS test beam at CERN: three scintillator (PM1 - PM4 and PM5) defined a beam spot of 1-1.5 cm along the calorimeter axis; their coincidences formed the trigger. The box, previously described (see fig.8), containing the lead-glass array and the chamber, was moved horizontally across the beam, so that different regions of the array were defined by the trigger spot. The trigger was used as the START of a TDC (qVt - Lecroy model 3001) and the signal of the MWPC as the STOP. Figure 11a) shows a typical time spectrum (FWHM ≲ 200 ns) obtained at 1.5 atm (P_{30} gas) at E_2/p of 0.31 kV cm^{-1} atm^{-1}. Figure 11b) shows an autocalibration curve, in which two time spectra from position A and B (see fig. 10) are superimposed. The time difference between the two peaks is ∿ 480 ns. Given the distance between A and B of 3 cm, we obtain a drift velocity for the electrons in P_{30} of 63 μm/ns at that value of E_2/p , which is compatible with the measurements of Jean-Marie et al.[9].

Conclusions

The CALTUB calorimeter will be made by assembling several modules (see fig. 2), many of which (10x14x40 cm^3) have already been constructed. Additional tests on these modules including measurements of attenuation length for electron drift will be made soon at CERN.

Acknowledgments

We thank M. Cinti, M. Di Fino, and L. Righini (ENEA-Frascati) for the assistance in making the calorimeter prototypes and E. Carboni (INFN-Pisa) for drawing the figures.

References

(1) L.E. Price, Physica Scripta, 23 (1980) 685.

(2) H.G. Fischer and O. Ullaland, IEEE Trans.Nucl.Sci., NS-27(1980) 38; E. Albrecht et al., IEEE Trans.Nucl. Sci., NS-30 (1983) 142; A. Cattai et al., IEEE Trans. Nucl. Sci. NS-32 (1985) 705.

(3) T. Mulera, V. Perez-Mendez, H. Hirayama, W.R.Nelson, R. Bellazzini, A. Del Guerra and M.M.Massai, IEEE Trans. Nucl. Sci., NS-31 (1984) 64.

(4) H.Hirayama, W.R. Nelson, A. Del Guerra, T. Mulera, and V. Perez-Mendez, Nucl.Instr. and Meth., 220 (1984) 327.

(5) The drawing of the tubes was made by Garner Glass Co., 177 South Indian Hill Rd, Claremont, Ca 97111, USA.

(6) G.K. Lum, M.I. Green, V. Perez-Mendez, and K.C.Tam, IEEE Trans. Nucl. Sci., NS-27 (1980) 157.

(7) G. Schwartz, M. Cinti, M. Conti, A. Del Guerra, M. Di Fino, R. Habel, V. Perez-Mendez, L. Righini, INFN/TC-85/6 (1985).

(8) O. Bunemann, T.E. Cranshaw, J.A. Harvey, Can. J. Research, 27A (1949) 191.

(9) B. Jean-Marie, V. Lepeltier, and D. L'Hote, Nucl. Instr. and Meth., 159 (1978) 551.

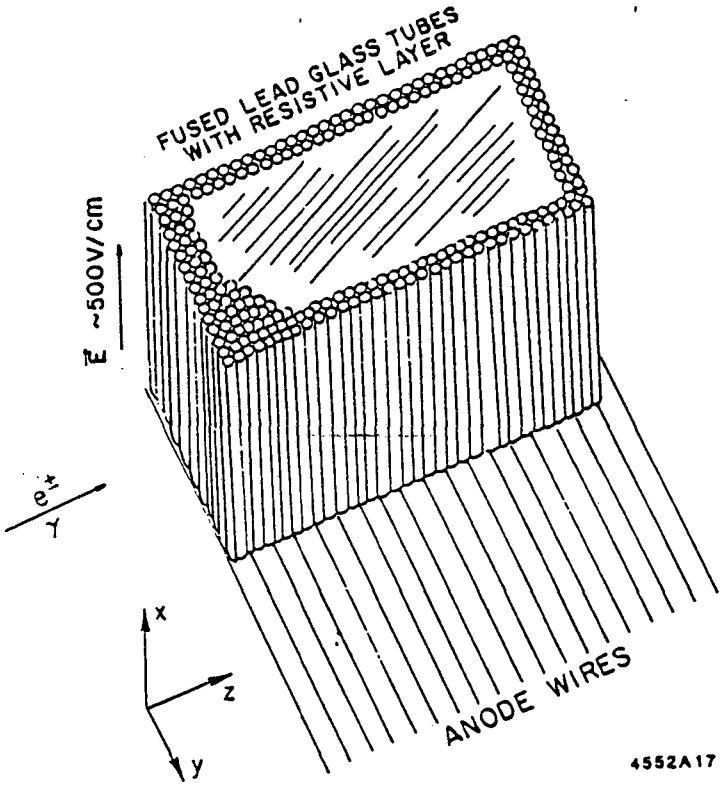

Fig. 1 - Schematic drawing of the drift collection calorimeter with lead glass tubes and wire chamber readout.

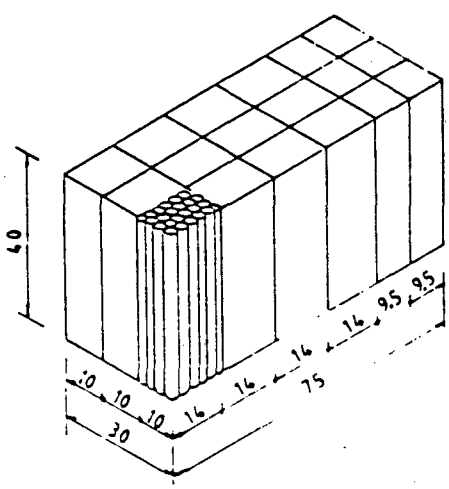

Fig. 2 - Schematic drawing of the 20 X_0 CALTUB calorimeter, showing the modules dimensions (in cm).

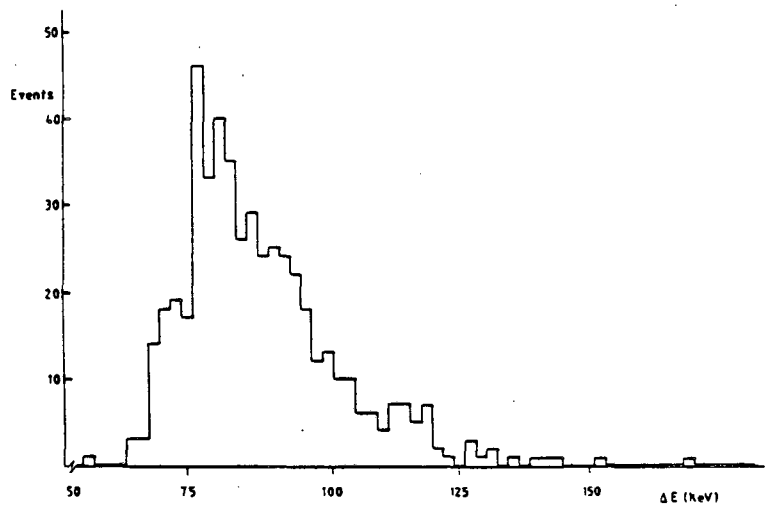

Fig. 3 - Monte Carlo distribution of energy deposition in gas region for 1 GeV incident electron for the CALTUB calorimeter.

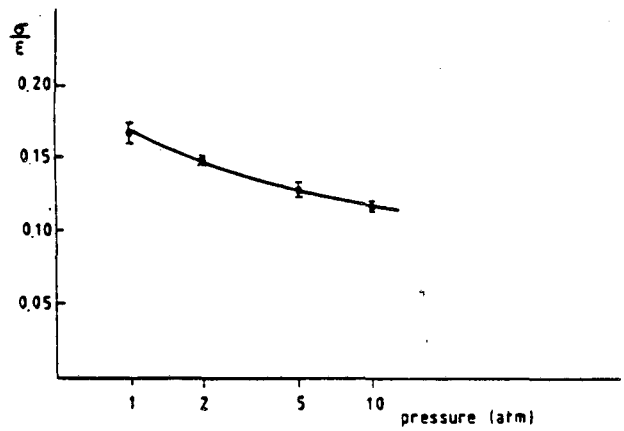

Fig. 4 - Fractional energy resolution for the CALTUB calorimeter, as a function of pressure. (The solid line is drawn to guide the eye through the data).

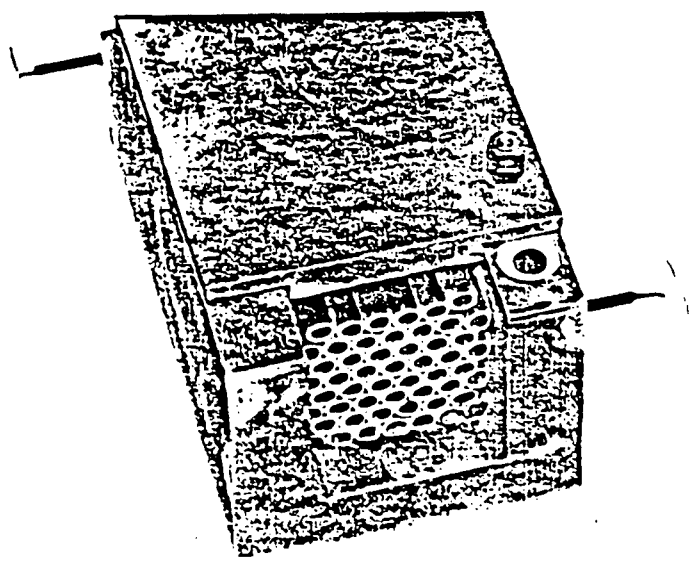

Fig. 5 - Graphite mold with its sensors: a 5x5 cm^2 prototype is inside the mold.

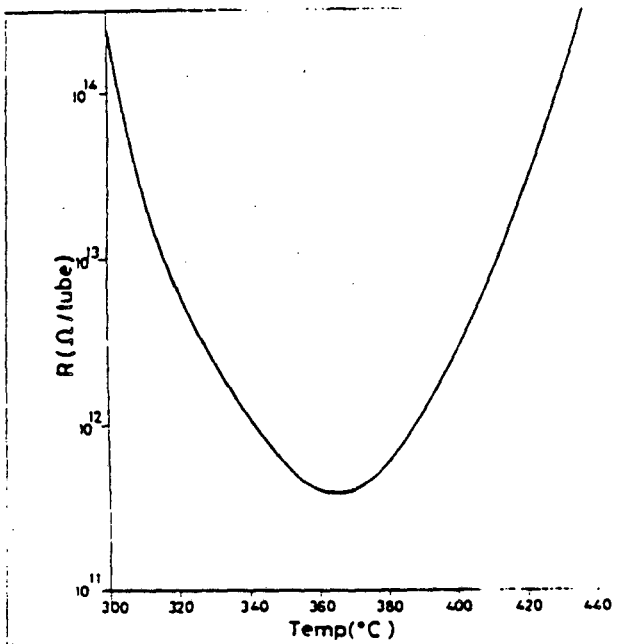

Fig. 6 - Resistance of a 10 cm (5 mm ID) tube vs temperature of the H_2 treatment.

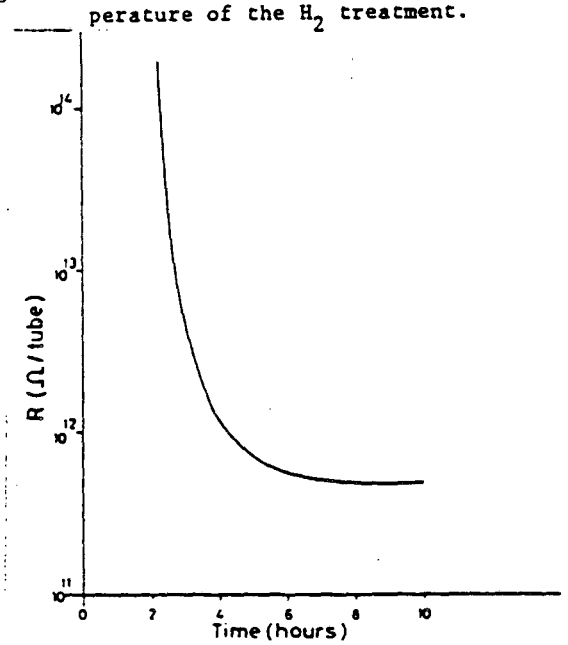

Fig. 7 - Resistance of a 10 cm (5 mm ID) tube vs time of the H_2 treatment.

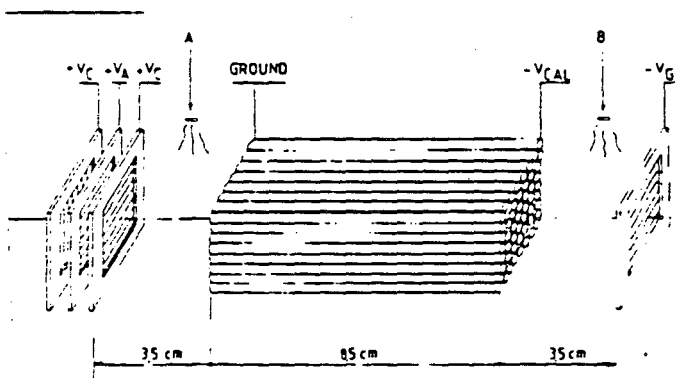

Fig. 8 - Arrangement for the experimental tests.

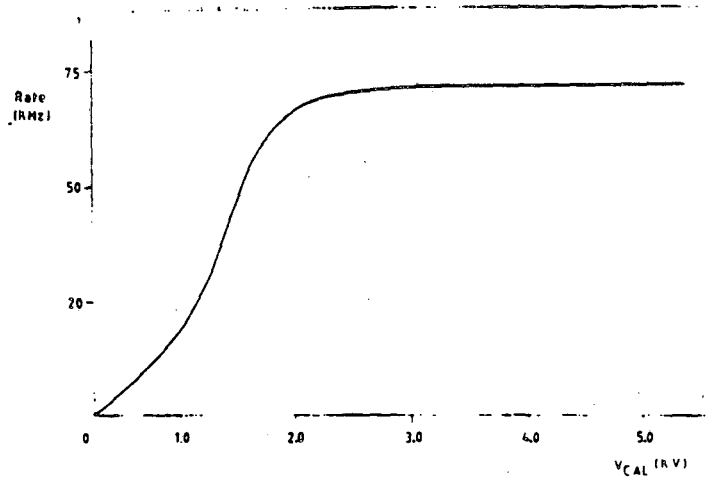

Fig. 9 - MWPC count rate as a function of V_{CAL}, with an external ^{55}Fe source

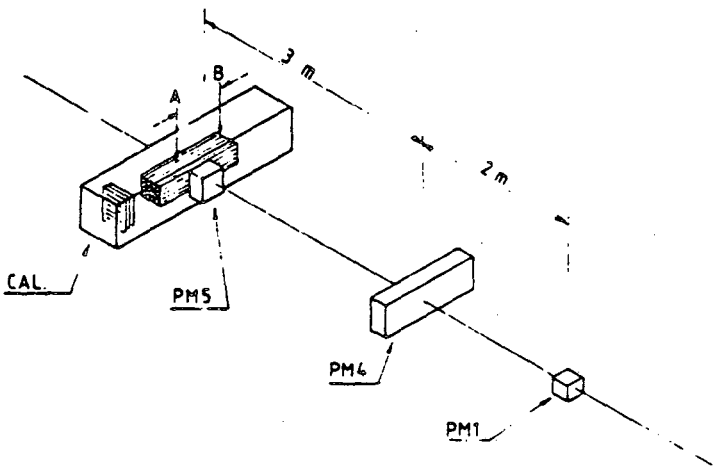

Fig. 10 - Experimental lay-out at the CERN Test Beam

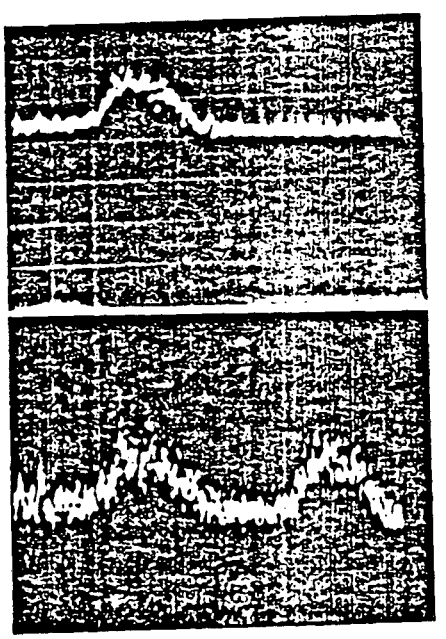

Fig. 11 - Time spectra obtained with m. i.p.: a) beam spot of 1-1.5 cm; b) two superimposed spectra 3 cm apart along the calorimeter axis.

This report was done with support from the Department of Energy. Any conclusions or opinions expressed in this report represent solely those of the author(s) and not necessarily those of The Regents of the University of California, the Lawrence Berkeley Laboratory or the Department of Energy.

Reference to a company or product name does not imply approval or recommendation of the product by the University of California or the U.S. Department of Energy to the exclusion of others that may be suitable.

LAWRENCE BERKELEY LABORATORY
TECHNICAL INFORMATION DEPARTMENT
UNIVERSITY OF CALIFORNIA
BERKELEY, CALIFORNIA 94720