UC-28
LBL-20502
c.1

Lawrence Berkeley Laboratory
UNIVERSITY OF CALIFORNIA

Engineering Division

RECEIVED
LAWRENCE
BERKELEY LABORATORY

NOV 20 1985

LIBRARY AND
DOCUMENTS SECTION

Presented at the Seventh International Free Electron Laser Conference, Granlibakken, CA, September 8-13, 1985

SOME CONCEPTS TO IMPROVE THE PERFORMANCE OF DC ELECTROMAGNETIC WIGGLERS

K. Halbach

October 1985

For Reference

Not to be taken from this room

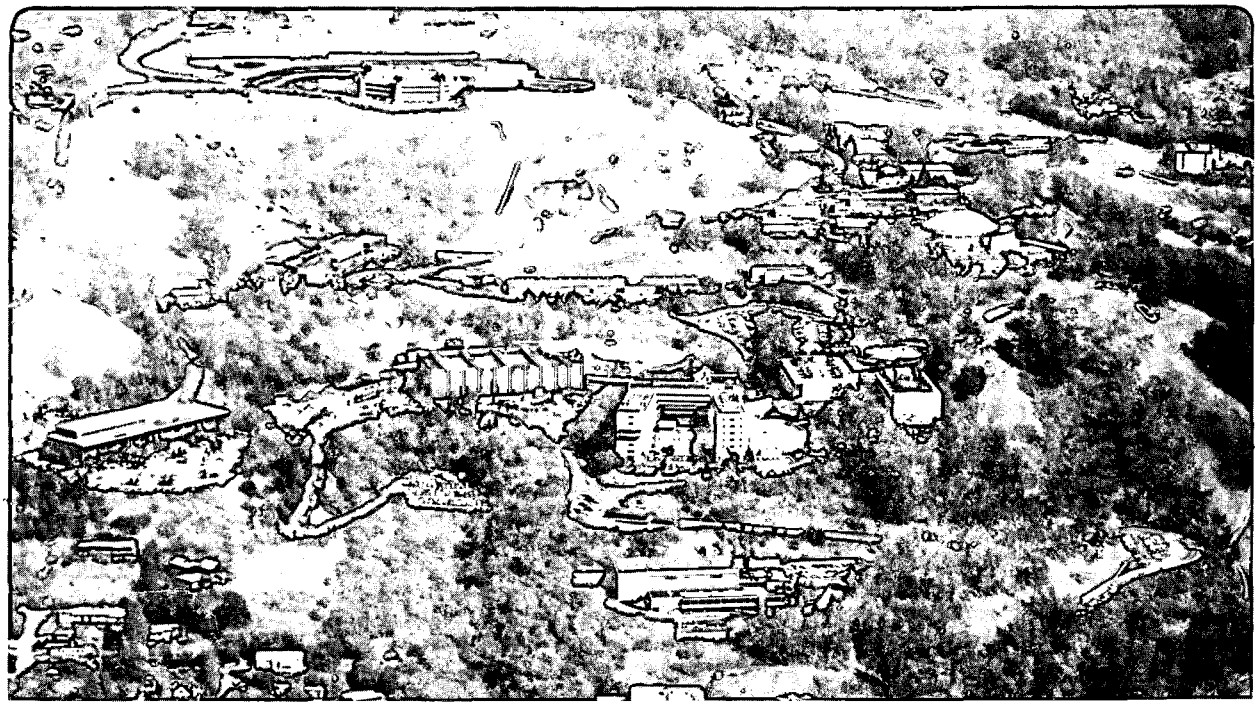

Prepared for the U.S. Department of Energy under Contract DE-AC03-76SF00098

LBL-20502
c.1

DISCLAIMER

This document was prepared as an account of work sponsored by the United States Government. While this document is believed to contain correct information, neither the United States Government nor any agency thereof, nor the Regents of the University of California, nor any of their employees, makes any warranty, express or implied, or assumes any legal responsibility for the accuracy, completeness, or usefulness of any information, apparatus, product, or process disclosed, or represents that its use would not infringe privately owned rights. Reference herein to any specific commercial product, process, or service by its trade name, trademark, manufacturer, or otherwise, does not necessarily constitute or imply its endorsement, recommendation, or favoring by the United States Government or any agency thereof, or the Regents of the University of California. The views and opinions of authors expressed herein do not necessarily state or reflect those of the United States Government or any agency thereof or the Regents of the University of California.

LBL-20502

SOME CONCEPTS TO IMPROVE THE PERFORMANCE OF DC ELECTROMAGNETIC WIGGLERS

K. Halbach

Lawrence Berkeley Laboratory

Center for X-Ray Optics

University of California

Berkeley, California

ABSTRACT

Electromagnetic wigglers have serious performance limitations when the period needs to be small. After a discussion of the nature of these limitations, some concepts will be described that lead to DC electromagnetic wigglers with improved performance. This is accomplished by a better choice of the geometrical arrangement of the soft iron and the coils, and by judicious use of permanent magnet material.

1) Introduction

It is quite clear from the development of the last few years that in the near future there will be a strong demand for tapered undulators/wigglers (U/W), and some of these will have to be quite long. While it will be necessary to make only small field adjustments once the exact details of the needed taper are known, during the development phase, adjustment of the taper over a fairly large range will be necessary. In addition, it will probably always be highly desirable to be able to reduce the field level in selected U/W modules so that one can utilize diagnostic methods other than magnetic field measurements for the determination of needed settings of steering, displacement and phase shift correctors.

An evaluation of the suitability of a number of concepts starts in Section 2 with a discussion of two hybrid U/W with electromagnetic (em) tuning. While the hybrid U/W produces, for the relatively short periods of interest here, the strongest presently achievable fields [see Reference 1], hybrid U/W with em tuning are not well suited when a large adjustment range is needed. For a large adjustment range, the clear choice would be an em U/W if it were possible to achieve field strengths comparable to the fields obtainable with hybrid U/W. Since the reason for the field strength limitation of the em U/W still does not seem to be generally understood [see for instance Reference 2], this generic limitation will be discussed in Section 3. Of the two methods discussed in Section 4 that bring improved performance over the "straight" em U/W, one uses permanent magnet material (PMM) to increase the field level where the saturation of the high permeability iron limits the performance. This approach is carried to an extreme in Section 5, leading to a PMM assisted em U/W with a performance equal or better than that of a hybrid U/W with the same gap and period.

Even though all discussions are more detailed than the previous brief description of the basic concepts [see Reference 3] they are still meant to elucidate specific concepts in the purest possible form. For that reason, idealized systems, addressing a specific aspect of a complete system, are discussed in Sections 2 - 4, leading in a logical way to the concept of the strong em E/W described in Section 5. All considerations in this paper are concerned with the purely periodic part and aspects of U/W, since all performance limiting aspects show up there. The question, "How should one go into and out of an U/W?" is a separate issue and will be covered elsewhere [Reference 4].

2) Hybrid U/W with em Tuning

Figure 1 shows a schematic crossection of a hybrid U/W, but with the part of the PMM closest to the midplane replaced by a coil that makes it possible to tune the U/W electromagnetically. An unpublished analysis [Reference 5] of this U/W shows that if one needs a substantial tuning range, the peak field that is achievable with this U/W is seriously reduced. A problem of similar nature occurs in the U/W shown in Figure 2. This figure shows schematically a projection of the essential part of this hybrid U/W onto the "wiggle-plane". The poles that are supposed to be on identical scalar potentials are connected to the two corresponding scalar potential buses. Appropriately placed correction coils allow the scalar potentials of poles, or groups of poles, to be adjusted. Small corrections, like electron orbit adjustments, can easily be implemented in this design, without loss of overall performance. Unfortunately, when one has an U/W with strong midplane fields and a significant taper has to be produced with the correction coils, the amount of iron required in the bus structure to avoid an intolerable level of saturation becomes prohibitive.

3) Limitations of "Straight" em U/W

In order to analyze a periodic structure like an em U/W, one needs to understand only the upper 1/2 of a $\lambda/4$ - section as schematically shown in Figure 3. This figure shows 1/2 of a coil that has a full width D_1, and 1/2 of an iron pole that has a full width W. In order to show the limitations of this U/W with the simplest possible mathematical analysis, I look only at two dimensional (2D) fields. It is also assumed that the iron has infinite permeability, but I restrict the average flux density at the top of the pole to the largest value of B_2 that is reasonable for the material used. The values for B_2, the average current density j in the coil, and the dimensions h, W, D_1, are considered given, and I want to know how large the magnetic field B_0 in the midplane under the center of the pole can be. The current required to produce the field B_0 can be expressed as

$$\mu_0 I = \mu_0 j D_2 D_1/2 = B_0 h f_1 \tag{1}$$

In this equation, $f_1 > 1$ is a number that can be obtained from analytical calculations that are not of great interest here. The total flux (per unit length in the direction perpendicular to the plane of Figure 3) entering the pole, and leaving it at the top, can be written as follows

$$B_2 W = B_0 W f_2 + 2 \cdot \frac{\mu_0 j D_1 D_2}{D_1} \cdot D_2/2 \tag{2}$$

The second term on the right side of Equation (2) represents the flux associated with the linear increase (starting at the top of the coil) of the field in the coil. The remainder of the flux entering the pole is given by

the first term, with $f_2 > 1$ again calculable with analytical methods. Writing Equation (2) more clearly as

$$B_2 = B_o f_2 + \mu_o j D_2^2/W \tag{3}$$

gives a simple formula to evaluate the soundness of a given design. Solving Equation (1) for D_2, using that in Equation (3), and solving for B_o yields

$$B_o = \frac{B_2}{f_2} \cdot \frac{2}{1 + \sqrt{1 + 16B_2/b}} , \tag{4.1}$$

$$b = \mu_o j W \cdot (D_1/h)^2 \cdot \left(f_2/f_1\right)^2 . \tag{4.2}$$

If

$$16B_2 << b , \tag{5.1}$$

requiring

$$jW >> \left(\frac{4f_1}{f_2}\right)^2 \cdot \left(\frac{h}{D_1}\right)^2 \cdot \frac{B_2}{\mu_o} , \tag{5.2}$$

one obtains the largest possible field

$$B_o \simeq B_2/f_2 . \tag{5.3}$$

The right hand side of Equation (5.2) depends only on the relative dimensions of the U/W, not the absolute scale. Equation (5.2) therefore tells

us that with j being limited because of power dissipation, the performance given by (5.3) can be achieved only by an U/W of fairly large dimensions. The other extreme of achievable performance,

$$B_o \simeq \sqrt{\mu_o \, j \, W \, B_2} \cdot D_1/(2f_1 h) \quad , \tag{6.1}$$

holds for an U/W with small dimensions, such that

$$\sqrt{\frac{b}{16B_2}} \ll 1 \quad . \tag{6.2}$$

To give a reference point, for $h/\lambda = .1875$ and $D_1/\lambda = .2875$, w/λ, f_1 and f_2 are given by $w/\lambda = .2125$; $f_1 = 1.17$; $f_2 = 2.35$, and with $B_2 = 1.8T$,

$$b/16B_2 = j\lambda \cdot 8.8 \; 10^{-8} \quad .$$

Measuring j in kA/cm^2 and λ in cm gives

$$\frac{b}{16B_2} = \frac{j \; (kA \; cm^{-2}) \cdot \lambda(cm)}{113.7} \quad . \tag{7}$$

Equation (7), together with Equations (5) and Equations (6), shows that under most circumstances of interest, one will be close to the limit given by Equation (6.1), while the limit expressed by Equation (5.3) will rarely, if ever, be achievable.

Unfortunately, real life is even worse, since the 3-dimensional (3D) fringe flux at the lateral end of the U/W increases the maximum field level in the iron beyond the level calculated above.

4) Methods to Improve the Performance of the em U/W

In order to improve the performance of the basic em U/W shown in Figure 3, one can consider modification of the 2D crossection of the U/W, again ignoring 3D effects. Figure 4a shows again the basic configuration. Figure 4b shows a similar configuration, using again only one coil with rectangular crossection, but also using a shaped iron pole. Figure 4c shows a shaped pole, but two coils of rectangular crossection are allowed. Figure 4d shows a 2D crossection with a shaped pole, and a coil that fills the total space available for the coil. Each of these systems was optimized by shaping the pole in such a way that the average flux density in the shaped part of the pole has the constant value B_2, and one free geometric length was chosen to give the largest field for given B_2, j, h/λ, D_1/λ, λ. Using the same values for these quantities as in Section 3, and using j = 1 kA cm^{-2} and λ = 8 cm gives for B_0 for the four cases shown schematically in Figures 4a - 4d:

.313 T; .329 T; .362 T; .394 T .

From these numbers it is clear that while the field obtainable with a system as in Figure 4d is only 26% higher than that achievable with a system as in Figure 4a, to achieve this increase by increasing j in the straight em U/W requires 2 kA cm^{-2}, leading to an increase of the dissipated power density in the coil by a factor four.

As stated above, 3D fringe fields of the lateral ends of the iron poles increase the field in the iron. Figure 5 shows schematically these fringe fields. If nothing is done to ameliorate the increased saturation of the iron

due to these fields, the performance of the em U/W can be seriously compromised. A very powerful method to overcome this problem is the use of PMM: Figure 6 shows schematically the iron poles of an em U/W with PMM attached to its lateral ends, surrounded by the coils. It should be noticed that while the fringe field decreases linearly over the length of the pole, the PMM adds an essentially constant, and strong, field into the whole area of contact between the pole and the PMM. For that reason, the net effect can be a reduction of the peak flux density in the iron to a value below that computed for the 2D case.

A test section of a PMM assisted em U/W with the dimensions used above has been constructed and tested. In good agreement with theoretical predictions, the field level where a 1% field reduction due to saturation was encountered was increased from .185 T to .32 T by the use of Sm Co_5 blocks.

A design and optimization of a system that uses both performance improvement methods discussed in this section has not yet been done. The reason is not a lack of confidence that such a system would be worthwhile investigating, it is more a question of priorities. The system described in the next section is, in this author's opinion, in many respects superior to such a system, provided one really needs the strongest possible em U/W.

5) <u>A Strong em U/W</u>

Figure 7 shows a schematic crossection of an em U/W with PMM assistance that combines the best aspects and avoids the worst aspects of an em U/W and a hybrid U/W. As in the hybrid U/W with scalar potential buses shown in Figure 2, all poles that are supposed to be on identical potentials go to one side of the U/W and are there connected to their scalar potential buses. Similarly, the other poles are connected to buses on the other side of the U/W. The

poles and their extensions to the buses are shaped such that the crossectional areas of iron that are in close proximity and are on opposite potentials are minimized. The scalar potential buses are connected by iron bridges that carry the main excitation coils, with correction coils placed where wanted and/or needed. The main coils can be rather far away from the gap and can therefore be operated at a low current density. It is also clear that one set of coils can control the scalar potentials of as many periods as is desired.

To increase the field level in the gap when saturation of the iron becomes a problem, PMM is placed between the poles, just as it is in a hybrid U/W. Under most circumstances it is quite important to design the PMM blocks such that locally they are wider than the iron part with the smaller local dimensions, as indicated in Figure 7. If needed, PMM can also be placed in the V-shaped region between the coil and the poles.

For an U/W with the same geometrical dimensions as used in previous sections, and a tolerable field level B_2 = 1.8 T in the iron, an analytical analysis of this system yields B_0 = .6 T when using $SmCo_5$ as the PMM. This compares favorably to the B_0 = .55 T of a $SmCo_5$ hybrid U/W that uses Vanadium Permendur with a saturation induction of 2.2 T.

The derivative of the maximum field B_2 in the iron with respect to the field B_0 in the gap is, for this specific design, $dB_2/dB_0 = 15$. Allowing the extreme case that $|B_2| \leq 1.8$ T, but a reverse in sign, one obtains a tuning range of .24 T where the field B_0 is essentially independent of the iron and PMM, leading to a minimum field level of B_0 = .36 T. This means that at field levels significantly lower than .36 T, saturation of the iron will be felt again and will lead to lower field quality. This is a specific manifestation of the general property of any

PMM assisted em U/W that the tuning range is less than twice the maximum achievable field. Under most circumstances, this is not a disablingly severe restriction since the available tuning range will be sufficiently large to enable one to perform the really important tasks, such as tapering the U/W, tuning it so that one can deduce from the synchrotron light spectrum what corrections are needed, etc. Whether or not B_0 can be taken to $B_0 = 0$ without causing strong saturation of the iron depends on many details and will therefore not be discussed here. Similarly it is too early to discuss the details of the implementation of the excitation patterns of the poles [Reference 4] that are extremely useful when one wants to operate a tapered em U/W, or when one needs to change the excitation of a module of an em U/W used as a component of a synchrotron light source.

It has to be pointed out that Figure 7 is meant to show only the basic aspects of a seemingly promising new concept. It is, for instance, necessary to connect a top bus magnetically to a bottom bus if one wants to make steering corrections. Details can be changed to get even better performance than indicated above. For instance, in Figure 7, the crossectional area of the iron that conducts the flux from the pole area to the scalar potential bus is shown to stay essentially constant. By increasing that crossection in the appropriate location, the magnetic characteristics of the magnet can be improved. Also, the basic concept shown in Figure 7 can be implemented in other ways. When access to the vacuum chamber, or a variable gap, is important, one would implement a magnet much in the way Figure 7 shows. However, a simpler construction is possible if the bridges with the coils are placed to the right and left of the gap; one can construct such a magnet by using only one main coil, etc.

6) Acknowledgments

During the development of the ideas described here, I had interactions with many people, but particularly stimulating discussions with D. Attwood, E. H. Hoyer, K-Je. Kim, A. M. Sessler (LBL), G. A. Deis, D. Prosnitz, E. T. Scharlemann (LLNL), and B.M. Kincaid (AT&T).

This work was supported by the U.S. Department of Energy under Contract DE-AC03-76SF00098.

REFERENCES

1) K. Halbach; Journal de Physique, 44, C1-211 (1983)

2) V. L. Granatstein, W. W. Destler, I. D. Mayergoyz; Applied Physics Letters 47, 643 (1985)

3) K. Halbach, Proceedings of the International Conference on X-Ray and VUV Synchrotron Radiation Instrumentation, 1985

4) K. Halbach, Proceedings of this Conference

5) K. Halbach, ELF Notes #93; #94; (3/84)

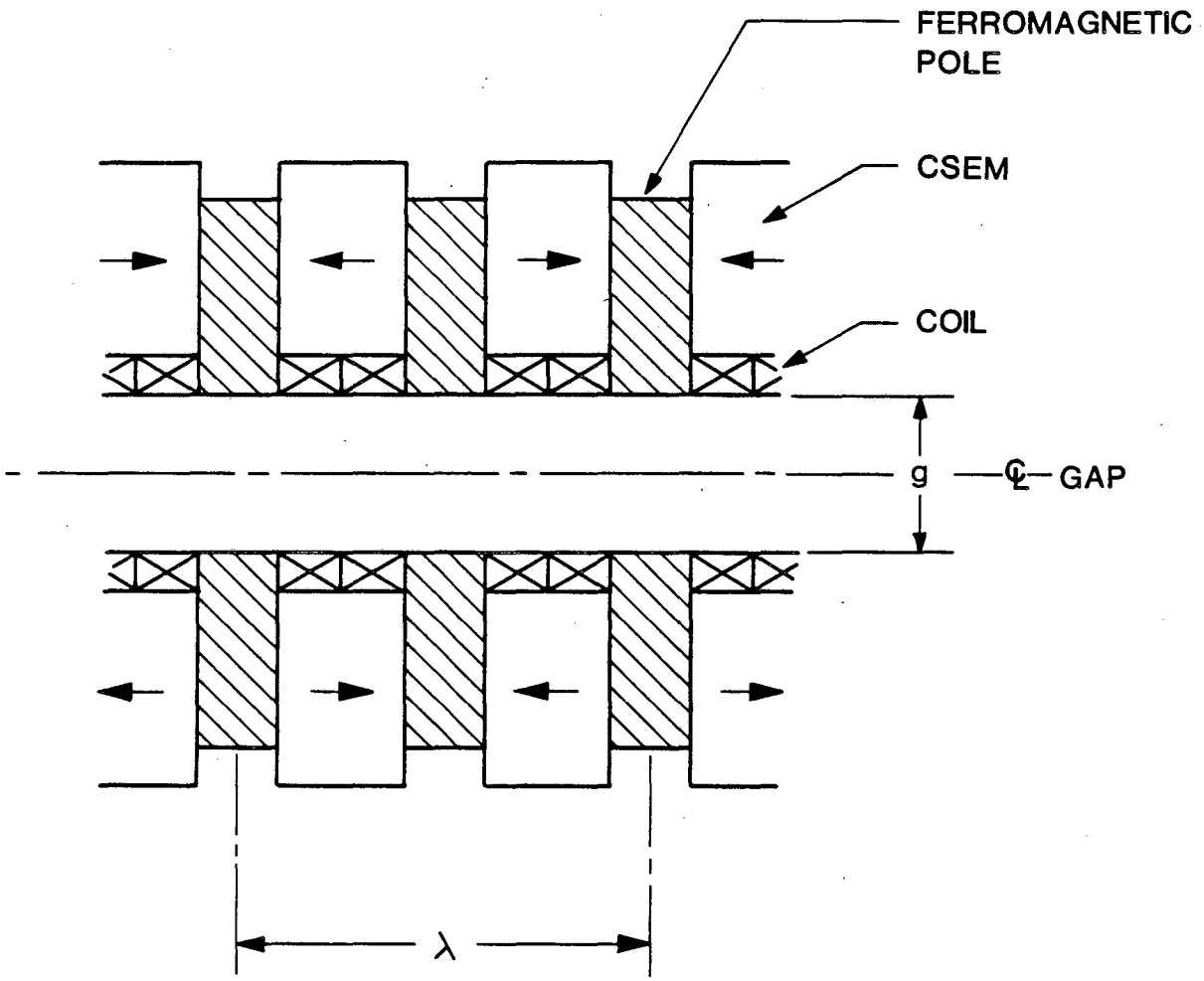

Figure 1. Hybrid U/W with em Tuning

XBL 858-3718

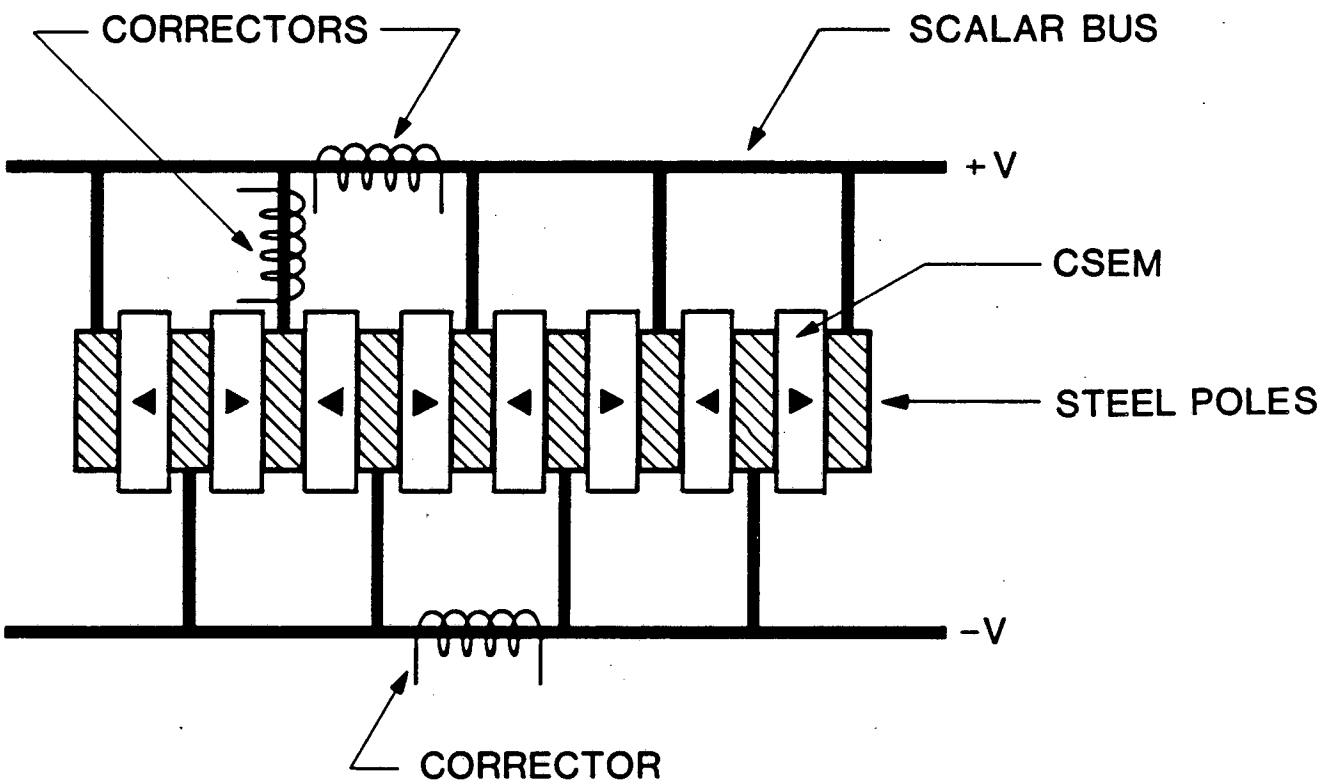

Figure 2. Hybrid U/W with V-Bus XBL 858-3712

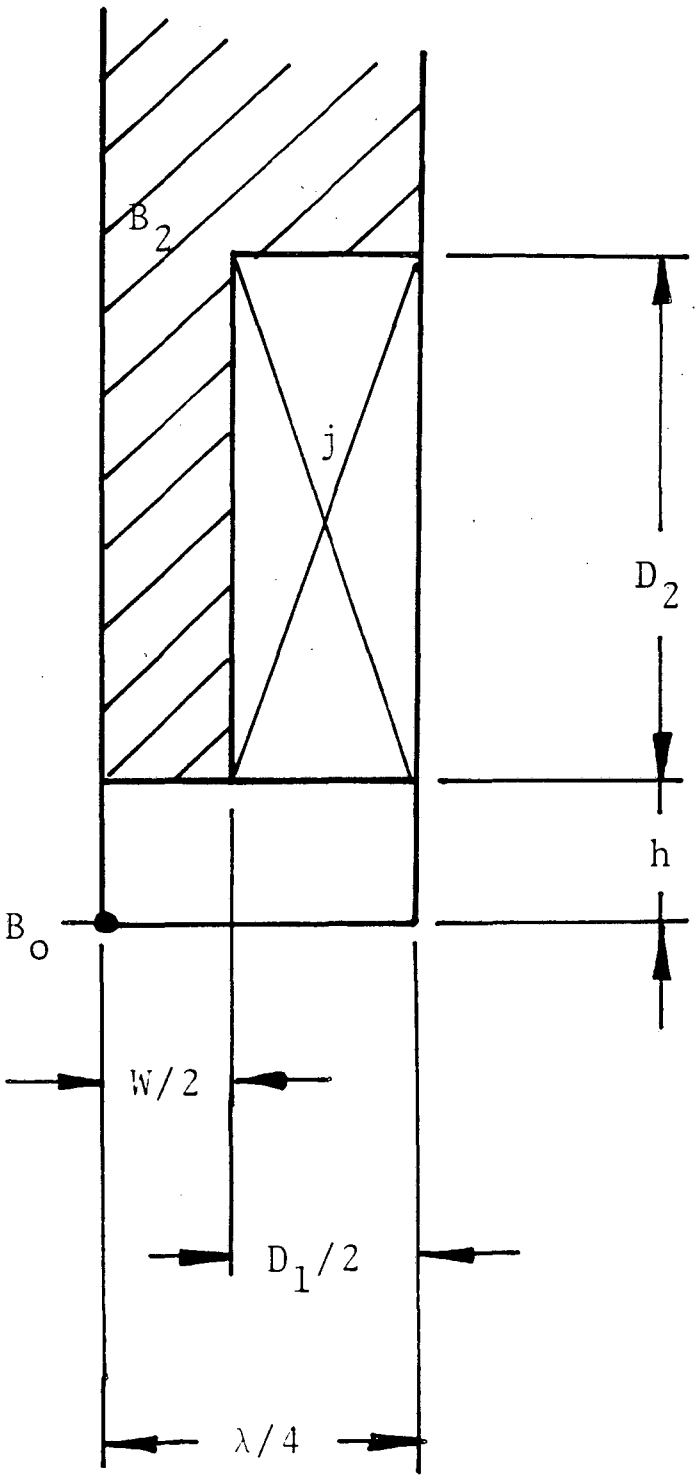

XBL 8510-4375

Figure 3. λ/4 Section of Straight em U/W

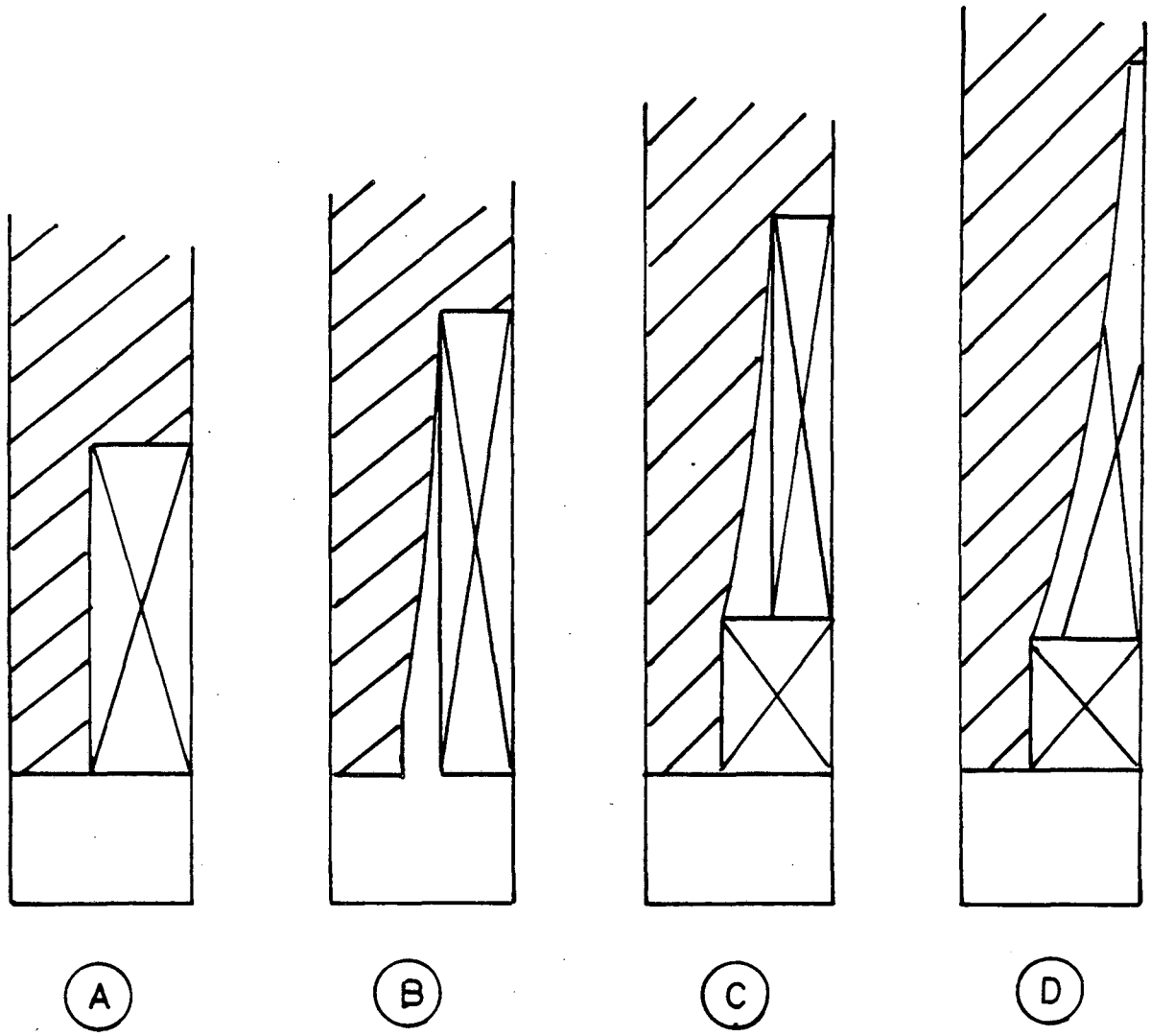

Figure 4. Four Basic em U/W Configurations XBL 8510-4376

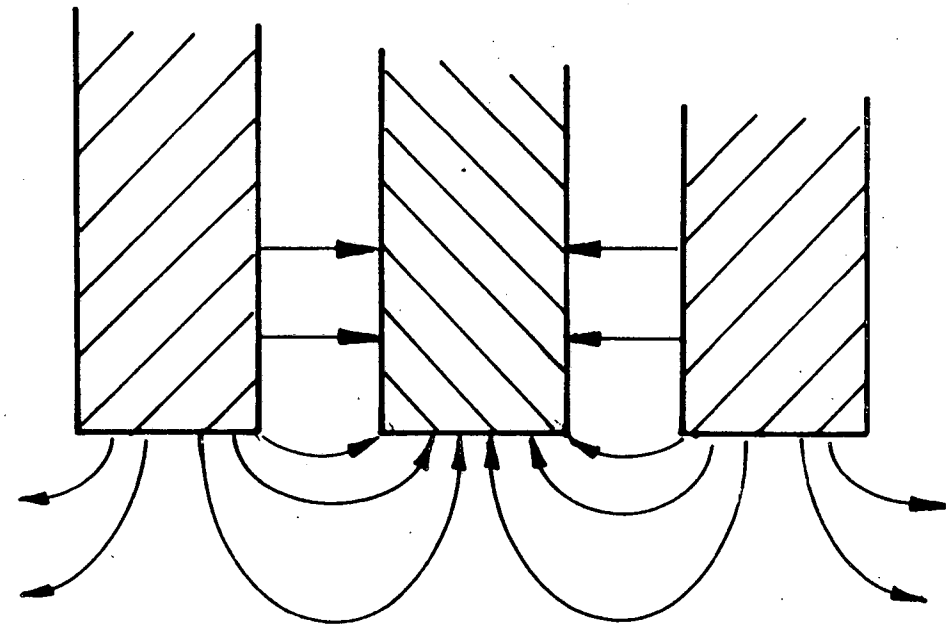

XBL 8510-4374

Figure 5. Fringe Field Pattern at Lateral Ends of Soft and Iron Poles

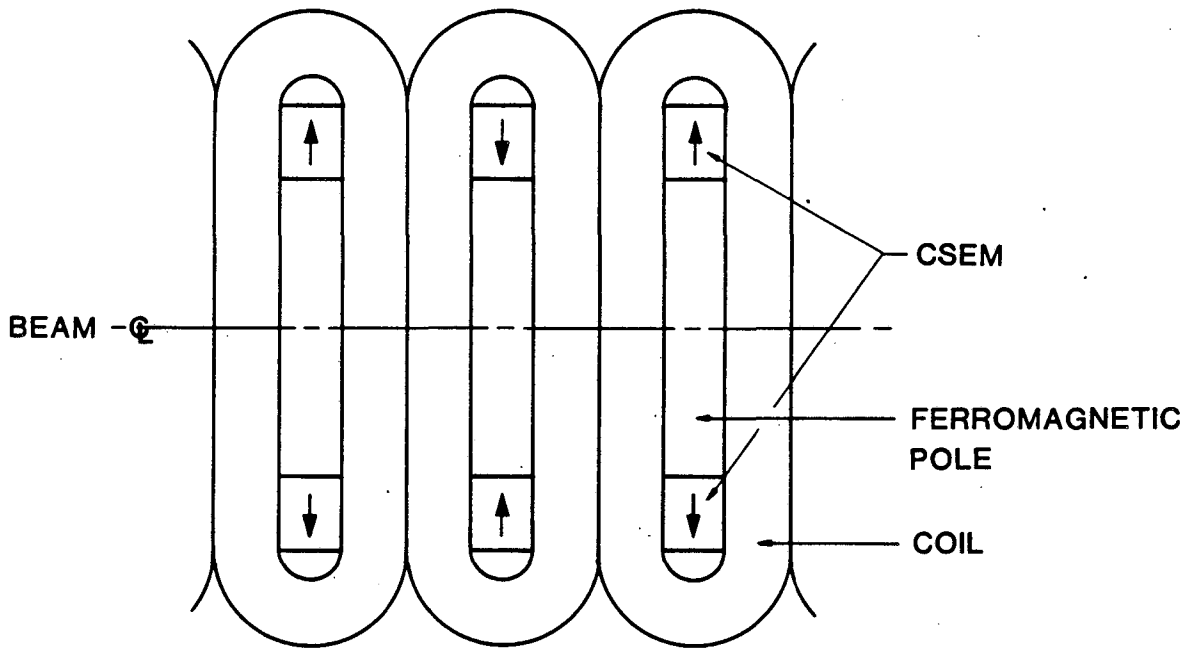

Figure 6. Soft Iron Pole with Attached PMM and Coil XBL 858-3714

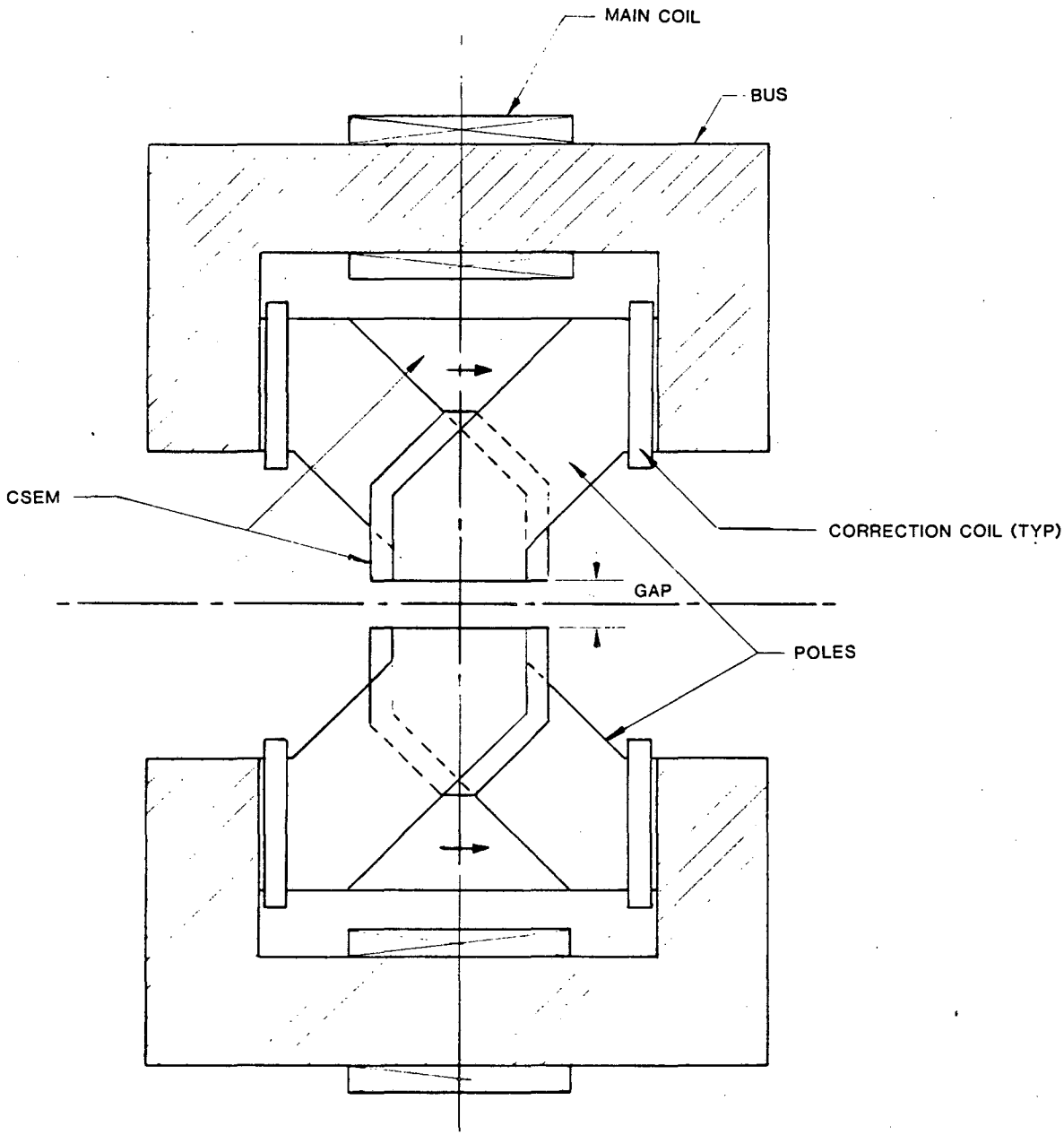

Figure 7. Strong em U/W

XBL 858 3715

This report was done with support from the Department of Energy. Any conclusions or opinions expressed in this report represent solely those of the author(s) and not necessarily those of The Regents of the University of California, the Lawrence Berkeley Laboratory or the Department of Energy.

Reference to a company or product name does not imply approval or recommendation of the product by the University of California or the U.S. Department of Energy to the exclusion of others that may be suitable.

TECHNICAL INFORMATION DEPARTMENT
LAWRENCE BERKELEY LABORATORY
UNIVERSITY OF CALIFORNIA
BERKELEY, CALIFORNIA 94720