UC-37
LBL-20509
c.1

Lawrence Berkeley Laboratory

UNIVERSITY OF CALIFORNIA

RECEIVED
LAWRENCE
BERKELEY LABORATORY
JAN 14 1986
LIBRARY AND
DOCUMENTS SECTION

Materials & Molecular Research Division

Presented at the Materials Research Society
1985 Fall Meeting, Symposium on Materials Problem
Solving with the Transmission Electron Microscope,
Boston, MA, December 2-7, 1985

CONTRIBUTIONS OF ELECTRON MICROSCOPY TO THE UNDERSTANDING OF REACTIONS ON COMPOUND SEMICONDUCTOR SURFACES

T. Sands

November 1985

For Reference

Not to be taken from this room

LBL-20509
c.1

Prepared for the U.S. Department of Energy under Contract DE-AC03-76SF00098

DISCLAIMER

This document was prepared as an account of work sponsored by the United States Government. While this document is believed to contain correct information, neither the United States Government nor any agency thereof, nor the Regents of the University of California, nor any of their employees, makes any warranty, express or implied, or assumes any legal responsibility for the accuracy, completeness, or usefulness of any information, apparatus, product, or process disclosed, or represents that its use would not infringe privately owned rights. Reference herein to any specific commercial product, process, or service by its trade name, trademark, manufacturer, or otherwise, does not necessarily constitute or imply its endorsement, recommendation, or favoring by the United States Government or any agency thereof, or the Regents of the University of California. The views and opinions of authors expressed herein do not necessarily state or reflect those of the United States Government or any agency thereof or the Regents of the University of California.

CONTRIBUTIONS OF ELECTRON MICROSCOPY TO THE UNDERSTANDING OF REACTIONS ON COMPOUND SEMICONDUCTOR SURFACES

T. SANDS
Bell Communications Research, Inc., Murray Hill, NJ 07974 and Lawrence Berkeley Laboratory, University of California, Berkeley, CA 94720.

ABSTRACT

Reacted films on compound semiconductor substrates present challenging materials characterization problems which often require the application of transmission electron microscopy (TEM) techniques. In this paper, both the problem - solving potential of the TEM techniques and the limits imposed by preparation of thin film/compound semiconductor TEM specimens are discussed. Studies of the Ni/GaAs, CuCl(aq)/CdS and Pd/GaAs reactions exemplify the role of TEM in identifying and determining the spatial distribution of interface - stabilized polymorphs and new ternary phases (e.g. tetragonal Cu_2S, Ni_3GaAs and Pd_xGaAs). These examples also serve to clarify the relationship between TEM and complementary analysis techniques such as Rutherford backscattering spectrometry, Auger electron spectroscopy and glancing-angle x-ray diffraction. In particular, it is argued that a combination of (1) high-spatial-resolution information obtained by TEM and (2) an indication of the "average" behavior provided by data from a complementary characterization technique provide the minimum quality and quantity of data necessary to understand most reactions on compound semiconductor substrates.

INTRODUCTION

Reacted thin films are often utilized as contacts or heterostructure layers in compound semiconductor photonic and electronic devices. The attractiveness of reacted thin films for these applications stems largely from the adherence of the film and the cleanliness of the interface which result from the consumption of the semiconductor surface region during the reaction. However, implementation of reacted thin films necessitates the accurate control of reacted film morphologies in order to satisfy performance and stability criteria. For some applications, such as Schottky barriers, the ability to fabricate reacted thin films consisting of a single phase may be essential in obtaining and retaining controllable and reproducible electrical properties. Such stringent requirements, however, may be difficult to satisfy since reactions on compound semiconductor surfaces are inherently complicated, even in the simplest cases, due to the involvement of a minimum of three atomic species. For example the introduced reacting species, be they deposited metal atoms, gaseous molecules or ions in an aqueous solution, may react preferentially with one component of the compound semiconductor. As will be illustrated below, the resulting morphologies can be quite complex. In order to fully understand these reactions, one must identify the product phases (structure and composition) and determine the factors which influence the distribution of these phases. It is in this regard that transmission electron microscopy (TEM) and related techniques prove valuable.

In this paper, the application of TEM techniques to the study of reactions on compound semiconductor surfaces [1] is discussed. Specific examples are used to illustrate the role of TEM in generating the experimental data necessary to understand a thin film reaction.

APPLICATION OF TEM

Depth profiling techniques such as Rutherford backscattering spectrometry (RBS) and Auger sputter profiling (AES) combined with x-ray (XRD) or electron diffraction provide the information necessary to determine the phase distribution in a reacted film, provided the film is free of gross lateral nonuniformities [2]. However, most reactions on compound semiconductor surfaces result in uniform films under only very restricted conditions, if any. Thus, in order to design uniform thin films for device applications, the mechanisms for the development of lateral irregularities must be determined. In the effort to understand and engineer reacted thin films, electron microscopy contributes two important types of information: 1) identification of phases (structure and composition) and 2) determination of the distribution of phases and defects (e.g. dislocations, grain boundaries, interphase boundaries and lateral variations in the native oxide/hydrocarbon layer).

Investigation of a thin film reaction by TEM involves the preparation of both plan-view and cross-sectional specimens from each sample. Plan-view specimens are usually thinned by chemical polishing from the back side. If the thin film is not attacked by the polishing solution, the specimen geometry will be similar to that shown schematically in Fig. 1. Of course, the film must be electron transparent. Consequently, plan-view microscopy is limited to film thicknesses less than ~50 nm for dense films such as W to ~200 nm for low density materials such as Si (assuming an operating voltage of ~200 keV). If these thickness requirements are met, electron diffraction and imaging of plan-view specimens can help to identify phases, determine orientation relationships and investigate lateral uniformity. The plan-view geometry, however, yields little information regarding the distribution of phases normal to the surface. Likewise, analytical microscopy results (e.g. energy dispersive analysis of x-rays (EDS) and electron energy loss spectroscopy (EELS)) from plan-view samples are ambiguous unless it has been determined by other means that the film is uniform as a function of depth.

For most studies, the shortcomings of the plan-view geometry necessitate the preparation of cross-sectional TEM specimens. These specimens may be prepared by bonding cleaved strips face-to-face with epoxy followed by mechanical thinning to 40-100μm and finally, ion milling to perforation. Figure 2 depicts these steps in a schematic fashion. A wide variety of additional steps may be added depending on the mechanical properties of the substrate and film. For example: mechanical dimpling prior to ion thinning can reduce specimen preparation time and ensure that the perforation is centered at the interface of interest; the grit size used during the final mechanical thinning step can be increased to increase the amount of thin area at the interface or reduced to produce a more circular perforation; and the specimen may be mounted on a grid or embedded in epoxy to reduce the risk of damage during handling. The most critical procedure, however, is the final ion thinning step. The choice of ion species, accelerating voltage and specimen - stage temperature may drastically influence the final result. For example, ion milling of InP with argon results in the formation of In droplets on the specimen surface. This problem can be alleviated by milling instead with iodine [3]. For GaAs, milling with argon at 4-5 kV in a stage cooled by liquid N_2 generally results in satisfactory samples. Unfortunately, however, milling conditions suitable for the substrate may not be suitable for the thin film, particularly if the thin film is a refractory material. Strong interatomic bonds in a refractory material (e.g. W, Ta and TiN) result in a relatively low sputtering rate making it nearly impossible to thin the interfacial region uniformly.

Cross-sectional specimens of samples with zincblende substrates are most commonly prepared with <110> surface normals. This is convenient from the standpoint of specimen preparation since the {110} planes are cleavage planes. The principal interest in this orientation, however, is that two sets of {111} slip planes may be viewed edge-on, thereby fascilitating the analysis of defect structures. For many applications it is necessary to examine cross-sectional samples with two or more surface normals. In particular, reacted films on (100) surfaces of zincblende substrates should be examined along [011] and [01$\bar{1}$] directions since these directions in the (100) surface are not equivalent. For example, the hexagonal phase, Pd_xGaAs, which forms during deposition of Pd onto (100) GaAs is textured with [0001] parallel to $[01\bar{1}]_{GaAs}$ [4]. Grains with [0001] parallel to $[011]_{GaAs}$ are not observed. In addition, examination of specimens with <100> surface normals will become increasingly common now that microscopes with point-to-point resolution better than 0.2 nm are available. Such a specimen configuration allows the resolution of individual columns of anions and cations in zincblende materials. The projected atom positions in the three orientations [01$\bar{1}$], [010] and [011] are depicted in Fig. 3.

The complete battery of TEM techniques may be applied to cross-sectional specimens. Phases may be identified by combining microdiffraction or lattice imaging with EDS from the same region (probe size $\geq$10 nm). Furthermore, precise film thickness measurements can be made by recording a lattice image of the substrate below the interface for magnification calibration. Combined with analysis of plan-view specimens, TEM of cross-sectional specimens provides a detailed description of the film morphology.

Although one could, in principle, employ TEM techniques exclusively to fully characterize a thin film reaction, there are two major drawbacks to this approach: (1) Exclusive implementation of TEM is laborious and time-consuming. A more efficient approach is to employ RBS, glancing-angle XRD or AES with sputtering for analysis over a matrix of deposition and annealing conditions. Specific samples can then be chosen for detailed TEM analysis. (2) The small area sampled by a TEM specimen may not be representative of the average morphology. Again, the application of RBS, AES and XRD should resolve uncertainties related to insufficient sampling. With these caveats in mind, the following examples serve to illustrate the utility of TEM for the analysis of thin film reactions on compound semiconductor surfaces. Emphasis is placed both on situations in which the high spatial resolution of TEM is required and on problems in which TEM data has forced the reinterpretation of previously existing data obtained by other characterization techniques.

EXAMPLES

The high-resolution and analytical data presented below were acquired with a top-entry JEOL JEM 200CX and a JEOL 200CX TEM/STEM equipped with a high-angle EDS detector, respectively. Both microscopes were operated at 200 keV.

The Ni-GaAs reaction

The following example demonstrates the application of TEM techniques to resolve basic issues such as (1) the composition of a new phase, (2) the dominant moving species and (3) whether a phase is truely a ternary compound or instead, an intimate mixture of binary compounds.

Nickel is an active component in several types of ohmic contacts to GaAs, including the popular Au-Ni-Ge "alloyed" contact [5]. In an attempt to elucidate the role of Ni in such contacts, the simpler system, Ni/GaAs, has been studied. In 1980 Ogawa [6] reported that reaction of Ni thin films at temperatures less than ~400°C leads to the formation of a ternary Ni_xGaAs compound. Quantitation of AES data suggested that $x \cong 2$. More recently, Lahav et al. [7] confirmed this result, again with AES. Since quantitation of AES results, however, is not straightforward, especially if sputtering is employed [8], it is desirable to verify this result with another characterization technique. Furthermore, the value of x becomes especially important if Ni is reacted with GaAs to form a shallow contact. An error in the estimated value of x will be reflected in an error in the predicted amount of GaAs consumed by the reaction.

In an effort to determine the value of x we have deposited Ni by electron gun evaporation onto chemically cleaned (9:1 DI H_2O: HCl) (100) GaAs substrates. The thickness of the as-deposited film was measured to be 44 ± 2 nm by cross-sectional TEM using lattice images of the GaAs substrate for calibration. After annealing at 220°C for 10 minutes in flowing forming gas, approximately 90 percent of the film area (measured from plan-view samples) is completely reacted to Ni_xGaAs. Cross-sectional TEM images show the reacted layer thickness to be 88 ± 2 nm. Therefore, assuming conservation of Ni atoms and a void-free as-deposited Ni film, the concentration of Ni in the reacted film should be ~50 percent of [Ni] in the as-deposited film. By electron diffraction, the Ni_xGaAs unit cell volume was measured to be 0.066 nm^3. Thus, the hexagonal Ni_xGaAs unit cell should contain 3.0 ± 0.2 Ni atoms.

Figure 4 reveals the cause of the unreacted patches of Ni. It is clear that the thin (~1-2 nm) native oxide/hydrocarbon layer has locally inhibited the initiation of the reaction. Although not desirable from a device standpoint, such a film morphology allows measurement of the amount of GaAs consumed during the reaction (Fig. 5). This measurement, in turn, yields a result of one Ga and one As atom per unit cell. In addition, the position of the oxide layer in Fig. 4 shows that Ni is the dominant moving species. Thus, from simple measurements on one cross-sectional micrograph (albeit the correct one), the nominal composition of the ternary phase has been shown to be Ni_3GaAs rather than Ni_2GaAs. This is further verified by standardless quantitation of EDS spectra from the same samples (Fig. 6). Spectra acquired with a probe size smaller than the Ni_3GaAs grain size (~20 nm) also provide conclusive evidence that Ni_3GaAs is a single phase rather than an intimate mixture of two binary phases. As an additional check, an RBS spectra taken from the sample imaged in Fig. 4 is consistant with a simulation using the TEM data as input (Fig. 7). This result shows that the TEM data is representative of a larger area ($\geq$ 1mm^2) as well.

Determination of x has also led to a structural model for Ni_3GaAs and has clarified the nature of the higher temperature ($\geq$ 400°C) "decomposition" into binary Ni-As and Ni-Ga phases [9].

The CuCl (aq.) - CdS reaction

This second example serves to illustrate the role of cross-sectional TEM in the identification of interfacial phases which are difficult to detect by other means.

For more than 20 years, the Cu_2S/CdS solar cell had been regarded as the most promising polycrystalline thin-film device for terrestrial applications. Unfortunately, the Cu_2S/CdS system was plagued with problems of inadequate reproducibility and stability. The TEM work described below shows that these problems are inherent with this materials system.

The Cu_2S/CdS heterojunction is formed by immersion of CdS (wurtzite structure) into an aqueous CuCl bath at ~ 95°C [10]. The exchange of Cd^{++} and Cu^{+} cations results in the formation of a topotaxial layer of Cu_2S which shares an (distorted) h.c.p. sulfur sublattice with the CdS substrate. The copper atoms adopt the complicated superstructure of the equilibrium phase, low chalcocite. The irregular film morphology is shown in the plan-view micrograph of Fig. 8(a). Diffraction patterns reveal a nominally nonocrystalline low chalcocite film (Fig. 8(b)). Cross-sectional images, however, show that the portions of the interface which are parallel to the CdS basal planes contain a second Cu_2S phase (Fig. 9). The structure of the "tetragonal phase" is based on a distorted f.c.c. sublattice. This tetragonal phase is a high-pressure polymorph of the equilibrium low chalcocite phase [11]. Sands et al. [12] have argued that its presence is related to the reduction in the gradient of lattice parameters which results when a thin film of the tetragonal phase is inserted between low chalcocite and the basal plane of CdS. Since the h.c.p. - f.c.c. structural relationship is nearly ideal only for the basal plane, low chalcocite is found to be the dominant phase for surfaces inclined to {0001} CdS.

From the characterization point-of-view, the tetragonal phase is virtually undetectable by means other than cross-sectional TEM for at least two reasons: (1) the diffraction spots from the tetragonal phase overlap, to a large extent, the diffraction spots of low chalcocite when examined in plan-view; and (2) although the tetragonal phase/CdS interface area is comparable to the low chalcocite/CdS interface area, the volume fraction of tetragonal phase in the Cu_2S layer is extremely low since the bulk of the Cu_2S is in the form of deep penetrations of low chalcocite near cracks.

The observation that much of the metallurgical junction is composed of tetragonal phase/CdS interfaces may be itself sufficient to explain the lack of reproducibility in the electronic and optical properties of this anisotype heterojunction [12].

The Pd-GaAs reaction

This final example shows that TEM techniques are often necessary to conclusively identify phases in ternary systems. In particular, attempts to identify phases by glancing-angle XRD alone can lead to ambiguities.

In the case of a binary system, the available powder diffraction information [13] is usually sufficient to identify phases by XRD. However, the addition of a third component, as in a metal/compound semiconductor reaction can result in the formation of previously unreported phases. For example, XRD studies of the Pd-GaAs reaction were in agreement that a major phase formed during annealing at or below 250°C was PdGa [14,15]. However, Oelhafen et al, [16] employing TEM and x-ray photoelectron spectroscopy, showed that the first phase is a ternary compound with approximate composition Pd_2GaAs. The Bravais lattice and unit cell dimensions were later determined by Kuan et al. [17] and Sands et al. [18]. By comparison of the calculated XRD peak positions for PdGa and Pd_xGaAs, (Table I), it becomes clear that the XRD data for $2\theta > 20°$ can be completely explained by diffraction from Pd_xGaAs. A similar ambiguity in the XRD data makes it difficult to distinguish $PdAs_2$ from a second ternary phase, Pd_4GaAs, by XRD alone [18].

CONCLUSION

As the examples above help to demonstrate, a reaction on a compound semiconductor substrate usually results in an inhomogeneous distribution of product phases. Furthermore, it is likely that some of these phases

will be new ternary compounds or interface-stabilized polymorphs of equilibrium binary compounds. Thus, complete characterization of a thin film reaction may necessitate the application of TEM techniques in order to acquire both structural and compositional information from regions as small as 1000 nm^3. In combination with complementary analysis by RBS, AES and XRD, this TEM data can be sufficient to understand and, in some cases, control reactions on compound semiconductor substrates.

ACKNOWLEDGEMENTS

The author would like to thank his coworkers, Dr. V. G. Keramidas, Bell Communications Research, Inc., A. J. Yu, Cornell University, and K. M. Yu, Professor R. Gronsky and Professor J. Washburn, Lawrence Berkeley Laboratory, for their contributions to this work. The assistance provided by the staff of the National Center for Electron Microscopy, Lawrence Berkeley Laboratory, is also gratefully acknowledged.

This work was supported by the Director, Office of Energy Research, Office of Basic Energy Sciences, Materials Sciences Division of the U. S. Department of Energy under Contract No. DE-AC03-76SF00098.

REFERENCES

1. The term "surface" is used loosely here in the description of reactions which initiate at the original semiconductor surface resulting in the propagation of an interface into the compound semiconductor.

2. J. W. Mayer and J. M. Poate, in Thin Films - Interdiffusion and Reactions, edited by J. M. Poate, K. N. Tu and J. W. Mayer (Wiley, New York, 1978) p. 119.

3. N. G. Chew and A. G. Cullis, Appl. Phys. Lett. 44, 142 (1984).

4. T. Sands, V. G. Keramidas, A. J. Yu, K. M. Yu, R. Gronsky and J. Washburn, Mat. Res. Soc. Symp. Proc., Thin Films - Interfaces and Phenomena, Fall meeting, 1985, in press.

5. C. J. Palmstrom and D. V. Morgan in Gallium Arsenide, edited by M. J. Howes and D. V. Morgan (Wiley, New York, 1985) p. 229.

6. M. Ogawa, Thin Solid Films 70, 181 (1980).

7. A. Lahav, M. Eizenberg and Y. Komen, Mat. Res. Soc. Symp. Proc. 37, 641 (1985).

8. J. W. Mayer and J. M. Poate, in Thin Films - Interdiffusion and Reactions, edited by J. M. Poate, K. N. Tu and J. W. Mayer (Wiley, New York, 1978) p. 144.

9. T. Sands, V. G. Keramidas, J. Washburn and R. Gronsky, Appl. Phys. Lett. (1986), in press.

10. L. R. Shiozawa, G. A. Sullivan and F. Augustine, Proc. 7th IEEE Photovoltaics Spec. Conf. (IEEE, New York, 1968) p. 39.

11. B. J. Skinner, Econ. Geology 65, 724 (1970).

12. T. Sands, J. Washburn and R. Gronsky, Solar Energy Materials 10, 349 (1984).

13. Powder Diffraction File (JCPDS International Centre for Diffraction Data, Swarthmore, Penn., 1980).

14. J. O. Olowolafe, P. S. Ho, M. J. Hovel, J. E. Lewis and J. M. Woodall, J. Appl. Phys. 50, 955 (1979).

15. X-F. Zeng and D. D. L. Chung, J. Vac. Sci. Technol., 21, 611 (1982).

16. P. Oelhafen, J. L. Freeouf, T. S. Kuan, T. N. Jackson and P. E. Batson, J. Vac. Sci. Technol. B1, 588 (1983).

17. T. S. Kuan, J. L. Freeouf, P. E. Batson and E. L. Wilkie, J. Appl. Phys. 58, 1519 (1985).

18. T. Sands, V. G. Keramidas, R. Gronsky and J. Washburn, Mat. Lett. 3, 409 (1985); Thin Solid Films (1985), in press.

TABLE I

Comparison of PdGa and phase I plane spacings

PdGa			Phase I		
Indicies	Plane spacing [nm]	2θ [degrees]	Indicies	Plane spacing [nm]	2θ [degrees]
			$0\bar{1}10$	0.583	15.2
001	0.489	18.1			
110	0.346	25.8	$000\underline{1},2\bar{1}\bar{1}0$	0.338	26.4
111	0.282	31.7	$01\bar{1}1,2\bar{2}00$	0.292	30.6
002	0.245	36.8	$2\bar{1}\bar{1}1$	0.239	37.6
210	0.219	41.3	$02\bar{2}1,1\bar{3}20$	0.221	40.9
211	0.200	45.4	$03\bar{3}0$	0.194	46.8
220	0.173	53.0	$000\underline{2},03\bar{3}1,$ $4\bar{2}\bar{2}0$	0.168	54.6
003	0.163	56.5	$3\bar{4}10,01\bar{1}2$	0.162	56.8
310	0.155	59.8	$2\bar{1}12,4\bar{2}\bar{2}1$	0.150	61.9
311	0.147	63.1	$02\bar{2}2,4\bar{4}00$	0.146	63.8

FIGURE CAPTIONS

Fig. 1. Section through chemically-thinned plan-view TEM specimen.

Fig. 2. Preparation of cross-sectional TEM specimens (a) strips are cleaved, (b) bonded face-to-face with epoxy, (c) mechanically thinned to 40-100 μm and (d) ion-thinned to perforation. Specimen support grid omitted for clarity. Backing pieces are added in step (b) for mechanical stability.

Fig. 3(a). Diagram of (100) wafer of zincblende semiconductor showing most useful viewing directions for cross-sectional TEM specimens. Also shown are projected atom positions in (b) $[01\bar{1}]$, (c) [010] and (d) [011] orientations. Distance between adjacent anion and cation columns in [010] projection is ~ 0.2 nm.

Fig. 4. Cross-sectional TEM image of Ni patch which remains unreacted after annealing 44 nm Ni on GaAs for 10' min. at 220°C. Native oxide/hydrocarbon layer appears as light band.

Fig. 5. Summary of measurements from Fig. 4 and similar images.

Fig. 6. Energy dispersive x-ray spectrum from plan-view Ni/GaAs sample after annealing at 315°C for 10 min.

Fig. 7. Rutherford backscattering spectra and simulation from sample imaged in Fig. 4.

Fig. 8(a). Plan-view image of Cu_2S film formed by immersion of (0001)A CdS into CuCl (aq.) at 99°C for 5 sec. CdS substrate has been etched away. Note thick penetrations of Cu_2S near cracks. (b) Corresponding diffraction pattern. Diffraction spots from the tetragonal phase are arrowed. Note that most tetragonal phase spots overlap with diffraction spots from low chalcocite.

Fig. 9. Cross-sectional TEM image of specimen imaged in Fig. 8(a). First layer to form was thin skin of low chalcocite (lch) in $[6\bar{4}3]$ zone-axis orientation. Tetragonal phase (tet) is imaged in [010] zone-axis orientation. Deep penetration of low chalcocite near crack (see Fig. 8(a)) is in [010] zone-axis orientation. Note that tet-CdS interface is parallel to CdS basal plane (horizontal), whereas lch-CdS interface is steeply inclined. CdS is in $[\bar{2}110]$ zone-axis orientation.

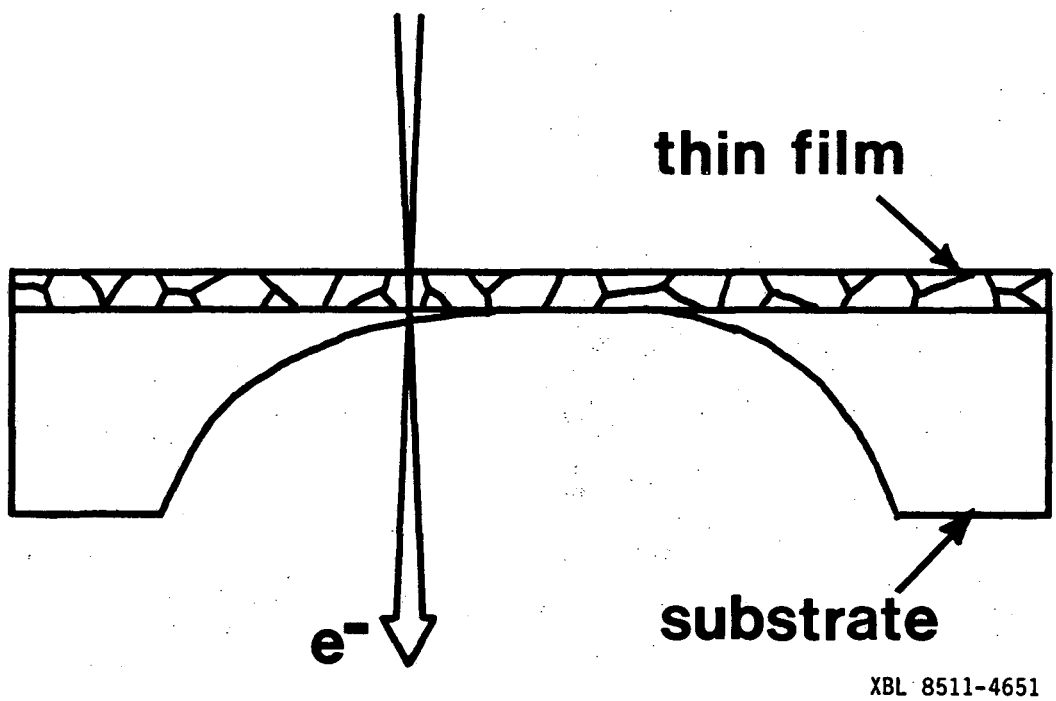

Fig. 1

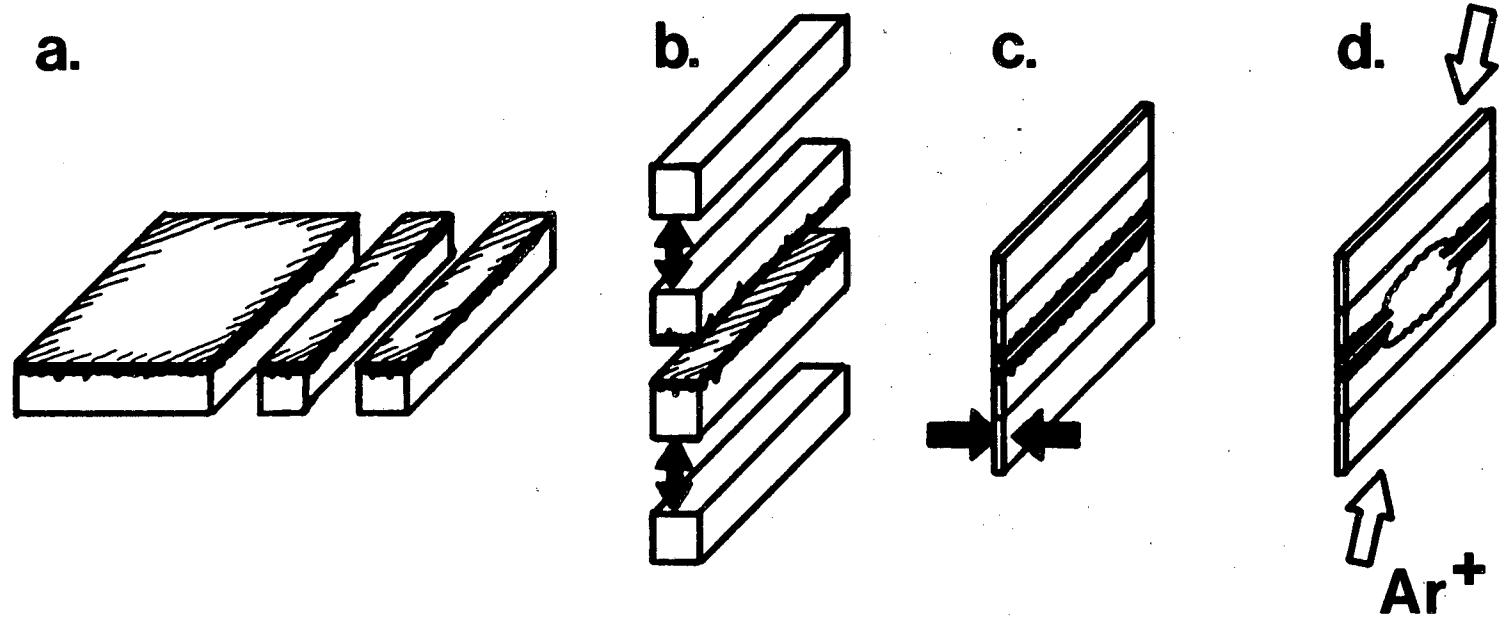

XBL 8511-4652

Fig. 2

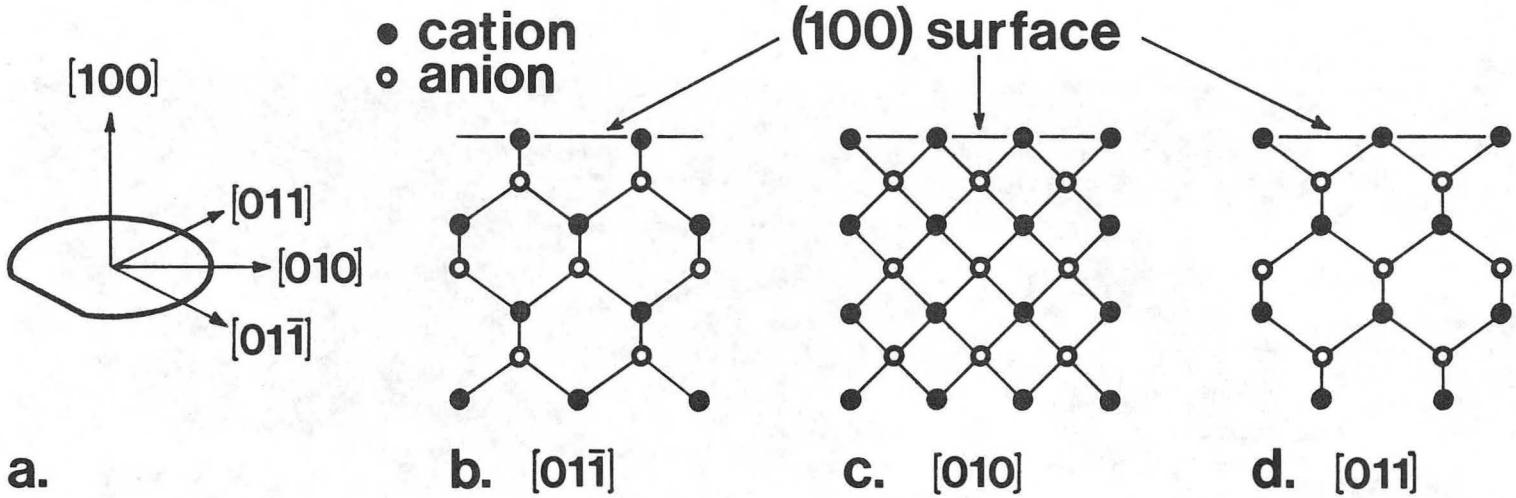

XBL 8511-4653

Fig. 3

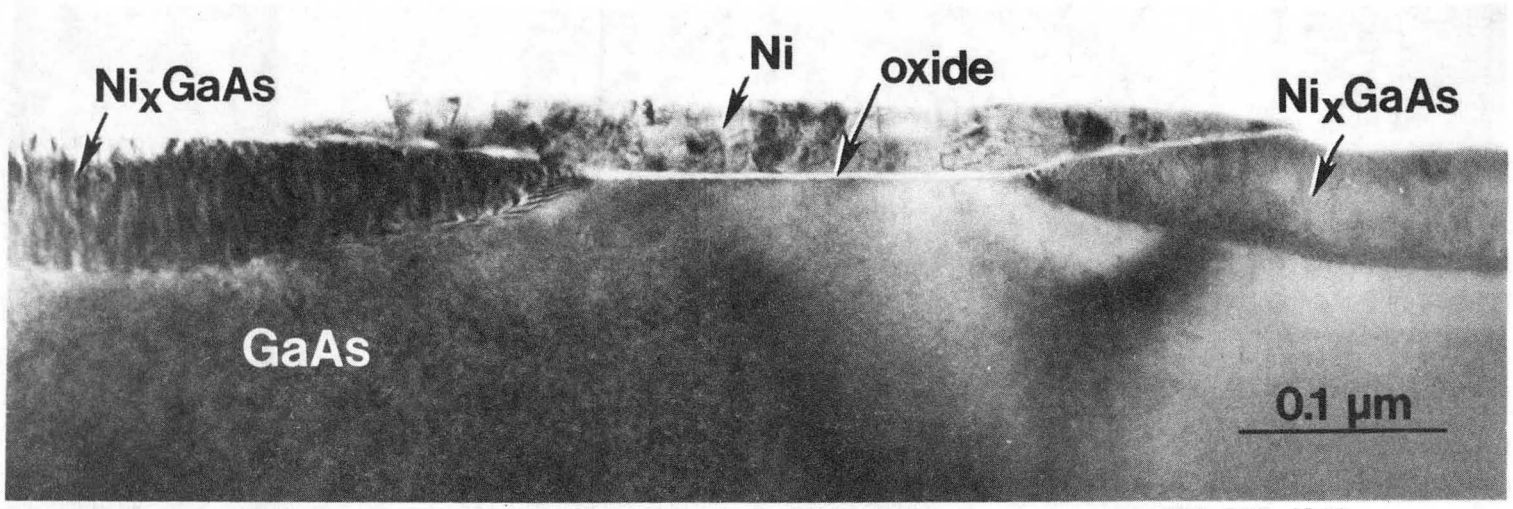

XBB 855-4168

Fig. 4

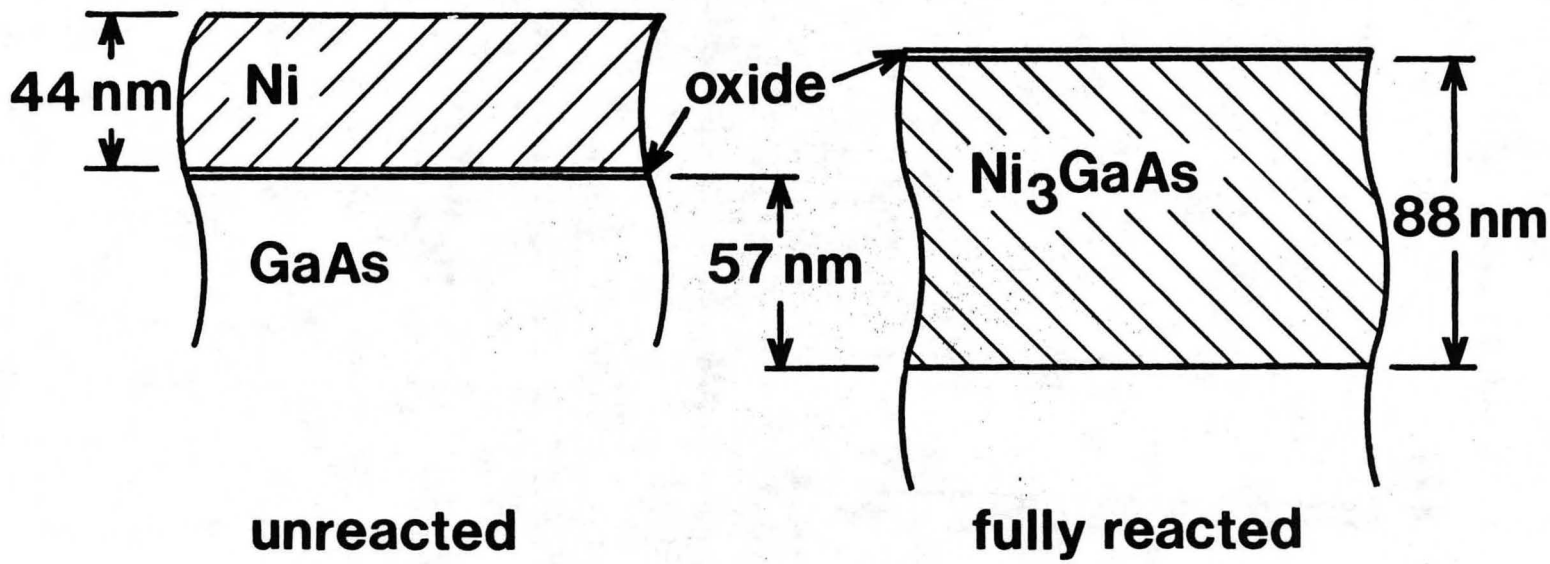

XBL 8511-4654

Fig. 5

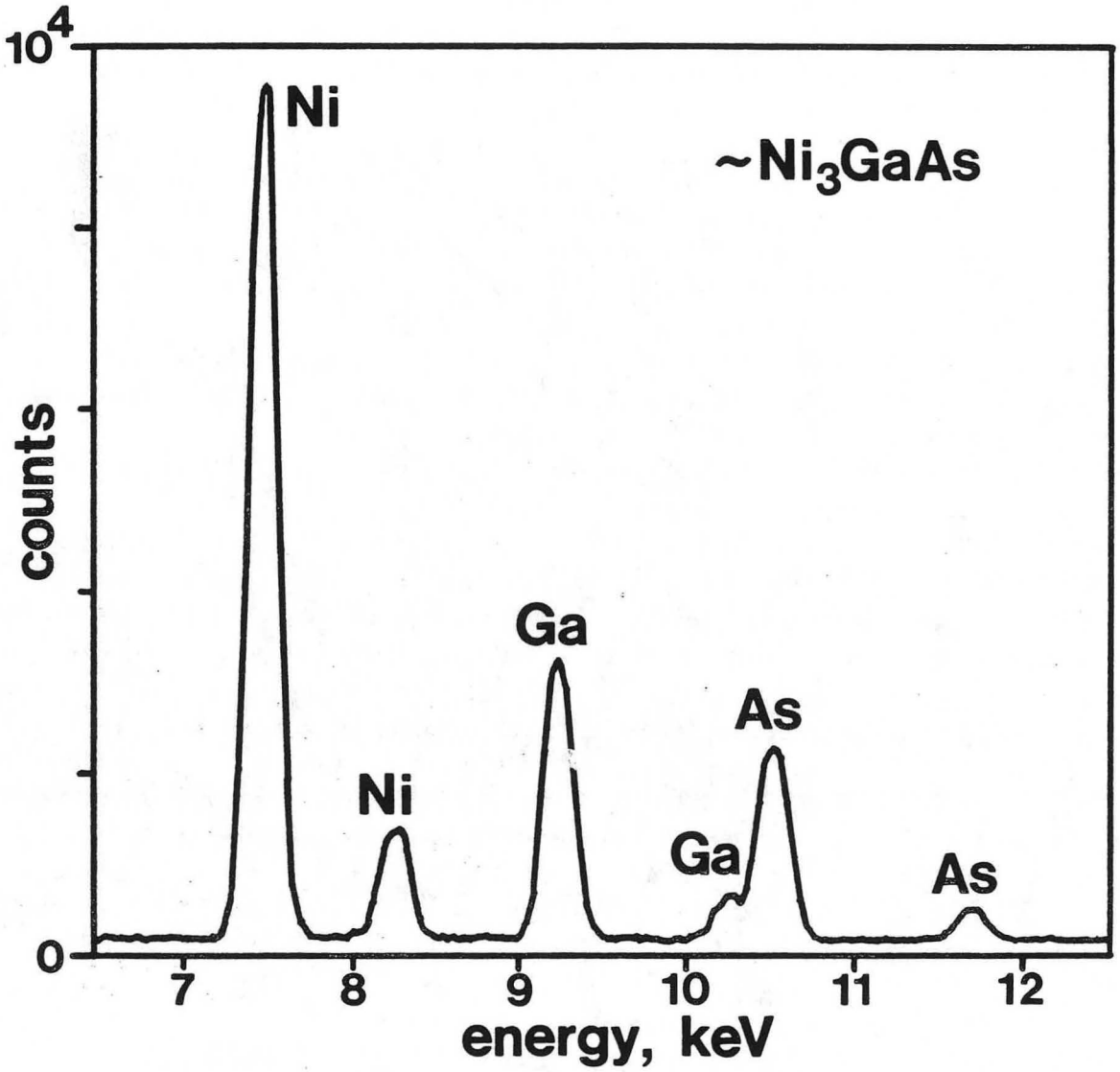

XBL 858-3750

Fig. 6

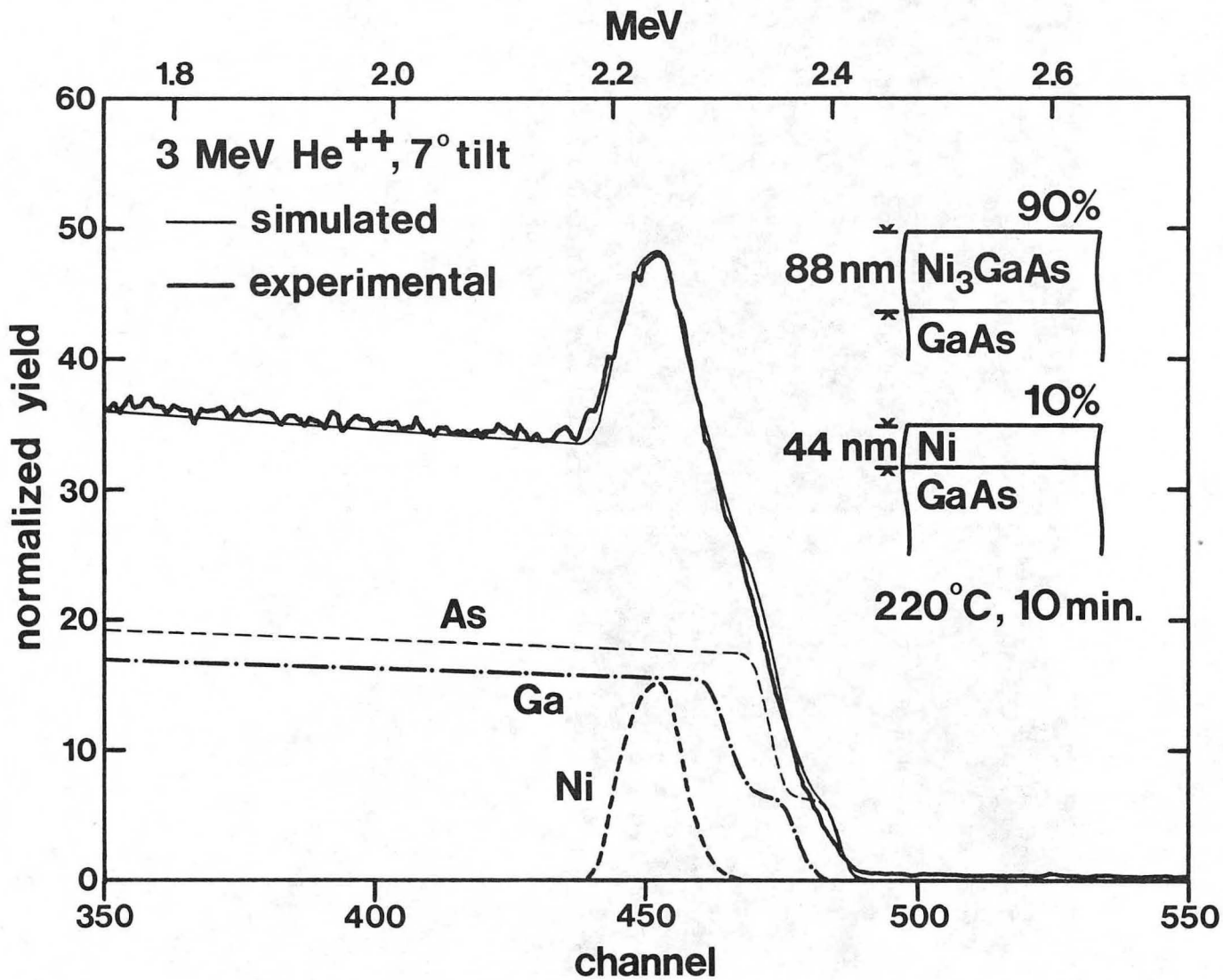

XBL 859-3986

Fig. 7

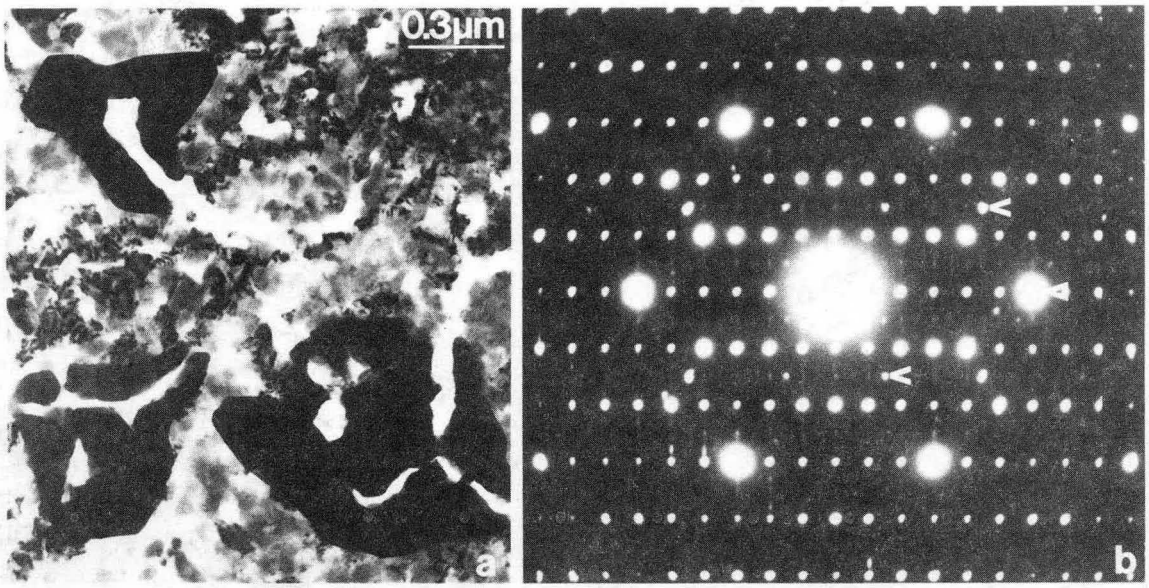

XBB 850-9336

Fig. 8

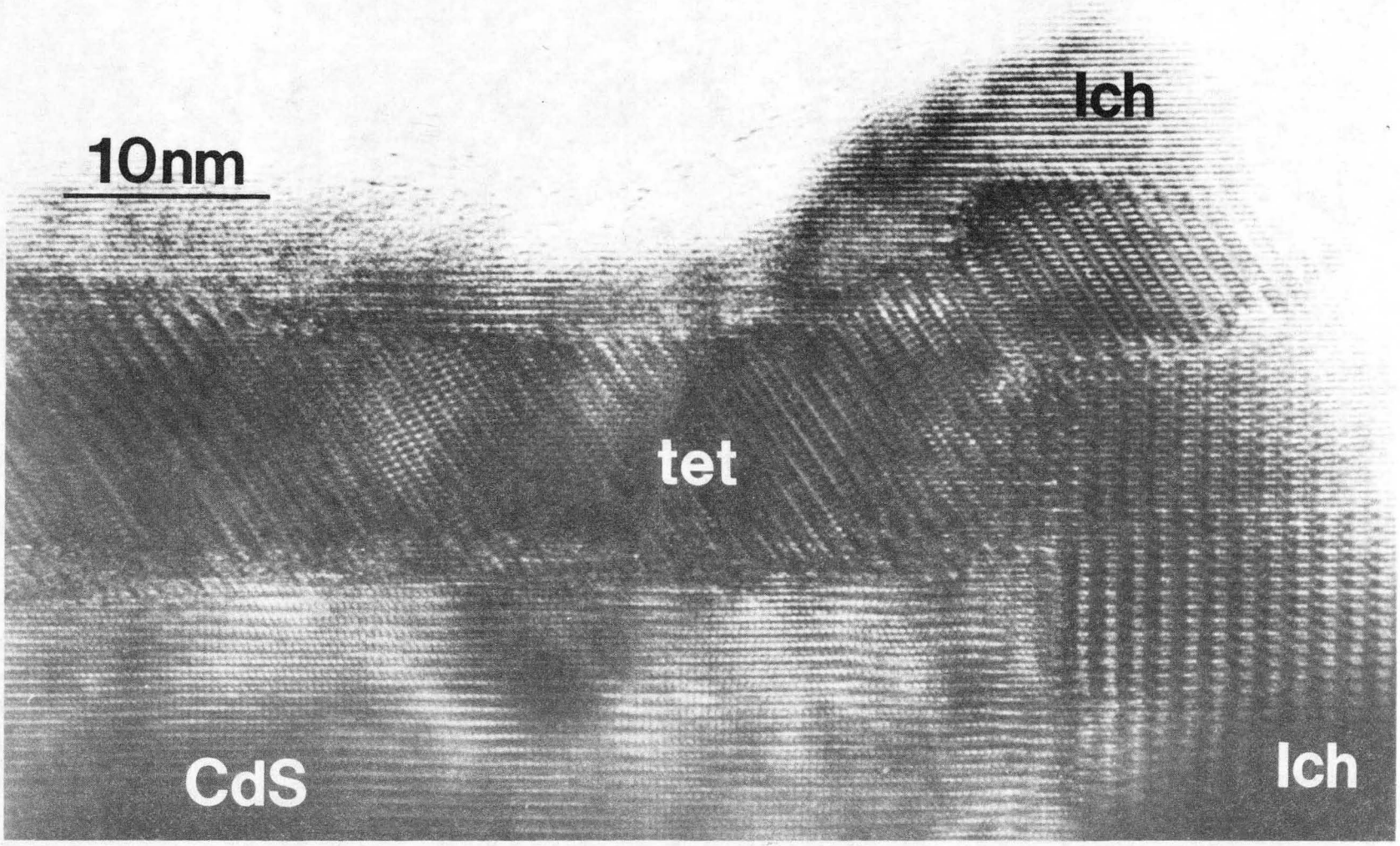

Fig. 9

XBB 830-10048

This report was done with support from the Department of Energy. Any conclusions or opinions expressed in this report represent solely those of the author(s) and not necessarily those of The Regents of the University of California, the Lawrence Berkeley Laboratory or the Department of Energy.

Reference to a company or product name does not imply approval or recommendation of the product by the University of California or the U.S. Department of Energy to the exclusion of others that may be suitable.

LAWRENCE BERKELEY LABORATORY
TECHNICAL INFORMATION DEPARTMENT
UNIVERSITY OF CALIFORNIA
BERKELEY, CALIFORNIA 94720