Submitted to
Physical Review

LBL-2072
Preprint c.1

EXPERIMENTAL CONSEQUENCES OF OBJECTIVE LOCAL THEORIES I

John F. Clauser and Michael A. Horne

August 1973

Prepared for the U. S. Atomic Energy Commission
under Contract W-7405-ENG-48

For Reference

Not to be taken from this room

LAWRENCE BERKELEY LABORATORY
UNIVERSITY OF CALIFORNIA
BERKELEY

LBL-2072
c.1

DISCLAIMER

This document was prepared as an account of work sponsored by the United States Government. While this document is believed to contain correct information, neither the United States Government nor any agency thereof, nor the Regents of the University of California, nor any of their employees, makes any warranty, express or implied, or assumes any legal responsibility for the accuracy, completeness, or usefulness of any information, apparatus, product, or process disclosed, or represents that its use would not infringe privately owned rights. Reference herein to any specific commercial product, process, or service by its trade name, trademark, manufacturer, or otherwise, does not necessarily constitute or imply its endorsement, recommendation, or favoring by the United States Government or any agency thereof, or the Regents of the University of California. The views and opinions of authors expressed herein do not necessarily state or reflect those of the United States Government or any agency thereof or the Regents of the University of California.

LBL-2072

EXPERIMENTAL CONSEQUENCES OF OBJECTIVE LOCAL THEORIES I*

John F. Clauser

Department of Physics and Lawrence Berkeley Laboratory

University of California

Berkeley, California 84720

and

Michael A. Horne

Department of Physics

Stonehill College

N. Easton, Mass., 02356

ABSTRACT

Objective local theories of reality are defined, and shown to lead to predictions which are distinctly different from the predictions by quantum mechanics. Experiments may thus be performed which will either disprove the predictions by quantum mechanics in at least one application, or show that nature cannot be viewed as both objective and consistent with macrocausality. The experimental requirements are presented. The demonstration is done through a generalization of analyses by Bell, Clauser, Horne, Shimony, and Holt. The present analysis will be based solely on the phenomenology of correlation experiments, and thus will constrain the most general theories of this type.

INTRODUCTION

The old classical atomic theories described objective deterministic systems. The advent of quantum mechanics introduced (among other things) stochastic elements into the description, presumably as an inherent attribute of nature. Opponents of this interpretation proposed that all of the statistical predictions by quantum mechanics could be deduced from a broader deterministic theory, in which the observed stochastic features emerge as the result of unknown random initial conditions. Such a covering theory is generally called a hidden-variable theory. Bell has recently considered such theories in conjunction with a "locality" or "macrocausality" requirement.[1] This requirement (reasonable for any viable theory) denies the possibility of propagating signals for macroscopic distances faster than the speed of light. He showed that no local hidden-variable theory can reproduce all of the statistical predictions by quantum mechanics. Extensions of this result to realizable systems by Clauser, Horne, Shimony, and Holt [2] have led to experimental tests of the hidden-variable proposal.[3]

A related, but more general question concerns the objectivity of the systems described by quantum mechanics. One naturally assumes that a physical measurement measures the properties of an objective physical system, or object. It is tacitly assumed that measurable objects have at least some objective properties or real physical conditions which exist independently of their being observed. For example, an atom, prepared in a pure state, has characteristic

properties which it is known will be the results of certain measurements performed upon it. These are the objective properties of this object. For classical objects, e.g. rocks, trees, etc., it seems hard to dispute that these have characteristic properties. Since objects evidently have some spatial extent, it is undoubtedly more precise to consider all of the objects (including measuring apparatuses), or better yet, all of the real physical conditions or properties within a given spatial region; and indeed to assume that the totality of all properties within this region exist. Thus we assume that a given region of space and time is characterized by properties intrinsic to that region.

If one takes at all seriously the word "measurement," these properties must influence, at least to some extent, the results of measurements occurring there. On the other hand, they perhaps will not fully determine the results. To be sure, the dependence upon these may be partially random, since the evolution from the specification of the properties until the result is finalized may be an inherently stochastic feature of nature. To compare various systems, we must then specify the properties at some characteristic point in time. If one does so, and takes a large enough ensemble of regions with identical natural properties at that time, these properties must determine at least the probabilities (fraction among the numbers of the ensemble) of the various eventual outcomes. Deterministic theories form a limiting case in which these probabilities are always zero or one. Since it is clearly meaningless to ask

whether conditions in the future uniquely evolve from those at the present when the conditions at the present are not definable, deterministic theories form a subclass of the more general objective theories.

The locality requirement mentioned above will deny the influence of the results of measurements performed within the region by properties which are defined only outside of the backward light cone of the region at the time of the measurement event. In summary, then, we define an objective local theory (OLT) as one constrained by the following two postulates:

I. Signals cannot propagate macroscopic distances faster than the speed of light, and so doing, influence any experimental outcome (macrocausality - locality assumption).

II. The mathematical probabilities for various experimental results observed in some spatial region at a given time are determined by quantities (objective properties) existing independently of a local observer, that are characteristic of the backward light cone of this region. Deterministic (hidden-variable) theories form a limiting case in which these probabilities are always zero or one (objectivity assumption).[4]

These postulates, although reasonable in everyday terms, diverge from the normal quantum mechanical postulates. It is worthwhile to ask whether quantum machanics can subsist within their framework. It cannot! Thus, it is the purpose of this paper to show that

suitable experiments may be performed which will either disprove the predictions by quantum mechanics in at least one application, or show that nature cannot be viewed as both objective and consistent with macrocausality. We will use here observable phenomenology, but no assumptions additional to the above. The results follow as an extension of the applicability, formalism, and interpretation of Bell's result for local hidden-variable theories.[5]

The paper consists of two parts. In part I we first review the simple phenomenology of Bohm's Gedankenexperiment, since arrangements of this type form the backbone of our analysis.[6] We then present in turn the predictions by our objectivity and locality assumptions, and by quantum mechanics. We find a direct incompatibility of these for realizable cases of Bohm's Gedankenexperiment and similar schemes, over a range of experimental parameters. We end this part with a discussion of the requirements for an experimental test and the implications of such a test. Part II concerns itself with the experimental status of these results.[7] We have mentioned that earlier extensions of Bell's theorem have been recently tested experimentally. We discuss there the relationship of that experiment to the above proposed test. Also there we explore the limits of that data's applicability to the first question about determinism, and the additional information which the proposed test will bring to bear on this question.

PHENOMENOLOGY OF BOHM'S GEDANKENEXPERIMENT

Figure 1 shows schematically a Gedankenexperiment proposed by Bohm[6] as an example of the Einstein-Podolsky-Rosen paradox. In it an unstable molecule with total spin equal to zero (or one) dissociates into a pair of spin-1/2 atoms. Some of the pairs enter a respective pair of apparatuses. Each apparatus consists of a Stern-Gerlach analyzer, followed by a detector. The analyzers may be oriented along directions $\underset{\sim}{a}$ and $\underset{\sim}{b}$ by the experimenter or experimenters. Particles with their spin along $\underset{\sim}{a}(\underset{\sim}{b})$ are detected; those with spin opposed to $\underset{\sim}{a}(\underset{\sim}{b})$ are ignored.[8]

A typical record of the detector outputs is depicted in Fig. 2. It consists of a random train of voltage pulses. The pulse rates and their correlation will in general depend upon the orientations $\underset{\sim}{a}$ and $\underset{\sim}{b}$, but the rate of molecular dissociations will be specified to be constant. Thus count rates (or probabilities per unit time) may be measured as a function of the detector orientations only.

Frequently, the detector at apparatus A will count simultaneously, or nearly so, with that of apparatus B. The joint event is commonly called a coincidence. The definition of a coincidence, however, is ambiguous and nonlocal. In order to refrain from specifying an internal model giving rise to the correlations at A and B (e.g. correlated "particle" emission), and to set the stage for what follows, we shall provide a more careful definition of the term.

We equip each apparatus with a clock producing time intervals of total length τ. The two clocks have been synchronized beforehand. Each time interval (t_i, t_{i+1}) we divide into three subintervals of length τ_1, τ_2, and τ_3, such that $\tau_1 + \tau_2 + \tau_3 = \tau$, as shown in Figure 2. During the first subinterval τ_1, each analyzer is readjusted[9] to some orientation, selected perhaps at random by the experimenter, and supplied to the apparatus at time $t_i + \varepsilon$, with $0 < \varepsilon < \tau_1$. The second subinterval τ_2 is inserted so that the adjustment can have sufficient time to effect the experimental result. In the example of Bohm's Gedankenexperiment, the spin 1/2 particles will traverse the Stern-Gerlach magnets and be deflected into or away from the detector during this period. Finally at each detector if the leading edge of an output pulse occurs during the final subinterval τ_3, the experimenter locally records the value +1 for the time interval (t_i, t_{i+1}), along with the associated analyzer orientation $\underset{\sim}{a}$. If no such voltage excursion occurs in this interval, he instead records the current value of $\underset{\sim}{a}$ and the result zero for that interval. Either detector output in each interval of time is thus constrained to be in one of the two final states[8]: +1 or 0. This procedure will then convert these detector records to the square pulses shown in Fig.2.

It should be noted in passing that the experimenter's role here is twofold. He must observe and record (perhaps using

automatic equipment) the various experimental outcomes. Second, he must generate signals to control the analyzer orientations. Since we have two apparatuses which may have an arbitrarily large separation, two experimenters (or equivalently, reliable mechanical or electronic surrogates) are needed to operate them. These experimenters when acting as signal sources, may select at random the parameters $\underset{\sim}{a}$ and $\underset{\sim}{b}$ for each interval from among the set of possible orientations $\{\underset{\sim}{a}_j\}$ and $\{\underset{\sim}{b}_j\}$. These orientations are also recorded together with the associated experiment result. If they are not, the introduced randomness will obscure the correlation between the A and B results. This recording assures that one can correctly measure probabilities conditioned by the appropriate parameter pair settings.

Consider now the data accumulated over many time intervals during which a large number of +1 events have occurred for each of the various interesting pairs of analyzer orientations. We group together the data for all of the intervals taken with like parameter pair settings. Denote by $N(\underset{\sim}{a},\underset{\sim}{b})$ the number of time intervals that the apparatus was set at the orientation pair $\underset{\sim}{a}$, $\underset{\sim}{b}$. For this (and for every other) pair we tally the four possible coincidence combinations. Thus $N_{++}(\underset{\sim}{a},\underset{\sim}{b})$ is the total number of time intervals during which the apparatus was oriented to direction $\underset{\sim}{a}$ and $\underset{\sim}{b}$, <u>and</u> the results A = +1 and B = +1 occurred; etc. We now define the "overlap coincidence rate" as

$$R(\underset{\sim}{a},\underset{\sim}{b}) = N_{++}(\underset{\sim}{a},\underset{\sim}{b})/[N(\underset{\sim}{a},\underset{\sim}{b})\tau]. \qquad (1)$$

Correspondingly we define the "singles rates" as

$$r_A(\underset{\sim}{a},x) = [N_{++}(\underset{\sim}{a},x)+N_{+0}(\underset{\sim}{a},x)]/[N(\underset{\sim}{a},x)\tau] \qquad (2)$$

and

$$r_B(x,\underset{\sim}{b}) = [N_{++}(x,\underset{\sim}{b})+N_{0+}(x,\underset{\sim}{b})]/[N(x,\underset{\sim}{b})\tau] \qquad (3)$$

with

$$N(\underset{\sim}{a},\underset{\sim}{b})=N_{++}(\underset{\sim}{a},\underset{\sim}{b})+N_{+0}(\underset{\sim}{a},\underset{\sim}{b})+N_{0+}(\underset{\sim}{a},\underset{\sim}{b})+N_{00}(\underset{\sim}{a},\underset{\sim}{b}) \qquad (4)$$

One argument, x, remains unspecified in each singles rate since locality will deny a dependence of this rate at one detector upon the orientation of the distant apparatus.

With definitions (1) - (4), for negligible jitter in the experiment timing, we recover the usual measures of singles and coincidence rates. We recall of course that these measure probabilities conditioned by the apparatus parameter settings. Our procedure assures us that there are no tacit nonlocal assumptions manifest in this definition.

EXPERIMENTAL CONSEQUENCES OF OBJECTIVE LOCAL THEORIES

We now derive model-independent predictions from the simultaneous assumption of locality and objectivity which are experimentally testable. If these predictions are violated by experiment, then either objectivity or locality (or both) does not hold. Implicit in our locality requirement is a presumed existence of sources of

space-time localized signals, so that such signals may be generated independently of the objective world around the source. In other words, sources with "free will" must exist, for locality to have any meaning.[10] Such signals presumably can then exist which are observed to be localized in space-time regions outside of the light-cone of the measurement region. Any influence by these signals on an individual measurement result is a violation of the locality requirement. Thus the locality restriction is much more severe for individual objective systems than it is for an ensemble of nonobjective systems. Locality, in the latter case, simply denies the influence of nonlocal signals upon an ensemble average of experiment results. For objective systems, however, every individual measurement result must not be influenced by the signal, nor must any ensemble average of these. It is possible that individual measurement results violate the locality restriction, but that an ensemble of these appears not to, because the absence of determinism masks this effect. We shall see that in the quantum mechanical case, the masking is incomplete.

To explore the consequences of OLT's, we consider schemes like Bohm's Gedankenexperiment. The timing, control of adjustable apparatus paramenters, and data output are to follow the above prescribed sequence. For full generality, however, we simply identify each apparatus (Stern-Gerlach analyzer and associated detector) as a black box. We surround each black box and the

associated signal source for apparatus parameters with an imaginary surface, Σ_A or Σ_B, respectively; such that every point on the surface has a separation from any point on the associated signal source and box greater than $c\tau$ (see Fig. 3). Our postulates imply that a result at t_{i+1} may be influenced only by the properties of nature which are contained within the backward lightcone of the associated box and source at that time. Equivalently, the i-th result recorded at the time t_{i+1} at a given apparatus, A for example, is influenced only by the properties of nature which are physically located within the surface Σ_A at time t_i.

We denote by the symbols λ_A and λ_B the set of natural properties contained within the surfaces Σ_A and Σ_B, respectively, at time t_i. Thus, λ_A fully specifies the "objective state" or "ultimate essence" of nature within the surface Σ_A at that time. Although λ_A, λ_B, $\underset{\sim}{a}$ and $\underset{\sim}{b}$ are denoted by single symbols they are fully general quantities, which may have any form and desired degree of complexity (it is not necessary that $\underset{\sim}{a}$ and $\underset{\sim}{b}$ specify a vector orientation of an analyzer). One exception we shall make to the all-inclusiveness of λ_A and λ_B is the state of the "free willed" signal source, since by our hypothesis the objective properties of nature exist independently of the observer, and conceivable sources include the observers' actual decisions.

We separate the two apparatuses sufficiently far that the surfaces Σ_A and Σ_B do not intersect. In an ensemble of such pairs of

apparatuses, any correlation between the paired results must arise somehow through a correlation of λ_A and λ_B. That is, the real physical properties of the two disjoint regions of space-time must somehow be correlated. Among the members of this ensemble (equivalently we may consider a sequence of such measurements, assuming the random processes to be ergodic[11]) there will be a random distribution of these various natural properties λ_A and λ_B. The signal sources do not define the apparatus parameters $\underset{\sim}{a}$ and $\underset{\sim}{b}$ until a time $t_i + \varepsilon$. Hence it is impossible for λ_A and λ_B, defined at an earlier time t_i, to be dependent upon quantities $\underset{\sim}{a}$ and $\underset{\sim}{b}$ which are not yet defined. Conversely, our objectivity postulate allows the generation of $\underset{\sim}{a}$ and $\underset{\sim}{b}$ to be independent of λ_A and λ_B. Thus we write a probability density $\rho(\lambda_A,\lambda_B)$, describing the distribution of λ_A and λ_B among the members of the ensemble, being justified in introducing it as independent of $\underset{\sim}{a}$ and $\underset{\sim}{b}$. We leave open the specific form of ρ so that the most general allowable correlation may be specified.

Since we have defined the quantities λ_A and λ_B at time t_i, but do not complete our measurements until the time t_{i+1}, the states inside the black boxes will evolve during the interim. Locality requires that the evolution proceed independently of anything outside of the corresponding surface. Up until time $t_i+\varepsilon$, the evolution may depend upon the local λ's themselves. At that time the apparatus parameters are defined and supplied to the black boxes. The evolution will then depend upon these also, and they will become a part of the local objective properties of nature. Thus the final outcome at box A, for example, can depend only upon the two quantities λ_A and $\underset{\sim}{a}$.

Randomness has entered through the unknown initial conditions, specified by the function ρ. We should also allow for situations in which probability enters in a deeper and more fundamental way, since the evolution of physical systems may be inherently stochastic. Inside one surface, for example Σ_A, in a large ensemble of cases with identical initial conditions λ_A and signal inputs $\underset{\sim}{a}$, both the +1 and 0 outcomes may occur. Denote the fraction of +1 outcomes in this ensemble by the symbol $p(\underset{\sim}{a},\lambda_A)$. Our postulates imply that λ_A and $\underset{\sim}{a}$ determine this number, if the ensemble is sufficiently large. Correspondingly there is a probability $p_B(\underset{\sim}{b},\lambda_B)$ defined at the surface Σ_B. Because these are sensible probabilities, we must have

$$\begin{aligned} 0 &\leq p_A(\underset{\sim}{a},\lambda_A) \leq 1, \\ 0 &\leq p_B(\underset{\sim}{b},\lambda_B) \leq 1. \end{aligned} \tag{5}$$

These probabilities are determined by $\underset{\sim}{a}$, $\underset{\sim}{b}$, λ_A, and λ_B, thus for a given set of these, the fraction p_B cannot then depend upon any chosen subensemble of associated A outcomes, and vice versa. If p_B and p_B are dependent, then a subensemble of B outcomes associated with certain subensembles of A outcomes will have a fraction of +1 results different from p_B. This subensemble is an equally valid ensemble for the definition of p_B. Sc contrary to our hypothesis, this fraction is not then uniquely specified by $\underset{\sim}{b}$ and λ_B. Therefore the probabilities p_A and p_B must be independent. This independence implies that for fixed $\underset{\sim}{a}$, $\underset{\sim}{b}$, λ_A, and λ_B, we can write the probability (of the second type) that both detectors will record +1, simply as the product $w = p_A(\underset{\sim}{a},\lambda_A)p_B(\underset{\sim}{b},\lambda_B)$.

Any correlation, we recall, enters via a correlation of λ_A and λ_B. We thus calculate the fraction of the times that

both apparatuses record the +1 result by averaging w over the entire sample space of λ_A and λ_B. This probability is then

$$W[A(\underset{\sim}{a})+,\ B(\underset{\sim}{b})+] \equiv W(\underset{\sim}{a},\underset{\sim}{b}) = \int p_A(\underset{\sim}{a},\lambda_A)p_B(\underset{\sim}{b},\lambda_B)\rho(\lambda_A,\lambda_B)d\lambda_A d\lambda_B \qquad (6)$$

In similar fashion the probability that the apparatus A will record +1, irrelevantly of B's result is

$$w_A(\underset{\sim}{a}) = \iint p_A(\underset{\sim}{a},\lambda_A)\rho(\lambda_A,\lambda_B)\ d\lambda_A d\lambda_B. \qquad (7)$$

Likewise for apparatus B we have

$$w_B(\underset{\sim}{b}) = \iint p_B(\underset{\sim}{b},\ \lambda_B)\rho(\lambda_A,\lambda_B)\ d\lambda_A d\lambda_B. \qquad (8)$$

Let us now be more specific about the experimenter's choice for the apparatus parameters. Consider the case in which only two different apparatus parameters are chosen for each apparatus. Thus the A apparatus parameter will be set at either $\underset{\sim}{a}$ or $\underset{\sim}{a}'$, and the B parameter at either $\underset{\sim}{b}$ or $\underset{\sim}{b}'$. The above physical arguments allow us to define the four probabilities $p_A(\underset{\sim}{a},\lambda_A)$, $p_A(\underset{\sim}{a}',\ \lambda_A)$, $p_B(\underset{\sim}{b},\lambda_B)$, and $p_B(\underset{\sim}{b}',\lambda_B)$ associated with the objective properties inside the surfaces Σ_A and Σ_B.

The remainder of the demonstration is purely mathematical. We use a theorem, proved in the appendix which states: Given any six numbers x_1, x_2, y_1, y_2, X, and Y such that the inequalities

$$0 \leq x_1 \leq X,\ 0 \leq x_2 \leq X,\ 0 \leq y_1 \leq Y,\ \ 0 \leq y_2 \leq Y \qquad (A1.1)$$

hold, then the following inequality also holds;

$$- XY \leq x_1 y_1 - x_1 y_2 + x_2 y_1 + x_2 y_2 - Y x_2 - X y_1 \leq 0. \qquad \text{(A1.2)}$$

We now take

$$X = Y = 1,\ x_1 = p_A(\underset{\sim}{a},\lambda_A), x_2 = p_A(\underset{\sim}{a}'\lambda_A), y_1 = p_B(\underset{\sim}{b},\lambda_B), y_2 = p_B(\underset{\sim}{b}'\lambda_B),$$

and find that inequalities (5) reduce to the required inequalities (A1.1). The theorem thus imposes the following constraint upon these probabilities:

$$-1 \leq p_A(\underset{\sim}{a},\lambda_A)p_B(\underset{\sim}{b},\lambda_B) - p_A(\underset{\sim}{a},\lambda_A)p_B(\underset{\sim}{b}',\lambda_B) + p_A(\underset{\sim}{a}',\lambda_A)p_B(\underset{\sim}{b},\lambda_B)$$
$$+ p_A(\underset{\sim}{a}',\lambda_A)p_B(\underset{\sim}{b}',\lambda_B) - p_A(\underset{\sim}{a}',\lambda_A) - p_B(\underset{\sim}{b},\lambda_B) \leq 0. \qquad (9)$$

Multiplying Ineq. (9) by $\rho(\lambda_A, \lambda_B)$, integrating it over the full domains of λ_A and λ_B, and using Eqs. (6) - (8), we get

$$-1 \leq W(\underset{\sim}{a},\underset{\sim}{b}) - W(\underset{\sim}{a},\underset{\sim}{b}') + W(\underset{\sim}{a}',\underset{\sim}{b}) + W(\underset{\sim}{a}',\underset{\sim}{b}') - w_A(\underset{\sim}{a}') - w_B(\underset{\sim}{b}) \leq 0, \qquad (10)$$

which will hold for each interval of time. Dividing by τ, we find that the following inequality contrains observable overlap coincidence rates, defined by Eqs. (1) - (4) for our ensemble:

$$- \tau^{-1} \leq R(\underset{\sim}{a},\underset{\sim}{b}) - R(\underset{\sim}{a},\underset{\sim}{b}') + R(\underset{\sim}{a}',\underset{\sim}{b}) + R(\underset{\sim}{a}',\underset{\sim}{b}') - r_A(\underset{\sim}{a}') - r_B(\underset{\sim}{b}) \leq 0. \qquad (11)$$

Thus we have succeeded in casting the assumptions I and II into the form of a perfectly general inequality which contrains observable rates, using only the observable phenomenology of Bohm's Gedankenexperiment, but no assumption of determinism, nor of any specific internal model. Inequality (11) thus contrains any and

all objective, local, theories of nature. In many relevant experiments such as Bohm's Gedankenexperiment, $\underset{\sim}{a}$ and $\underset{\sim}{b}$ may be taken as scalar parameters a and b, such as the angles between the analyzer orientations planes and some common reference plane including the flight axis. If experimentally (and as predicted by quantum mechanics) the rates r_A and r_B are found to be independent of a and b, and the rate R found to depend only upon the angle between the analyzer orientations ϕ, then this inequality can be written in the more convenient form

$$-\tau^{-1} \leq 3R(\phi) - R(3\phi) - r_A - r_B \leq 0, \qquad (12)$$

where we have chosen $b-a = c-b = d-c = \emptyset$.

QUANTUM MECHANICAL PREDICTIONS AND INCOMPATIBILITY

For a contrast with the predictions by objective local theories, we now present the predictions by quantum mechanics for Bohm's Gedankenexperiment. For each apparatus two efficiencies may be measured for a controlled flux of particles entering the collimator: ξ^i_M and ξ^i_m are the response probabilities for a particle entering collimator i, initially polarized parallel and antiparallel respectively to the analyzer orientation. We rewrite these in the following forms: $\xi^i_+ \equiv \xi^i_M + \xi^i_m$ and $\xi^i_- \equiv \xi^i_M - \xi^i_m$. The quantum mechanical prediction for the coincidence rate is then[12]

$$R(a,b) = \tfrac{1}{4} R_p \zeta \, [\xi^A_+ \, \xi^B_+ + F \, \xi^A_- \, \xi^B_- \cos(a-b)] + R_a, \qquad (13)$$

where F is a parameter which depends upon the nature of the two-atom

initial state. For an initially pure singlet (S=0) state we have $F = -1$; for an initially pure M=0 triplet (S=1) state we have $F = +1$. Statistical mixtures of other states will give correlations, which when averaged over a + b will yield the same form with $|F| \leq 1$. The apparatus orientations $\underset{\sim}{a}$ and $\underset{\sim}{b}$ are both taken perpendicular to the experiment axis and are at angles a and b from some reference axis in their plane. Here, R_p is the rate at which correlated particles simultaneously enter both collimators (proportional to the dissociation rate). R_a is the unavoidable accidental rate which in a well designed experiment, presumably, can be made negligible. ζ is the efficiency by which our scheme recognizes coincidences. The singles rates with the above definitions similarly are given by

$$r_A = R_p \xi_+^A / (2\eta^B) + R_{dA}, \tag{14}$$

$$r_B = R_p \xi_+^B / (2\eta^A) + R_{dB}. \tag{15}$$

Here η^A and η^B are the "gathering" efficiencies for the collimators A and B; i.e. η^A is the probability that a particle will enter collimator A, given that an associated particle enters collimator B. The gathering efficiencies will depend upon the nature of the decay (e.g. two-body vs. three-body), the collimator geometry, and the center-of-mass momentum of the two particle system. R_{dA} and R_{dB} are the detector background count rates.

In principle, at least, the efficiencies can be made nearly ideal and the backgrounds negligible. In this limit we have

$\xi_M^i \to 1$, $\xi_m^i \to 0$, $\eta^i \to 1$ $R_d/R_p \to 0$, $R_a/R_p \to 0$, $\zeta \to 1$, and thus

$$R(a,b) \to \tfrac{1}{2} R_p \cos^2[(a-b)/2],$$
$$r_A, r_B \to R_p/2. \qquad (16)$$

We now contrast these predictions with Ineqs. (11) and (12), derived above, by evaluating the quantum mechanical prediction at the relative orientations shown in Fig.4. Assuming the nearly ideal experimental conditions Eq. (16), the central expression of Ineq. (11),

$$\tfrac{1}{2}R_p(\sqrt{2} - 1),$$

is positive, in clear violation of Ineq. (11) which requires it to be negative. Thus experiment must disprove the predictions by quantum mechanics, or prove that nature cannot be viewed as both objective and consistent with locality. If these predictions by quantum mechanics are correct, individual objective systems, if they exist, must violate locality even though average values for ensembles of them do not.

REQUIREMENTS FOR AN EXPERIMENTAL TEST

The orientations of Fig.4 were chosen to yield maximum violation. Conversely the minimum experimental requirement for observation of a violation of Ineq. (11) is obtained by direct substitution of the quantum mechanical predictions, Eqs. (13) - (15) at these angles, into Ineq. (12), and reversing the direction of the inequality. The

required condition is

$$\zeta\left[\xi_+^A\xi_+^B + \sqrt{2}\ \xi_-^A\,\xi_+^B\,F\right] + \frac{4R_a}{R_p} - \frac{\xi_+^A}{\eta^B} - \frac{\xi_+^B}{\eta^A} - \frac{2(R_{dA}+R_{dB})}{R_p} > 0 \qquad (17)$$

Inequality (17) shows that the required analyzer efficiency, gathering efficiency, degree of correlation, etc. are interrelated. In general, some parameters may deteriorate if others are improved. On the other hand, if all parameters are nearly ideal except one, that one must still have a certain absolute minimum quality in order for Ineq.(17) to be satisfied. This condition represents an experimental requirement that is difficult to meet. In part II we show that the existing experimental results of Freedman and Clauser[3] do not in fact do so. On the other hand, there seems to be no a priori reason why it cannot be achieved with current (or perhaps future) technology. For example, the γ rays produced by positronium annihilation achieve the required correlation, but polarizers with sufficient transmission and extinction for them are not available. Alkali metal atoms can be detected by hot-wire detectors coupled through mass spectrometers, and their polarization can be analyzed by modern Stern-Gerlach magnets, both processes with high efficiency. It may be difficult, however, to produce these in pairs with the requisite polarization correlation, angular correlation, and intensity. Nonetheless it is plausible that suitable systems can be found to satisfy all of these requirements, and that the above experiments can be performed. This question will be the subject of future work.

DISCUSSION

The present paper has addressed the question of whether or not the existing formalism of quantum mechanics can be recast or perhaps reinterpreted in a manner which restores the objectivity of nature. We have found that it is not possible to do so, consistent with locality (macrocausality), and without an observable change of the experimental predictions. That Bell's theorem in principle implies an incompatibility of objectivity and locality, with the quantum mechanical predictions for idealized experiments was qualitatively noted earlier by d'Espagnat.[14] The present quantitative argument shows that with no further assumptions, objectivity and locality are amenable to direct experimental test. Such data will then confirm or reject any realistic, micro-objective, or macro-objective natural philosophy. The reader is directed to d'Espagnat's thorough discussion of these latter topics.

In order to solve various difficulties encountered in an analysis of the measurement process, Jauch has recently introduced a new concept of state which is in many respects equivalent to ours.[15] He has noted with interest the similarity in the predictions for various examples of his scheme and the predictions by Bell's theorem. Our analysis shows that this similarity is by no means coincidental. It also clarifies many earlier misconceptions concerning nonlocal correlations.[16]

Postulates I & II include an enormously general class of theories. Physicists consistently attempt to model

microscopic and macroscopic phenomena. Any such models, if they are covariant and geometrically based are included by this scheme, and thus are inconsistent with the predictions by quantum mechanics. These include any conceptual model of a wave packet as a geometrical entity, whether or not it is synthesized from a set of covariant field modes. As long as the model includes a space-time description of the measurement process, it must be inconsistent with the usual predictive rules of quantum mechanics.

Perceptive readers will have immediately noticed that the quantum mechanical formalism, as expected, directly violates our assumptions. The wave function ψ may not be simply substituted for our variables λ_A and λ_B. In this case our postulate requires that the local probability p_A at detector A be determined then by ψ and $\underset{\sim}{a}$. Hence p_A may not depend upon the selection of any associated subensemble or event at the B apparatus, and as noted before, p_A and p_B will be independent. For fixed ψ, there is then no correlation between the A and B measurements, in violation of the quantum mechanical prediction. The only remaining way to give a correlation is to recognize that the state ψ is not pure, but a mixture. Most assuredly it cannot be a quantum mechanical mixture, as it was very early noted by Furry[17] that this will not give the desired prediction either.

Together then, objectivity and macrocausality are violated in Bohm's Gedankenexperiment by the quantum formalism. Immediately after the molecular dissociation occurs, each atom may not be individually described by a state vector, but must be described as an improper mixture.[18] Thus the spin description of an individual atom here has no objective properties. The composite state of the two atoms must be described together. When either particle of the pair is measured, the composite state vector collapses and the other particle gains objective properties corresponding to the orientation of the first apparatus. Hence the set of objective properties of the second particle is in fact modified by the first measurement in a manner which depends directly upon the orientation of the first apparatus. This is in violation of our assumptions I and II. It occurs even though the usual causality condition--the principle of local commutivity--is satisfied.[19] Thus an experimental test of macrocausality and the objectivity of nature is possible. Fortunately the requirements for such a test are perhaps within the limitations of current technology. Such tests are clearly of great importance, both philosophically, and physically, to explore further the range of validity of the quantum mechanical formalism.

APPENDIX

In this appendix we prove the following mathematical theorem: Given six numbers x_1, x_2, y_1, y_2, X, Y such that

$$0 \leq x_1 \leq X,\ 0 \leq x_2 \leq X,\ 0 \leq y_1 \leq Y,\ 0 \leq y_2 \leq Y, \qquad \text{(A1.1)}$$

then the function $U = x_1y_1 - x_1y_2 + x_2y_1 + x_2y_2 - Yx_2 - Xy_1$ is constrained by the inequality

$$-XY \leq U \leq 0. \qquad \text{(A1.2)}$$

We first establish the upper bound by considering two cases. First assume that $x_1 \leq x_2$ and rewrite

$$U = (x_1 - X)y_1 + (y_1 - Y)x_2 + (x_2 - x_1)y_2.$$

We have thus assumed the last term to be nonpositive. Inequalities (A1.1) require the first two terms likewise to be nonpositive, and the validity of the upper bound is demonstrated. Next assume the other alternative, i.e. that $x_1 > x_2$, and use this assumption to bound U, thus:

$$\begin{aligned} U &= x_1(y_1 - y_2) + (x_2 - X)y_1 + x_2(y_2 - Y) \\ &\leq x_1(y_1 - y_2) + (x_2 - X)y_1 + x_1(y_2 - Y) = \qquad \text{(A1.3)} \\ &(x_2 - X)y_1 + x_1(y_1 - Y). \end{aligned}$$

Inspection and application of Ineqs.(A1.1) show that both of the resulting terms are also nonpositive. Thus, the upper bound on U is established for all cases.

The proof of the lower bound follows from a consideration of three cases. First, assume $x_2 \geq x_1$. The validity of the lower bound is apparent by inspection when written in the form

$$U + XY = (X - x_2)(Y - y_1) + x_1 y_1 + (x_2 - x_1)y_2 , \qquad (A1.4)$$

since Ineq. (A1.1) requires all three terms to be nonnegative.

Similarly for the case $y_1 \geq y_2$, inspection reveals the correctness of the upper bound when written

$$U + XY = (X - x_2)(Y - y_1) + x_2 y_2 + x_1 (y_1 - y_2) \leq 0. \qquad (A1.5)$$

Finally, suppose neither of the two previous cases holds; that is $x_2 < x_1$ and $y_1 < y_2$. Then write

$$U + XY = (X - x_2)(Y - y_1) - (x_1 - x_2)(y_2 - y_1) + x_2 y_1 . \qquad (A1.6)$$

The sum of the first two terms is nonnegative since now $(X - x_2) \geq (x_1 - x_2) > 0$ and $(Y - y_1) \geq (y_2 - y_1) > 0$. Ineq. (A1.1) requires the final term to be also nonnegative, hence the final case is also verified, and the theorem is proved.

FOOTNOTE AND REFERENCES

*Work supported by U.S. Atomic Energy Commission

[1] J. S. Bell, Physics (N.Y.) 1, 195 (1964); J. S. Bell, in Foundations of Quantum Mechanics, Proceedings of the International School of Physics "Enrico Fermi", Course 49, edited by B. d'Espagnat (Academic Press, N.Y. 1971), p. 171.

[2] J. F. Clauser, M. A. Horne, A. Shimony, and R. A. Holt, Phys. Rev. Letters 23, 880 (1969); J. F. Clauser, Bull. Amer. Phys. Soc. 14, 578 (1969); A. Shimony, in Foundations of Quantum Mechanics, p. 182 (see Ref. 1); M. A. Horne, Ph.D. Thesis (Boston University, 1970) (unpublished).

[3] S. J. Freedman and J. F. Clauser, Phys. Rev. Letters 28, 938 (1972); S. J. Freedman, Ph.D. Thesis (University of California, Berkeley, 1972), Lawrence Berkeley Laboratory, Report LBL 391 (unpublished).

[4] It should be noted that when we speak of objectivity, we refer to what is sometimes called strong objectivity. In this view, nature really possesses the aforementioned properties, regardless of an observer's particular technological ability to measure them. Strong objectivity is to be contrasted with weak objectivity. This latter viewpoint merely stipulates that the results of observations are independent of who observes them. The usual interpretations of quantum mechanics are consistent with weak but not strong objectivity. The distinction between these views is discussed by B. d'Espagnat in Ref.14.

Hartle [Am. J. Phys. 36, 704 (1968)] gives a noteworthy alternative definition of objectivity which is, however, unsatisfactory for our purposes. We quote, "...the state will be called an objective property if an assertion of what the state is can be verified by measurements on the individual system without knowledge of the system's history." The ultimate limitation to possible measurements is, unfortunately, unknown, and present limitations may perhaps be only technological ones. Quantum mechanics assumes the uncertainty principle to place a fundamental limitation on measurements. Since it would be circular for us to assume a priori the correctness of a theory whose veracity we currently question, we cannot in the present instance accept this limitation. Hartle's statement is meaningful only if one knows the ultimate limitation to physical measurements. It can equally well be used to define this limitation.

[5] Indeed, Bell (Ref.1) considered a quite general case which included "indeterminism with a certain local character." Unfortunately, this phrase alone was the full extent of his description. Understandably it led to subsequent confusion; see K. Popper, in Perspectives in Quantum Theory: Essays in Honor of Alfred Landé, edited by W. Yourgrau and A. Van der Merwe (MIT Press, Cambridge, 1971), p.182. Some of the confusion was subsequently clarified [J. S. Bell, Science 177, 880 (1972)]. Nonetheless, even though Bell's conclusions were indeed

correct, the difficulties discussed in Ref.8, prevented his analysis from so proving them. Neither a fully general argument, nor a prescription for a conclusive test has heretofore been exhibited.

[6] D. Bohm, Quantum Theory (Prentice Hall Inc., Englewood Cliffs,N.J. 1951), p.614.

[7] J. F. Clauser and M. A. Horne, Part II of this two-part article. Phys. Rev.

[8] J. A. Crawford (see Ref. 1) and P. M. Pearle [Phys. Rev. D 2, 1418 (1970)] have noticed that the systems considered by Bell are not two-state systems, but in fact three-state systems. The third state corresponds to the situation in which one or both particles of a pair are not observed. Bell, to counter this argument suggested that a given apparatus could respond +1 for "spin up," -1 for "spin down," and 0 for "unobserved." Unfortunately, his prescription is either incomplete or ineffective. In the same paper he derives an inequality constraining correlation functions, which to be measurable, must be normalized to the total number of events. If the unobserved flux of particles is assumed to be arbitrarily large, the predictions by quantum mechanics and Bell's assignment yield no violation of his inequality, since his correlation functions vanish in this limit. The unobservability of some events prevents their enumeration in his case. Pearle derived a lower limit to the unobserved flux of particles necessary to prevent an experiment from conclusively testing for the existence of hidden variables. He did not, however, consider the possibility of using only observable data to draw conclusions despite

the existence of the unobserved particles, as we do here. The present discussion avoids the above difficulty by reverting to a consideration of two-state systems. Spin-down particles are grouped with unobserved ones, and both assigned the value zero. This assignment does indeed still yield a violation of the inequality we derive, even for a large flux of unobserved particles.

[9] The idea of readjusting the analyzers while the particles are in flight is originally due (essentially) to D. Bohm and Y. Aharonov, Phys. Rev. 108, 1070 (1957).

[10] It has already been noticed that strict determinism may be incompatible with free will [H. P. Stapp, Phys. Rev. D 3, 1303 (1971)]. Hence, a logically defensible alternative is that spontaneous signal sources cannot exist. In this case a signal may be received outside of the transmitter's light cone, but the causality violation is only apparent. Both the transmitter and receiver were predetermined to exhibit the same signal. The point of origin of the "actual" signal was some point within the light cones of both. Here, then, the locality postulate is meaningless. This position seems rather farfetched, however, since for a Lorentz-invariant objective theory to produce the required correlation in our proposed experiment, it is necessary that the properties of the measured objects actually communicate with the experimenter. Indeed, they must convince the experimenter without his knowledge to set the apparatus in a manner specified by the objects themselves. We will thus ignore this possibility.

[11] To perform an ensemble of identical experiments on an associated ensemble of quantum systems will indeed be expensive! Nor will it even be practical to assure that such ensembles are in fact identical. More practically, one may use an ensemble of identically prepared quantum systems, and the same apparatus repeatedly. To do so one must, however, assume that the associated random processes are ergodic. The invariances of nature required by the ergodic hypothesis [see for example D. Middleton, Introduction to Statistical Communication Theory (McGraw Hill, New York, 1960), p.56] are so natural that they are tacitly assumed by practically every experimenter. Strictly speaking, however, ergodicity does represent an additional assumption, if the experiment is to be performed in this manner.

[12] These results apply only in the low rate limit such that the counter "dead time" is small, i.e.. when $\tau \ll 1/r$.

[13] In any real experiment the effective path lengths and flight times for the paired atoms will vary so that R_a and η^i will both depend upon τ.

[14] B. d'Espagnat, Conceptual Foundations of Quantum Mechanics (Benjamin, Menlo Park, Calif., 1971), Chapters 8, 9, and 16.

[15] J. M. Jauch, in Foundations of Quantum Mechanics, p.20(see Ref.11).

[16] For example, M. L. Goldberger and K. M. Watson [Phys. Rev. 134, B 919 (1964)] consider a system composed of two spin-1/2 particles. They comment: "...In general therefore the observation of the orientation of spin 1 with respect to the axis has an instantaneous effect on the state of the second spin. With the interpretation of an observation as making a selection among the members of an ensemble, this is in no sense surprising." The above discussion shows that such an interpretation cannot of course be considered correct.

[17] W. H. Furry, Phys. Rev. 49, 393 and 476 (1936).

[18] B. d'Espagnat, in Preludes in Theoretical Physics; in Honor of V. F. Weisskopf, edited by DeShalit et al. (North Holland Publ. Co., Amsterdam, 1966), p.185

[19] This principle states that the commutator of any two operators must vanish if they correspond to measurements made outside of each other's light cones. Following R. Haag and B. Schroer [J. Math. Phys. 3, 248 (1962)] this principle is often referred to as the Einstein causality condition. In view of the above discussion and Einstein's conviction concerning physical reality, the term is clearly a misnomer.

FIGURE CAPTIONS

Figure 1. Schematic diagram of Bohm's Gedankenexperiment. Spin-1/2 particles produced by the dissociation of a spin-zero molecule are spin-state selected by Stern-Gerlach magnets and detectors.

Figure 2. Typical detector outputs (first two traces) are converted by procedure outlined in text to records (+1 or 0) shown as the third and fourth traces. Clock pulses are shown as the last trace. During subinterval τ_1, the analyzer orientations are readjusted. Any pulse leading edge falling in subinterval τ_3 is accepted as a "+ 1" event.

Figure 3. Apparatuses A and B with typical associated signal sources and recorders. Surfaces Σ_A and Σ_B do not intersect, and have separation greater than $c\tau$ from the boxes and sources.

Figure 4. Analyzer orientations for maximum violation with $F = +1$ ($\phi = 45°$). Maximum violation for $F = -1$ occurs with $\phi = 135°$ (reverse directions of $\underset{\sim}{b}$ and $\underset{\sim}{b}'$).

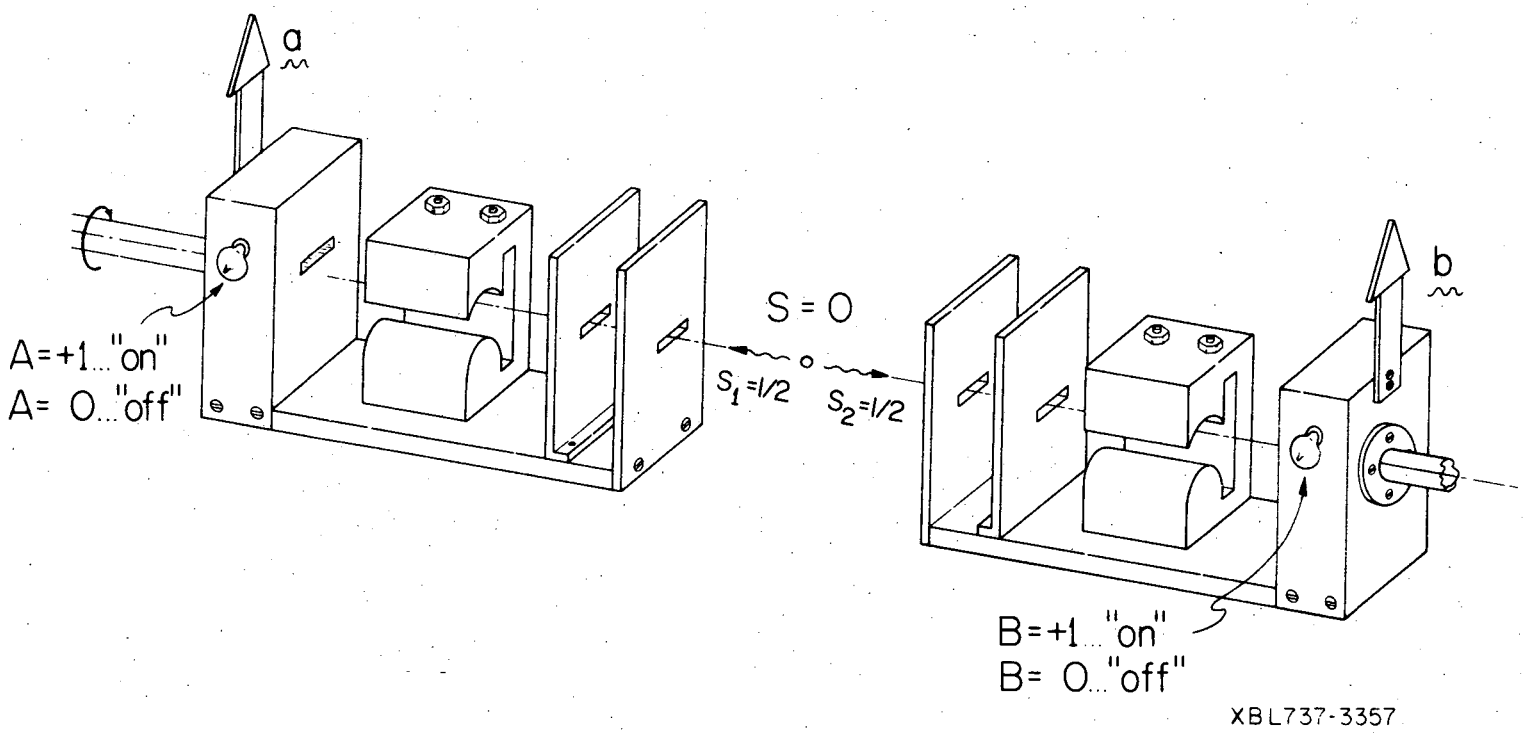

Fig. 1

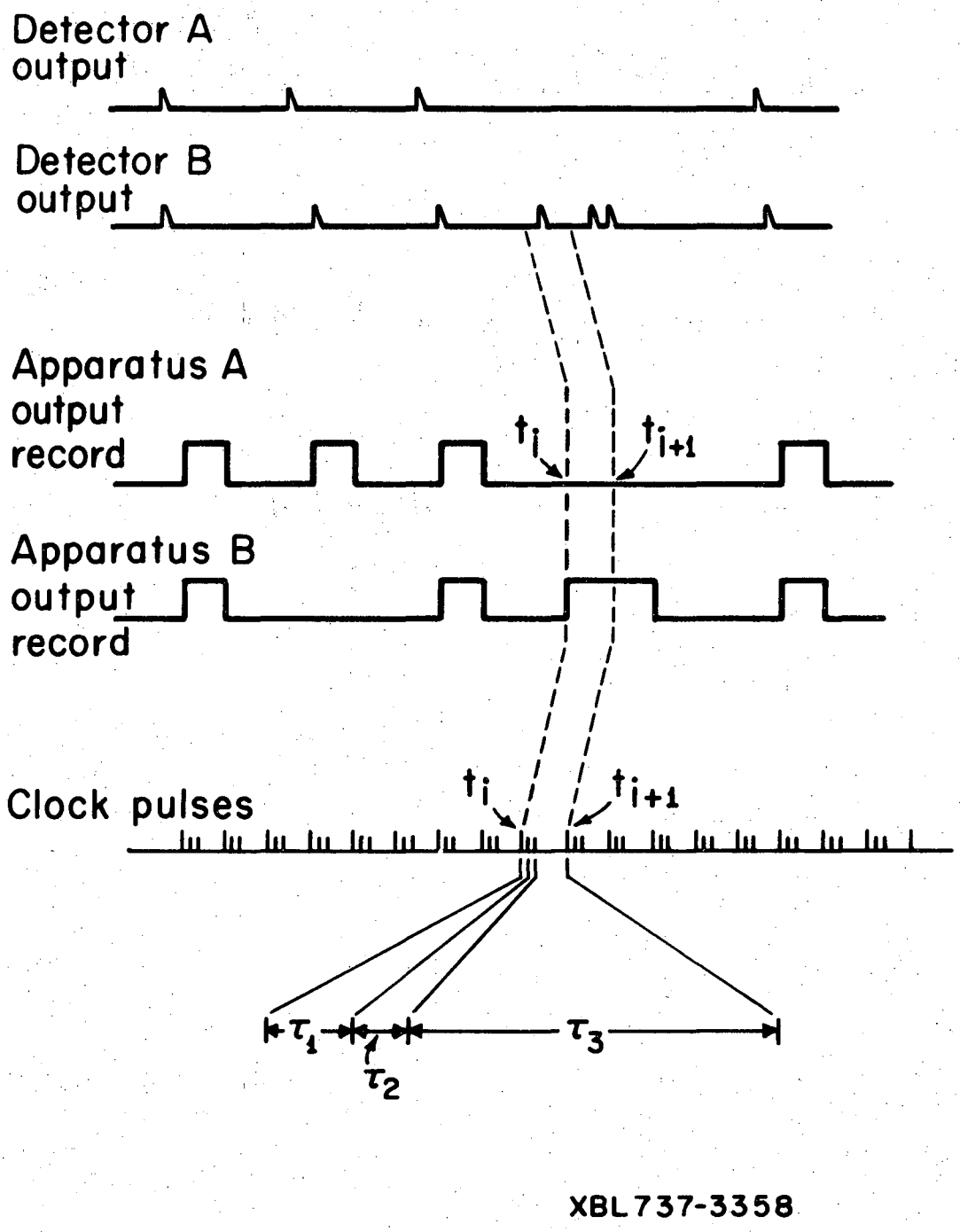
Detector A output
Detector B output
Apparatus A output record
t_i
t_{i+1}
Apparatus B output record
Clock pulses
t_i
t_{i+1}
τ_1
τ_2
τ_3
XBL737-3358

Fig. 2

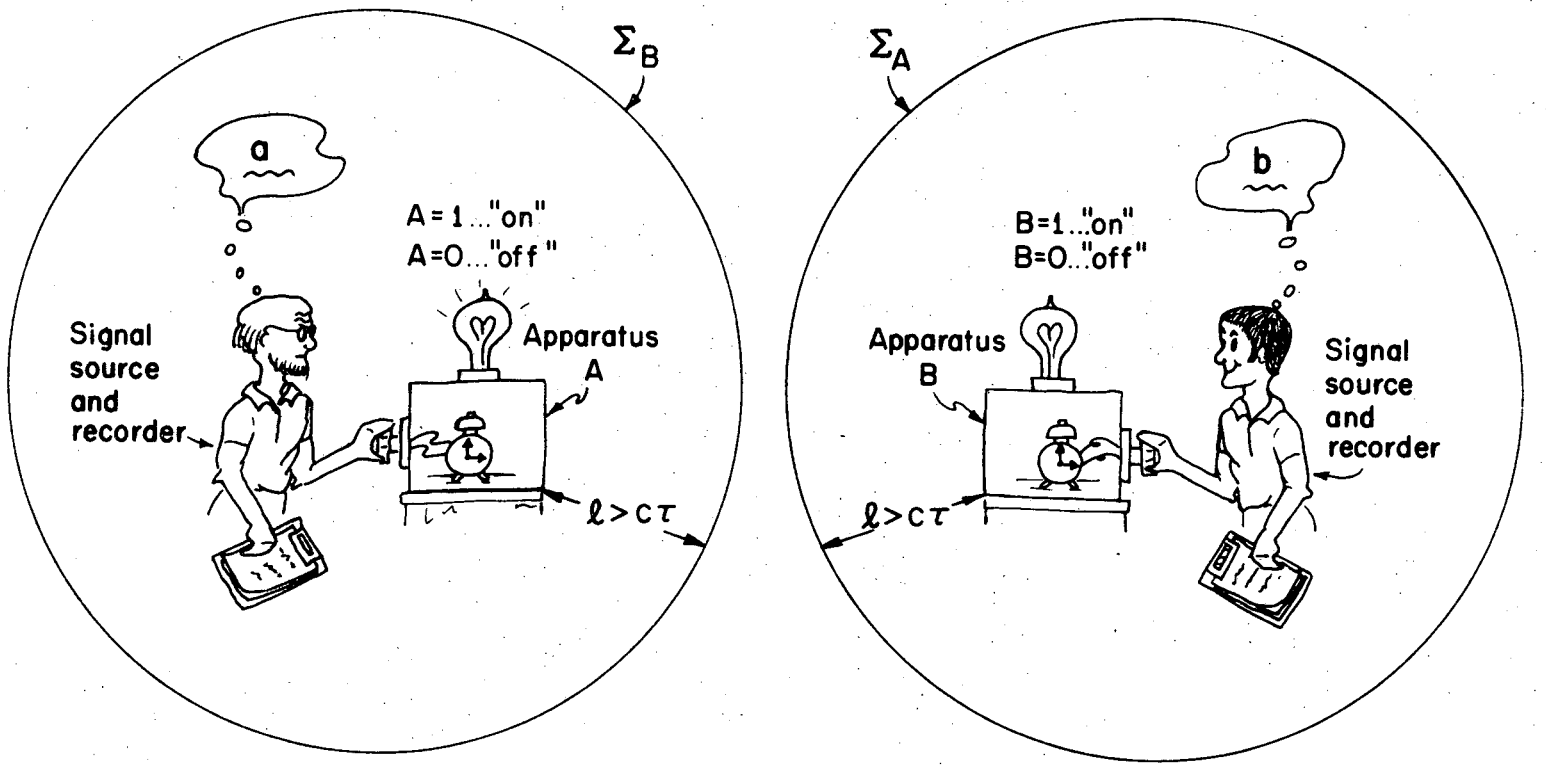

XBL737-3356

Fig. 3

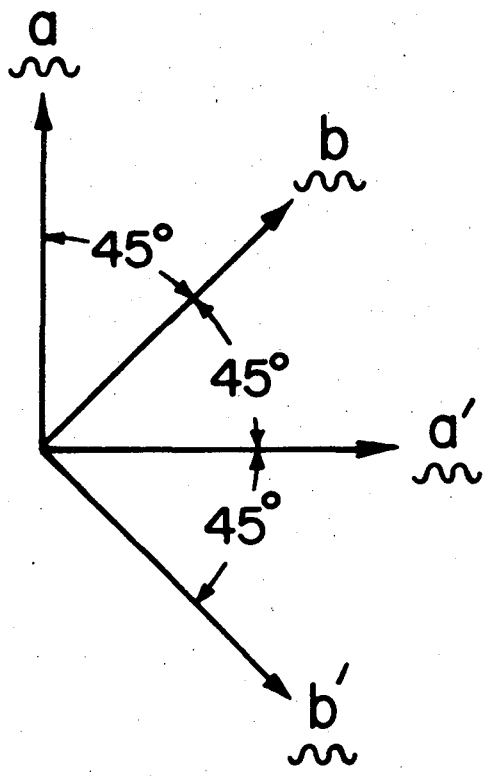

XBL737-3359

Fig. 4

LEGAL NOTICE

This report was prepared as an account of work sponsored by the United States Government. Neither the United States nor the United States Atomic Energy Commission, nor any of their employees, nor any of their contractors, subcontractors, or their employees, makes any warranty, express or implied, or assumes any legal liability or responsibility for the accuracy, completeness or usefulness of any information, apparatus, product or process disclosed, or represents that its use would not infringe privately owned rights.

TECHNICAL INFORMATION DIVISION
LAWRENCE BERKELEY LABORATORY
UNIVERSITY OF CALIFORNIA
BERKELEY, CALIFORNIA 94720