UC-34A
LBL-20848 c.1
Preprint

Lawrence Berkeley Laboratory
UNIVERSITY OF CALIFORNIA

Materials & Molecular Research Division

Submitted to the Journal of Molecular Spectroscopy

RECEIVED
LAWRENCE
BERKELEY LABORATORY

APR 7 1986

LIBRARY AND
DOCUMENTS SECTION

RAMAN LINE POSITIONS IN MOLECULAR HYDROGEN: H_2, HD, HT, D_2, DT, AND T_2

D.K. Veirs and G.M. Rosenblatt

March 1986

For Reference

Not to be taken from this room

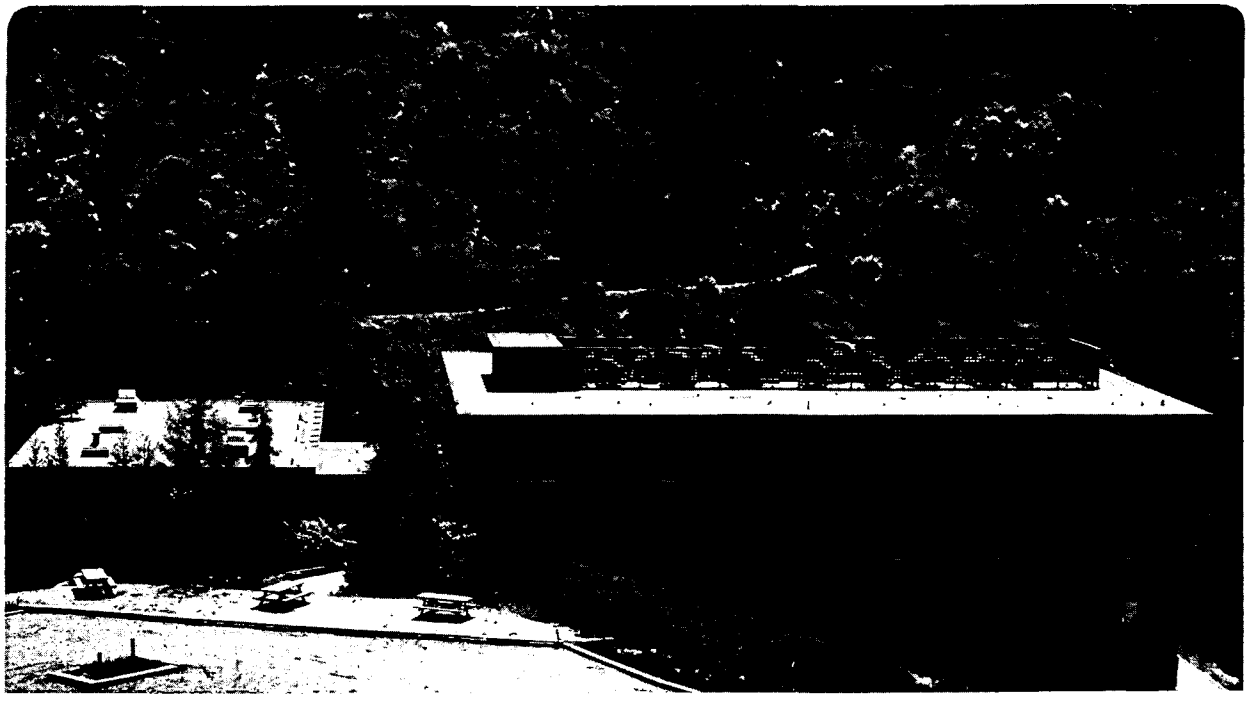

LBL-20848 c.1

Prepared for the U.S. Department of Energy under Contract DE-AC03-76SF00098

DISCLAIMER

This document was prepared as an account of work sponsored by the United States Government. While this document is believed to contain correct information, neither the United States Government nor any agency thereof, nor the Regents of the University of California, nor any of their employees, makes any warranty, express or implied, or assumes any legal responsibility for the accuracy, completeness, or usefulness of any information, apparatus, product, or process disclosed, or represents that its use would not infringe privately owned rights. Reference herein to any specific commercial product, process, or service by its trade name, trademark, manufacturer, or otherwise, does not necessarily constitute or imply its endorsement, recommendation, or favoring by the United States Government or any agency thereof, or the Regents of the University of California. The views and opinions of authors expressed herein do not necessarily state or reflect those of the United States Government or any agency thereof or the Regents of the University of California.

LBL-20848
LA-UR-86-865

RAMAN LINE POSITIONS IN MOLECULAR HYDROGEN: H_2, HD, HT, D_2, DT, AND T_2

D. Kirk Veirs
and
Gerd M. Rosenblatt

Materials and Molecular Research Division
Lawrence Berkeley Laboratory
University of California
Berkeley, California 94720

This work was supported by the Director, Office of Energy Research, U.S. Department of Energy, at Lawrence Berkeley Laboratory under contract number DE-AC-03-76SF-00098 and at Los Alamos National Laboratory under contract number W-7405-ENG-36.

ABSTRACT

Spontaneous Raman spectroscopy is used to determine line positions of the six isotopomers of molecular hydrogen: H_2, HD, HT, D_2, DT, and T_2. State population number densities as low as 1.3×10^8 cm^{-3} are detected with the present experimental apparatus. This sensitivity makes possible measurement of the first overtone Q-branch line positions for H_2 and D_2 and of higher rotational transitions than previous investigations. The line positions for D_2, DT, and T_2 indicate that literature values for molecular parameters do not predict accurately line positions of transitions at J values above the observed transitions from which they were determined. The results for the six molecular isotopomers show that ab initio energy levels restricted to the adiabatic approximation do not yield line positions within the experimental uncertainty whereas recent nonadiabatic calculations reproduce the present observations. Reexamination of literature results at high energies indicates discrepancies between the theoretical calculations and experimental vibrational band origins for all vibrational levels in HT, DT, and T_2 and for $v \geq 3$ in H_2, HD, and D_2. No experimental measurements are currently available that test the accuracy of nonadiabatic ab initio rotational levels at high energies.

INTRODUCTION

The present paper reports Raman spectroscopic determinations of line positions for molecular hydrogen and its isotopomers that are unique in two aspects: (1) enhanced experimental sensitivity allows measurements on a broader range of rotational and vibrational levels than observed previously; and (2) the measurements have been carried out on all six isotopomers, H_2, D_2, T_2, HD, HT, and DT. Although the energy levels of molecular hydrogen have been the subject of extensive earlier experimental investigation and of rigorous and intensive quantum-mechanical calculations, questions remain about the energy levels of hydrogen and its isotopomers that are addressed by the present studies.

On the experimental side, advances in technique enabled earlier investigators to obtain highly accurate line positions for low-lying vibrational and rotational levels in H_2, D_2, HD, and most recently HT [1-6]. Those investigations produced accurate molecular constants that reproduce those measurements with uncertainties in the ten-parts-per-million range. But, because of the light mass of the hydrogen nuclei, such molecular constants have limited utility for predicting rotational-vibrational energy levels higher than the levels used to obtain them. The present paper examines the utility of molecular constants in predicting higher energy levels--as a function of quantum state and nuclear mass, the two major factors leading to inaccuracy in the predicted levels. The lighter the nuclear mass, the larger are the rotational and vibrational energy spacings. The low-order molecular constants, such as B_v and D_v, are correspondingly large. The result is that, at relatively low-values of J and v, the molecule probes the anharmonic region of the potential where higher-order molecular constants are needed. These constants, in turn, are increasingly sensitive to the measured positions

of the highest energy levels observed. The relatively high values of J seen in the present work illustrate that for the molecular hydrogen isotopomers, molecular constants are of limited usefulness for extrapolation to energy levels beyond the last level observed.

On the theoretical side, hydrogen has the fewest electrons of any stable molecule. Ab initio calculations of rotational-vibrational energy levels within the ground electronic state of molecular hydrogen have received considerable and continuing attention. Many of the modern calculations derive from the pioneering work of Kolos and Wolniewicz(7-9) and are described in a recent review by Bishop and Cheung(10). The most extensive calculations go beyond the Born-Oppenheimer approximation by including adiabatic, relativistic, and radiative corrections, as well as corrections for nonadiabaticity. Qualitatively, nonadiabaticity arises because the electrons do not respond instantaneously to the positions of the moving nuclei. Nonadiabatic corrections are required in accurate ab initio calculations for molecular hydrogen because of the light mass, and consequent high velocity, of the nuclei. The nonadiabatic corrections depend upon nuclear mass and whether the two nuclei are identical. A recent calculation by Wolniewicz(11) has incorporated new values for the nonadiabatic corrections with earlier adiabatic(9), relativistic(9), and radiative(10) corrections to obtain energy levels for H_2, D_2, and HD that are reported to an accuracy of 0.01 cm^{-1}. Subsequently, Schwartz and LeRoy(12), in collaboration with the present work, have extrapolated Wolniewicz's results to include the tritium containing molecules. The present measurements provide an experimental test of the need for nonadiabatic corrections to the ab initio energies and, to a lesser degree, how well these corrections scale with isotopic mass.

In the final section of the paper we compare selected, high-accuracy, literature results with the recent nonadiabatic ab initio calculations.

EXPERIMENTAL

The experimental apparatus shown in Fig. 1 consists of a high-power Ar^+ laser (Spectra-Physics 171-18) with an external cavity that contains the sample, optimized collection optics, a double monochromator of f/7.8 with holographic gratings (Spex 1403), a photon-counting photomultiplier tube (RCA C31034A), a microprocessor controlled data acquisition system (Spex Datamate interfaced to an HP85 microcomputer) and a uranium hollow cathode calibration lamp. The external cavity, modeled after Rosenblatt and Asawaroengchai(13), is capable of generating at least 100 Watts of cw radiation in a focal volume of 7.9×10^{-7} cm^3 and is shown in Fig. 2 with the collection optics used when the uranium calibration lamp was not needed. Matched 60 mm focal length quartz lenses focus the laser in the scattering region and then recollimate the beam. A retroreflecting mirror returns the laser along it's original path. The external cavity is vertical with the beam waist parallel to the slits of the spectrometer. The collection optics match the Rayleigh length of the beam waist to the height of the spectrometer's slits. The image of the beam waist is 260 microns in width on the spectrometer slits. A spherical mirror was used to collect the light scattered 180° from the collection optics. The spherical mirror was removed during the higher-resolution line-position determinations to make room for the uranium calibration lamp. The laser was run with 50 Watts circulating in the external cavity.

A sample cell designed to have a minimum gas volume was used because of the radioactive nature of tritium. The sample cell was constructed of aluminum with glass AR coated windows and metal o-rings. Elastomers were avoided because of the destructiveness of tritium towards hydrogen containing

materials. The sample cell has a volume of 1.3 cm^3. Gas pressures of 550 Torr were used and corrections due to pressure shifts were not needed at the resolution attained.

For H_2, a typical run consisted of scanning a 30 cm^{-1} region containing the Raman line of interest and several uranium lines as shown in Fig. 3. Uranium lines from a hollow cathode lamp were used for calibration of each of the H_2 Raman transitions(14). The hollow cathode lamp was focused within the scattering volume and its emission then proceeded through the same optical train as the Raman scattered light. The uranium hollow cathode lamp's dense spectrum, and resulting large contribution to the scattered background, made it necessary to employ a shutter which blocked the lamp when scanning over the Raman line. The scan rate was 0.005 cm^{-1} per step with an integration time of 10 seconds per step. The slits were set at 10 microns entrance and exit and 50 microns intermediate when acquiring uranium calibration lines. As the scan approached the known position of a Raman line the uranium lamp shutter was closed and the slits were opened further, up to an additional 150 microns depending upon the intensity of the Raman transition.

Computer data reduction consisted in finding the center of lines using a code patterned after Hurlock and Hanratty(15), fitting 5 or more calibration lines to a 3rd order polynomial, and using the polynomial to calculate the position of the Raman line as well as a few uranium lines not included in the fit for a check. The polynomial generally reproduced the fitted lines to better than 0.01 cm^{-1} and the additional uranium lines to less than 0.02

cm^{-1}. Some uranium lines yielded much worse fits due to overlaps. A measurement of the Argon laser line yielded 20486.638 cm^{-1}, in error by -0.017 cm^{-1} from the accepted value of 20486.655 cm^{-1}(16).

For the remaining 5 isotopomers Raman spectra were collected without uranium calibration. The spectrometer was scanned at 0.05 cm^{-1}/step. Raman lines for the isotopomers, from the literature, were compared to measured lines yielding a calibration constant for the spectrometer. This constant, 3.9 cm^{-1} in all cases, was added to the remaining lines. The accuracy of lines measured in this manner is estimated to be ±0.1 cm^{-1}. In some cases many measurements were made of the same line and a statistical average of the ensemble is reported.

RESULTS

The experimental line positions are presented in Tables I-IV. All transitions are from the ground vibrational state, v=0. Transitions are designated, e.g. $S_v(J")$, where v=v", the final state vibrational quantum number, and J" is the initial state rotational quantum number. The O-, Q-, and S-branches are the $\Delta J=-2,0,+2$ respectively. In this paper, all pure rotational transitions are in the ground vibrational state and are indicated so $S_o(J)$. All line positions are given as shifts in cm^{-1} from the laser frequency (20486.655 cm^{-1}).

Pressure shifts of the excited vibrational energy levels for H_2(17,18,19), D_2(19) and HD(20,21) are less than 0.01 cm^{-1}/amagat for v=1,2 and will not be considered further. The pressure shifts for the tritium containing isotopomers should not be substantially different from hydrogen and deuterium containing molecules and less than the experimental uncertainty.

The observed line positions for H_2 are reported in Table I. The uncertainty of ±0.03 cm^{-1} is based on the ability to determine uranium lines that are included in the raw data as unknowns (±0.02 cm^{-1}) and the increase in line width resulting from wider slits needed to observe the weaker Raman lines. For extremely weak lines such as $O_1(5)$ and $S_1(5)$ the increased line width will add uncertainties.

Table II presents the observed line positions for D_2. One line, $S_0(0)$, was measured with uranium calibration and has an uncertainty of ±0.03 cm^{-1}. The remaining lines were measured along with the transitions for all of the remaining isotopomers and have an uncertainty of ±0.1 cm^{-1}. For the Stokes and O- and S-branch transitions, two and sometimes more determinations were made resulting in a somewhat reduced uncertainty of ±0.07 cm^{-1}.

In Table III the line positions observed for T_2 are reported. The $S_0(0)$ and $S_0(1)$ transitions were measured with uranium calibration (±0.03 cm^{-1}), while the remaining lines have an uncertainty of ±0.1 cm^{-1}. The $Q_1(0)$ and $Q_1(1)$ transitions overlapped and are not reported.

In Table IV the line positions for the Q_1-branch transitions of HD, HT and DT are given. These measurements were made at the same time as the Q_1-branches of D_2 and T_2 and also have an uncertainty of ±0.1 cm^{-1}. The gas sample contained all three atomic isotopes with the following molecular composition: H_2=0.012%, HD=2.50%, HT=1.67%, D_2=46.20%, DT=40.24% and T_2=9.37%. The relative molecular composition was determined from careful intensity measurements of pure rotational Raman lines and ab initio Raman cross-sections(12). The low relative concentration of HD and HT limited the number of rotational levels observed. The $Q_1(0)$ and $Q_1(1)$ lines of DT overlapped and the line positions could not be adequately determined. The $Q_1(4)$ line of HD overlapped the $S_1(4)$ line of D_2 and this line position could not be determined.

Modern high resolution techniques that have been used to obtain extremely accurate line positions in molecular hydrogen include high resolution Raman spectroscopy(22,23,24), cw CARS(25), stimulated Raman spectroscopy(17,26),

long path-length absorption(3,27,28), laser diode spectroscopy(29,30), Fourier Transform absorption spectroscopy(1,2,31), electric field induced absorption spectroscopy(4), difference frequency laser spectroscopy(5), and most recently photoacoustic spectroscopy(6). The results of these experiments provide a benchmark with which to compare the present line positions for the transitions that have been observed previously. In most cases our results agree within the estimated experimental uncertainty.

In Table V we compare our results for H_2 to Fourier Transform absorption spectroscopy quadruple transitions which have identical selection rules to Raman spectroscopy and are of high accuracy(1,31). The differences confirm our estimated experimental error with an average absolute difference of 0.026 cm^{-1}. The O_1-branch transitions have not been reported previously, however they can be calculated from pure rotational Stokes transitions and Q-branch transitions. Four transitions have not been reported previously, the $Q_1(6)$, $S_1(4)$, $S_1(5)$ and $Q_2(0)$. The rotationless Q_1-branch transitions do not become allowed in absorption by quadruple coupling. The $Q_1(0)$ was reported previously(22) with somewhat lower accuracy.

In Table VI our results for D_2 are compared to previous experiments. The pure rotational Stokes scattering is compared to earlier Raman results(22). The O_1-branch, S_1-branch and $Q_1(1)$, $Q_1(2)$, $Q_1(3)$ and $Q_1(4)$ transitions are compared to accurate difference frequency laser experiments(5). The Q_2-branch and $Q_1(0)$ $Q_1(5)$ and $Q_1(6)$ are compared to electric field induced absorption results(4). The differences are within the combined experimental errors. All of the observed branches have been extended to higher J values in the present work.

In Table VII the results for T_2 are compared to earlier Raman experiments(24), the only measurements that we are aware of. The $S_0(0)$ and $S_0(1)$ lines that we measure with uranium calibration are in fortuitously excellent agreement with the earlier values. The other pure rotational lines agree satisfactorily with previous measurements. The number of pure rotational lines observed has been increased by a factor of 3, from 4 lines to 12 lines. The Q_1-branch results do not agree with the previous measurements, the differences being more than twice the estimated error. The observations are extended to J=10 from J=5. The calibration polynomials of Edwards et al. reproduce their calibration lines with a standard deviation of ± 0.005 cm^{-1}, and this value can be taken as their experimental uncertainty. It appears that the earlier Q_1-branch transitions are systematically 0.2 cm^{-1} higher. This will affect the vibrational separation $\Delta G(v+1/2)$ but not the rotational dependence of the energy levels.

In Table VIII Q_1-branch line positions for HD, HT and DT are compared to the best available previous experimental measurements. For HD the earlier results are from the electric field induced absorption experiments(4). The agreement is satisfactory. For HT and DT, Raman experiments(24,32) are used for comparison. For HT, the differences are substantially outside of the experimental error. The molecular constants of Chuang et al.(6) (motivated by the present findings) can be used to calculate the observed line positions in order to resolve the discrepancy between the two Raman experiments. This has been done by Chuang et al.[6] and the results are reproduced in Table IX. The transitions calculated from their molecular constants agree reasonably well with our experiments. The large discrepancies in the Edwards et al.(24) HT Q_1-branch transitions leaves a question as to the accuracy of the reported uncertainty of ± 0.005 cm^{-1} in the work of Edwards et al. on DT(23) and T_2(24). The HT S_0-branch transitions of Edwards et al. differ from those implied by the molecular constants of Chuang et al.(6) in Table 9 by

0.061 cm^{-1} to 0.403 cm^{-1}. This large range might arise from the uncertainties in the ground vibrational state rotational constants of Chuang et al., however further high-resolution experiments will be needed to verify Edwards et al. results. The previous experiments by Edwards et al. for DT agree with the present results reasonably well.

Our measured line positions do not by themselves lead to new sets of molecular constants that would be improvements over the existing sets. However, the consistent observation of transitions originating from and terminating in rotational energy levels with J values higher than those previously measured yields information pertinent to the vexing problem of molecular constants. There are two approaches to combining the present results with previous determinations of molecular constants. First, by recognizing that high-resolution low-J transitions accurately determine B_v and D_v, the present results at high J can be used to determine new H_v values. Secondly, available molecular constants can be used to calculate line positions at the high J values observed in our measurements; comparison yields insight into the applicability of the molecular constants. In regards to the first approach, it needs to be recognized that at extremely high resolution even low J energy levels are not adequately reproduced with B_v, D_v and H_v so that L_v and M_v are also needed(2,26). At J=10, L_v=-6 x 10^{-8} cm^{-1} reported by Jennings and Brault(2) contributes 8.8 cm^{-1} to the energy for H_2. L_v for T_2, where up to J=13 was probed, will necessarily be smaller but it will still be important within the accuracy of this experiment. Even if new higher-order molecular constants are determined we anticipate that the energy levels calculated from these will rapidly diverge above the J value from which they were fit. Because of the non-constant nature of the

higher-order molecular "constants", and because of recent theoretical calculations to be discussed next, we take the second approach in comparing our results with available molecular constants.

We will only consider those isotopomers for which line positions with significantly higher J than have been reported previously have been determined, D_2, DT and T_2. The branches which will be used for comparison are pure rotational Stokes scattering for D_2 and T_2 and the Q_1-branches for D_2, DT and T_2. In Fig. 4 we show the differences in cm^{-1} between the present line positions and those calculated from molecular constants as a function of rotational quantum number J. The molecular constants are derived from the most accurate experiments reported for each molecule.

For D_2, we compare S_0- and Q_1-branch transitions with the molecular constants of McKellar and Oka[5], which reproduce their observed line positions to less than 0.001 cm^{-1}. The extrapolation of the pure rotational line positions diverges rapidly after J=5 whereas the Q_1-branch line positions do not begin to diverge until after J=8. This is because the differences between molecular constants, $\Delta B=B_0-B_1$ and $\Delta D=D_0-D_1$, are more accurately determined than the molecular constants themselves, B_0, B_1, D_0, D_1, when using Q_1-branch spectra as has been pointed out previously(33). In consequence the positions of the rotational energy levels within v=0 or v=1 are less well known than the differences between vibrational levels.

For DT the Q-branch results are compared to two different sets of molecular constants, Barefield et al.(32) and Edwards et al.(23). The reported line-position accuracies of Barefield et al. are ±0.1 cm^{-1} with

$Q_1(6)$ the highest line observed. The reported line-position accuracies of Edwards et al. are ±0.005 cm^{-1} with $Q_1(4)$ the highest line observed. The same number of molecular constants are reported by each group and both begin to diverge at J immediately following the last observed transition. Even though the Barefield et al. molecular constants are stated to have an order of magnitude higher uncertainty than those of Edwards et al., line positions calculated from the Barefield et al. constants diverge at a higher J.

The S_0- and Q_1-branch results for T_2 are compared to constants from Edwards et al.(24) based upon observations up to $S_0(3)$ and $Q_1(5)$. In this case the v=0 molecular constants appear to be more accurately known than the v=1 molecular constants, as one would expect with the inclusion of the S_0-branch. Again the Q_1-branch begins to diverge almost immediately following the last observed J.

In this section we have presented our results and compared them to the best available experimental measurements for the six isotopomers of molecular hydrogen. All of our measurements agree reasonably well with previous experimental measurements and can be confidently compared to theoretical calculations. However, although molecular constants can be used to back-calculate the line positions of experimentally observed transitions they do not predict accurately line positions of transitions at even the next higher J, at the molecular energies probed in the present experiments.

DISCUSSION

Adiabatic ab initio energy levels for molecular hydrogen are constructed from the Born-Oppenheimer potential(7,8,34) with adiabatic(9), relativistic(9), and radiative(35) corrections. Theoretical energy levels for all six isotopomers of molecular hydrogen are given in the paper of Hunt, Poll, and Wolniewicz(36). Table X presents the average (and its standard deviation) of the differences between those theoretical line positions and our measured Q_1-branch transitions for the fundamental (1-0) and first overtone (2-0). The results show that the differences: 1) are much larger that the experimental uncertainty; 2) depend essentially linearly upon the inverse of the reduced mass; and 3) increase approximately linearly with vibrational quantum number. It is clear that the adiabatic approximation does not yield energy levels for molecular hydrogen to within our spectroscopic accuracy.

Nonadiabatic corrections to the adiabatic energies have been calculated by Bishop and Shih(37) for H_2 and D_2 and their importance is discussed in a review article by Bishop and Cheung(10). The method used is less accurate than existing semi-empirical estimates of the nonadiabatic corrections for v>0(11). More recently Wolniewicz has reported nonadiabatic corrections for H_2, HD and D_2 using a variational-perturbation method(11) that was previously used successfully for the vibrational and rotational energies of the HD^+ ion(38). The average (and its standard deviation) of the differences between our results and line positions calculated from the energy levels of Wolniewicz are shown in Table XI. The average difference is less than the experimental uncertainty and within one standard deviation of zero,

except for the first overtone of H_2. Thus, the available nonadiabatic ab initio energy levels in v=0,1 for H_2 and HD, and v=0,1,2 in D_2 agree with our results; however, for v=2 in H_2 there is a slight disagreement.

The published work of Wolniewicz(11) does not go above J=5 or include the tritium containing isotopomers. In collaboration with our experiments, Schwartz and LeRoy(12) have filled these gaps based upon the results of Wolniewicz(11). They used the Born-Oppenheimer potential of Bishop and Cheung(34), the same adiabatic, relativistic, and radiative corrections as Wolniewicz(11), and included improved values of the isotopic nuclei mass. For the nonadiabatic corrections they fit the results of Wolniewicz for H_2, HD, and D_2 to a function scaled to the proper mass factor. Then, using their fit they determined corrections for all of the isotopomers. Their results include all rovibronic energy levels up to the dissociation limit, as well as static and dynamic polarizability matrix elements for $\Delta J=0,\pm2$, $\Delta v=0,+1,+2$ for all J and v. In Table XII the line positions calculated from the energy levels of Schwartz and LeRoy are compared to our observed line positions. The average differences for all branches of the six isotopomers are within one standard deviation of zero. With the improved nuclear mass, even for v=2 in H_2 there is no disagreement.

Comparison of our experimental results with the ab initio nonadiabatic energy levels of Schwartz and LeRoy show that the theoretical rotational-vibrational energies are accurate to within the uncertainties of our experiments. A more rigorous test of the theoretical calculations can be made by comparison with accurate experimental band origins of excited vibrational levels from the literature. In Fig. 5 the differences between measured band origins and those calculated from the J=0 rotational-vibrational levels of

Schwartz and LeRoy are plotted as a function of final vibrational quantum number for all isotopomers of molecular hydrogen. These differences are slightly lower than the differences reported by Wolniewicz in his Table IX(11). Clearly, the ab initio line positions for the tritium containing isotopomers do not agree with the published experimental measurements for even the first vibrational spacing. The negative difference for DT, while all other isotopomers show positive differences, suggests that the experimental value may be in error. For the isotopomers containing hydrogen and deuterium exclusively, v=1,2 are accurately determined (in D_2 the experimental value for v=2 was reported at 530 psi without pressure shift corrections and should be disregarded for this comparison). However, for these isotopomers there are systematic discrepancies that are larger than the experimental uncertainty, at $v \geq 3$; these increase with increasing v. This comparison of vibrational spacings shows that: 1) for $v \geq 3$ the ab initio calculations systematically deviate from experiment, 2) for the tritium containing isotopomers the extrapolated theoretical energy levels have larger deviations than expected from the results for the non-tritium containing isotopomers, and 3) the differences for DT are not consistent with trends in the rest of the data.

The comparison in the preceding paragraph does not address the accuracy of the rotational energy levels within the vibrational manifolds. The discovery of pure rotational emission spectra from H_2 at very high J (up to J=17) in the shocked region of the Orion molecular cloud(39,40) has stimulated interest in accurate energy levels for H_2 at high J(2,26). Such energy levels are needed to determine the velocity of rotationally excited molecular hydrogen within the Orion molecular cloud via the Doppler shift or to predict line positions not yet observed.

Motivated by this problem, Jennings et al. have carried out precise ($\pm$0.0004 cm^{-1}) determinations of pure rotational transitions up to J=5→7, and also a less precise determination of J=9→11 ($\pm$0.004 cm^{-1})(2,26). Fig. 6 shows the differences between H_2 pure rotational line positions from the calculations of Schwartz and LeRoy and the measured line positions of Jennings et al. The differences are less than 0.005 cm^{-1}, well within the 0.01 cm^{-1} uncertainty in the nonadiabatic corrections estimated by Wolniewicz(5). The energy of the highest J measured (J=11) is more than 7,000 cm^{-1} above J=0, about 17% of the dissociation energy. The ab initio vibrational energies, which have higher nonadiabatic corrections than the rotational energies, do not deviate from experiment by more than 0.15 cm^{-1} at v=4 at about 15,000 cm^{-1}. Jennings et al.(26) combined their measurements with the Orion observations,(39,40) which were corrected for an empirical systemtic offset of 1.0 cm^{-1}, to determine molecular parameters which reproduced their laboratory results within the experimental error and the revised Orion measurements to an average residual of 0.1 cm^{-1}. At J=15, at about 12,000 cm^{-1} above J=0, the pure rotational energy level determined from the molecular parameters of Jennings et al.(26) differs from the theoretical energy level by about 0.5 cm^{-1}; above J=15 the differences increase rapidly as the last term in the molecular parameter series begins to dominate. As the 0.5 cm^{-1} difference may be due to uncertainties in the Orion data this is not experimental evidence of errors in the calculated rotational energy levels.

For the other isotopomers there are no rotational results comparable to Jennings et al.(8) that combine accuracy and high J. The theoretical line positions agree with our measurements within experimental uncertainty ($\leq$ 0.1

cm^{-1}) for all pure rotational Stokes transitions. The measurements extend to final J values of J=10 for D_2 and J=13 for T_2.

To recapitulate the rotation discussion: 1) for molecular hydrogen, the molecular parameters calculated from experimental observations do not predict accurately line positions beyond the last transition used in the fit; 2) for H_2, the nonadiabatic ab initio calculations predict line positions up to J=9 at 7,000 cm^{-1} to within 0.004 cm^{-1}; and 3) the nonadiabatic ab initio calculations predict pure rotational line positions to within our experimental uncertainty in D_2 and T_2. In light of these observations, we conclude that the new nonadiabatic theoretical calculations are the most reliable source for accurate, pure-rotational energy levels of the molecular hydrogen isotopomers.

SUMMARY

In this paper we have presented experimental Raman line positions for the six isotopomers of molecular hydrogen. These line positions cover a broader range of rotation-vibration energy levels than observed previously. Comparison of the observed line positions to available line positions from the literature show agreement within our experimental uncertainty. Differences between the observed line positions and line positions calculated from molecular constants reported in the literature indicate that molecular constants do not predict accurately line positions beyond the last J value from which they were determined.

Theoretical ab initio energy levels constructed from the Born-Oppenheimer potential with adiabatic, relativistic and radiative corrections do not reproduce the observed line positions within the experimental uncertainty. Nonadiabatic corrections to the theoretical energy levels calculated for H_2, HD, and D_2 by Wolniewicz yield energy levels in v = 0,1 for H_2 and HD and in v = 0,1,2 in D_2 which agree with our results; however, there is slight disagreement for v = 2 in H_2.

Schwartz and LeRoy have extrapolated the nonadiabatic corrections to the remaining isotopomers using a function scaled to the proper mass factors and fit to the results of Wolniewicz. Their ab initio energy levels, which also include improved values of the isotopic nuclei mass, reproduce the observed line positions for all isotopomers within the experimental uncertainties. Upon comparing these nonadiabatic ab initio energy levels and experimental band origins from the literature we find: 1) for $v \geq 3$, the theoretical

vibrational spacings deviate from experiment; 2) for the tritium containing iosotopomers the theoretical vibrational spacings show larger deviations at lower values of v than expected from the results for the non-tritium containing isotopomers; and 3) the differences for DT are not consistent with trends in the rest of the data.

Comparing the theoretical energy levels to pure rotational spectra from the present work and from the literature, we conclude that the nonadiabatic ab initio calculations are the most reliable source of pure-rotational energy levels for the molecular hydrogen isotopomers.

These results point out areas which would benefit from additional work. On the theoretical side there remain discrepancies in the vibrational spacings for $v \geq 3$ between theory and experiment and there is a need for calculated (as opposed to extrapolated) nonadiabatic corrections to the energies for the tritium containing isotopomers. Experimentally, transition frequencies in the tritium containing isotopomers would benefit from the advances in techniques which have been applied to H_2, HD and D_2. In addition, experimental measurements of transitions at high J are needed to test the accuracy of the nonadiabatic rotational energy levels.

ACKNOWLEDGEMENT

We thank C. Schwartz and R.J. LeRoy for providing their unpublished results which we have used throughout this paper. Without their results we would not have nonadiabatic *ab initio* energy levels for the tritium containing isotopomers with which to compare our results. We would also like to thank M.-L. Chuang and R.N. Zare for providing their initial results on HT and for useful discussions.

This work was supported by the Director, Office of Energy Research, U.S. Department of Energy, at Lawrence Berkeley Laboratory under contract number DE-AC-03-76SF-00098 and at Los Alamos National Laboratory under contract number W-7405-ENG-36.

BIBLIOGRAPHY

1. S. L. Bragg, J. W. Brault, and W. H. Smith, The Astro. J. 263, 999-1004 (1982).
2. D. E. Jennings and J. W. Brault, J. Mol. Spec. 102, 265-272 (1983).
3. N. H. Rich, J. W. C. Johns, and A. R. W. McKellar, J. Mol. Spec. 95, 432-438 (1982).
4. P. J. Brannon, C. H. Church, and C. W. Peters, J. Mol. Spec. 27, 44-54 (1968).
5. A. R. W. McKellar and T. Oka, Can. J. Phys. 56, 1315-1320 (1978).
6. M.-L. Chuang and R. N. Zare, private communication.
7. W. Kolos and L. Wolniewicz, J. Chem. Phys. 43, 2429-2441 (1965).
8. W. Kolos and L. Wolniewicz, J. Chem. Phys. 49, 404-410 (1968).
9. W. Kolos and L. Wolniewicz, J. Chem. Phys. 41, 3663-3673 (1964).
10. D. M. Bishop and L. M. Cheung, Adv. Quant. Chem. 12, 1-42 (1980).
11. L. Wolniewicz, J. Chem. Phys. 78, 6173-6181 (1983).
12. C. Schwartz and R. J. LeRoy, private communication.
13. C. Asawaroengchai and G. M. Rosenblatt, J. Chem. Phys. 72, 2664-2669 (1980).
14. Byron A. Palmer, Richard A. Keller, and Rolf Engleman, Jr., "An Atlas of Uranium Emission in a Hollow Cathode Discharge", Los Alamos Scientific Laboratory Report #LA-8251-MS, July 1980.
15. S. C. Hurlock and J. R. Hanratty, App. Spec. 28, 362-368 (1974).
16. A. Weber, Raman Spectroscopy of Gases and Liquids, ed. A. Weber, "Resolution Rotational Raman Spectra of Gases," p. 72, Springer-Verlag, Berlin, New York, 1979.
17. P. Lallemand, P. Simova, and G. Bret, Phys. Rev. Lett. 17, 1239-1241 (1966).

18. V. G. Cooper, A. D. May, and B. K. Gupta, Can. J. Phys. 48, 725-729 (1970).

19. E. C. Looi, J. C. Stryland, and H. L. Welsh, Can. J. Phys. 56, 1102-1108 (1978).

20. F. W. Dalby and J. Vigue, Phys. Rev. Lett. 43, 1310-1314 (1979).

21. S. Nazemi, A. Javan, and A. S. Pine, J. Chem. Phys. 78, 4797-4805 (1983).

22. B. P. Stoicheff, Can. J. P. 35, 730-741 (1957).

23. H. G. M. Edwards, D. A. Long, H. R. Mansour, and K. A. B. Najm, J. Raman Spec. 8, 251-254 (1979).

24. H. G. M. Edwards, D. A. Long, and H. R. Mansour, J. Chem. Soc. Faraday Trans. II 74, 1203-1207 (1978).

25. M. A. Henesian, M. D. Duncan, R. L. Byer, and A. D. May, Opt. Lett. 1, 149-151 (1977).

26. D. E. Jennings, L. A. Rahn, and A. Owyoung, The Astro. J. 291, L15-L18 (1985).

27. U. Fink, T. A. Wiggins, and D. H. Rank, J. Mol. Spec. 18, 384-395 (1965).

28. A. R. W. McKellar, W. Goetz, and D. A. Ramsay, The Astro. J. 207, 663-670 (1976).

29. J. Reid and A. R. W. McKellar, Phys. Rev. A 18, 224-228 (1978).

30. V. De Cosmo, H. P. Gush, and M. Halpern, Can. J. Phys. 62, 1713-1718 (1984).

31. D. E. Jennings and J. W. Brault, The Astro. J. 256, L29-L31 (1982).

32. J. E. Barefield, L. H. Jones and R. Liepens, J. Mol. Spec. 80, 233-236 (1980).

33. D. L. Albritton, W. J. Harrop, A. L. Schmeltekopf, R. N. Zare and E. L. Crow, J. Mol. Spec. 46, 67-88 (1973).

34. D. M. Bishop and L. M. Cheung, Phys. Rev. A 18, 1846-1852 (1978).

35. D. M. Bishop and L. M. Cheung, J. Chem. Phys. 69, 18811883 (1978).

36. J. L. Hunt, J. D. Poll, and L. Wolniewicz, Can. J. Phys. 62, 1719-1723 (1984).

37. D. M. Bishop and S. Shih, J. Chem. Phys. 64, 162-169 (1976).

38. L. Wolniewicz and J. D. Poll, J. Chem. Phys. 73, 6225-6231 (1980).

39. R. F. Knacke and E. T. Young, The Astro. J. 242, L183-L186 (1980).

40. R. F. Knacke and E. T. Young, The Astro. J. 249, L65-L69 (1981).

LIST OF TABLES

TABLE I Observed H_2 Raman Line Positions

TABLE II Observed D_2 Raman Line Positions

TABLE III Observed T_2 Raman Line Positions

TABLE IV Observed HD, HT and DT Q_1-Branch Line Positions

TABLE V Comparison of Measured Line Positions to Best Previous Experiments for H_2

TABLE VI Comparison of Measured Line Positions to Best Previous Experiments for D_2

TABLE VII Comparison of Measured Line Positions to Best Previous Experiments for T_2

TABLE VIII Comparison of Measured Line Positions to Best Previous Experiments for HD, HT and DT Q_1-Branches

TABLE IX Comparison of Results for HT

TABLE X Average Differences Between Experiment and Q-Branch Line Positions Calculated from Adiabatic, Ab Initio Energy Levels

TABLE XI Average Differences in Q_1-Branch Line Positions Between Experiment and Nonadiabatic, Ab Initio Energy Levels

TABLE XII Average Differences in Q-Branch Positions Between Experiment and Nonadiabatic, Ab Initio Energy Levels Extrapolated to all isotopomers of Molecular Hydrogen

TABLE I

Observed H_2 Raman Line Positions[a)]

J	S_0-BRANCH (cm^{-1})	O_1-BRANCH (cm^{-1})	Q_1-BRANCH (cm^{-1})	S_1-BRANCH (cm^{-1})	Q_2-BRANCH (cm^{-1})
0	354.365	----------	4161.200	4497.848	8087.030
1	587.087	----------	4155.281	4712.938	8075.283
2	814.456	3806.859	4143.493	4917.032	8051.964
3	1034.698	3568.239	4125.903	5108.415	8017.168
4	1246.082	3329.144	4102.592	5285.632	----------
5	1447.247	3091.141	4073.698	5448.037	----------
6	----------	----------	4039.451	----------	----------

a) estimated uncertainty $\pm 0.03\ cm^{-1}$.

TABLE II

Observed D_2 Raman Line Positions

J	S_0-BRANCH[a)]	O_1-BRANCH[a)]	Q_1-BRANCH[c)]	S_1-BRANCH[a)]	Q_1-BRANCH[c)]
0	179.108[b)]	-------	2993.6	-------	5868.1
1	297.51	-------	2991.5	-------	5863.9
2	414.61	2814.57	2987.2	3387.22	5855.6
3	529.81	2694.11	2981.0	3492.03	5843.0
4	642.71	2572.50	2972.5	-------	5826.3
5	752.91	2451.05	2962.2	3688.36	-------
6	859.76	-------	2949.7	-------	-------
7	963.16	2209.23	2935.2	3863.82	-------
8	1062.57	-------	2918.8	-------	-------
9	-------	-------	2900.6	-------	-------

a) estimated uncertainty ± 0.07 cm^{-1}.
b) estimated uncertainty ± 0.03 cm^{-1}.
c) estimated uncertainty ± 0.1 cm-1.

TABLE III

Observed T_2 Raman Line Positions

J	S_0-BRANCH[a] (cm^{-1})	Q_1-BRANCH[a] (cm^{-1})
0	120.051[b]	---------
1	199.681[b]	---------
2	278.9	2461.0
3	357.0	2457.5
4	434.1	2453.0
5	510.0	2447.3
6	584.3	2440.5
7	657.0	2432.5
8	727.8	2423.5
9	796.7	2413.2
10	863.2	2402.2
11	927.8	

a) estimated uncertainty $\pm 0.1\ cm^{-1}$.
b) estimated uncertainty $\pm 0.03\ cm^{-1}$.

TABLE IV

Observed HD, HT and DT Q_1-Branch Line Positions[a)]

J	HD (cm^{-1})	HT (cm^{-1})	DT (cm^{-1})
0	3632.2	3434.9	--------
1	3628.4	3431.6	--------
2	3620.6	3425.1	2738.4
3	3609.2	3415.6	2733.7
4	--------	3402.8	2727.2
5	3574.9	--------	2719.2
6	--------	--------	2709.8
7	--------	--------	2698.5
8	--------	--------	2686.3

a) estimated uncertainty $\pm 0.1\ cm^{-1}$.

TABLE V

Comparison of Measured Line Positions to Best Previous Experiments for H_2

	J	Veirs and Rosenblatt (cm^{-1})	Previous Experiments (cm^{-1})	Difference (cm^{-1})
S_0-BRANCH[a)]	0	354.365	354.37350	-0.009
	1	587.087	587.03211	0.055
	2	814.456	814.42473	0.031
	3	1034.698	1034.67024	0.028
	4	1246.082	1246.09811	-0.016
	5	1447.247	1447.27882	-0.032
O_1-BRANCH	2	3806.859	----------	--------
	3	3568.239	----------	--------
	4	3329.144	----------	--------
	5	3091.141	----------	--------
Q_1-BRANCH	0	4161.200	----------	--------
	1	4155.281	4155.24907	0.032
	2	4143.493	4143.46071	0.032
	3	4125.903	4125.86815	0.035
	4	4102.592	4102.5780	0.014
	5	4073.698	4073.739	-0.041
	6	4039.451	----------	--------
S_1-BRANCH[b)]	0	4497.848	4497.83426	0.014
	1	4712.938	4712.90046	0.038
	2	4917.032	4917.00327	0.029
	3	5108.415	5108.39878	0.016
	4	5285.632	----------	--------
	5	5448.037	----------	--------
Q_2-BRANCH[b)]	0	8087.030	----------	--------
	1	8075.283	8075.29894	-0.016
	2	8051.964	8051.9797	-0.016
	3	8017.168	8017.1749	-0.007

a) Previous experimental data from Ref. (8).
b) Previous experimental data from Ref. (7).

TABLE VI

Comparison of Measured Line Positions to Best Previous Experiments for D_2

	J	Veirs and Rosenblatt (cm^{-1})	Previous Experiments (cm^{-1})	Difference (cm^{-1})
S_0-BRANCH	0	179.108	179.056	0.052
	1	297.51	297.521	-0.01
	2	414.61	414.655	-0.05
	3	529.81	529.907	-0.1
	4	642.71	642.807	-0.1
	5	752.91	----------	-------
	6	859.76	----------	-------
	7	963.16	----------	-------
	8	1062.57	----------	-------
O_1-BRANCH	2	2814.57	2814.5449	0.02
	3	2694.11	4693.9723	0.14
	4	2572.50	2572.6428	-0.14
	5	2451.05	----------	-------
	6	----------	----------	-------
	7	2209.23	----------	-------
Q_1-BRANCH	0	2993.6	2993.600	0.0
	1	2991.5	2991.5043	0.0
	2	2987.2	2987.2955	-0.1
	3	2981.0	2980.9882	0.0
	4	2972.5	2972.6128	-0.1
	5	2962.2	2962.176	0.0
	6	2949.7	2949.685	0.0
	7	2935.2	----------	-----
	8	2918.8	----------	-----
	9	2900.6	----------	-----
S_1-BRANCH	0	----------	3166.3596	-------
	1	----------	3278.5222	-------
	2	3387.22	3387.2606	-0.04
	3	3492.03	3492.0913	-0.06
	4	----------	----------	-------
	5	3688.36	----------	-------
	6	----------	----------	-------
	7	3863.82	----------	-------
Q_2-BRANCH	0	5868.1	5868.00	0.0
	1	5863.9	5863.84	0.1
	2	5855.6	5855.48	0.1
	3	5843.0	----------	-----
	4	5826.3	----------	-----

TABLE VII

Comparison of Measured Line Positions to Best Previous Experiments for T_2

	J	Veirs and Rosenblatt (cm^{-1})	Previous[a] Experiments (cm^{-1})	Difference (cm^{-1})
S_0-BRANCH	0	120.051	120.049	0.002
	1	199.681	199.695	-0.006
	2	278.9	278.732	0.2
	3	357.0	356.954	0.0
	4	434.1	----------	-----
	5	510.0	----------	-----
	6	584.3	----------	-----
	7	657.0	----------	-----
	8	727.8	----------	-----
	9	796.7	----------	-----
	10	863.2	----------	-----
	11	927.8	----------	-----
Q_1-BRANCH	0	---------	2464.320	-----
	1	---------	2463.155	-----
	2	2461.0	2460.822	0.2
	3	2457.5	2457.339	0.2
	4	2453.0	2452.725	0.3
	5	2447.3	2447.021	0.3
	6	2440.5	----------	-----
	7	2432.5	----------	-----
	8	2423.5	----------	-----
	9	2413.2	----------	-----
	10	2402.2	----------	-----

a) Ref. (24).

TABLE VIII

Comparison of Measured Line Positions to Best Previous Experiments for HD, HT and DT Q_1-Branches

	J	Veirs and Rosenblatt (cm^{-1})	Previous Experiments (cm^{-1})	Difference (cm^{-1})
HD[a)]	1	3628.4	3628.278	0.1
	2	3620.6	3620.616	0.0
	3	2609.2	3609.093	0.1
	4	---------	3593.910	-----
	5	3574.9	----------	-----
HT[b)]	0	3434.9	3428.370	6.5
	1	3431.6	3425.133	6.5
	2	3425.6	3418.671	6.4
	3	3415.6	3409.047	6.6
	4	3402.8	3396.397	6.4
DT[c)]	0	----------	2743.436	-----
	1	----------	2741.813	-----
	2	2738.4	2738.579	-0.2
	3	2733.7	2733.787	-0.1
	4	2727.2	2727.448	-0.2
	5	2719.2	2719.4	-0.2
	6	2709.8	2709.8	0.0
	7	2698.5	----------	-----
	8	2686.3	----------	-----

a) Previous experimental values from Ref. (10).
b) Previous experimental values from Ref. (23).
c) Previous experimental values from Ref. (23); $Q_1(5)$ and $Q_1(6)$ from Ref. (32).

TABLE IX

Comparison of Results for HT

Transition	Chuang et al.[a] (cm^{-1})	Edwards et al.[b] (cm^{-1})	Veirs et al.[c] (cm^{-1})
$S_0(0)$	237.866	237.927	--------
$S_0(1)$	394.800	394.952	--------
$S_0(2)$	549.267	549.670	--------
$Q_1(0)$	3434.806	3428.370	3434.9
$Q_1(1)$	3431.568	3425.13	3431.6
$Q_1(2)$	3425.103	3418.671	3425.1
$Q_1(3)$	3415.438	3409.047	3415.6
$Q_1(4)$	3402.599	3396.397	3402.8

a) Ref. (6), calculated from the least -squares fitted molecular constants.
b) Ref. (23).
c) Ref. this work.

TABLE X

Average Differences Between Experiment and Q-Branch Line Positions Calculated from Adiabatic, Ab Initio Energy Levels[a)]

	Q_1-BRANCH (cm^{-1})	Q_2-BRANCH (cm^{-1})
H_2	0.854 ± 0.020	1.677 ± 0.022
HD	0.63 ± 0.06	----------
HT	0.56 ± 0.08	----------
D_2	0.37 ± 0.05	0.71 ± 0.07
DT	0.32 ± 0.10	----------
T_2	0.16 ± 0.07	----------

a) The standard deviation of the differences are reported, not the experimental uncertainty, in Tables X, XI, and XII.

TABLE XI

Average Differences in Q_1-Branch Line Positions Between Experiment and Nonadiabatic, Ab Initio Energy Levels

	Q_1-BRANCH (cm^{-1})	Q_2-BRANCH (cm-1)
H_2	0.004 ± 0.020	-0.046 ± 0.023
HD	0.04 ± 0.05	----------
D_2	-0.03 ± 0.05	-0.08 ± 0.08

TABLE XII

Average Differences in Q-Branch Positions Between Experiment and Nonadiabatic, Ab Initio Energy Levels Extrapolated to All Isotopomers of Molecular Hydrogen

	Q_1-BRANCH (cm^{-1})	Q_2-BRANCH (cm^{-1})
H_2	0.005 ± 0.027	-0.024 ± 0.023
HD	0.03 ± 0.06	----------
HT	0.00 ± 0.10	----------
D_2	0.09 ± 0.09	0.06 ± 0.09
DT	0.04 ± 0.08	----------
T_2	-0.01 ± 0.08	----------

FIGURE CAPTIONS

1. Schematic diagram of the experimental setup. The laser beam was actually vertical in the scattering region.

2. The final external cavity/collection optics design. The focal lengths and diameters of the lenses and mirrors are determined from the physical characteristics of the laser and monochromator.

3. H_2 $S_o(S)$ pure rotational line with Uranium calibration. The y-axis is the intensity in counts per second and x-axis is the Raman shift in cm^{-1}. A shutter rejected the uranium hollow cathode lamp light when the spectrometer scanned over the Raman line of interest. The entrance and exit slits were increased when scanning over the Raman line to insure detectable levels of light.

4. Differences between the measured line positions and line positions calculated from molecular parameters. The y-axis is the differences in cm^{-1} and the x-axis is the initial rotational quantum number, J".
A) Results for D_2, Ref. (25). ( ) S_0-branch, (Δ) Q_1-branch.
B) Results for DT showing two sets of molecular parameters. ( )Q_1-branch Ref. (23), (Δ) Q_1-branch Ref. (32). C) Results for T_2 Ref. (24). ( ) S_0-branch, (Δ) Q_1-branch.

5. Differences between the vibrational band origins from the theoretical calculations of Schwartz and LeRoy, Ref. (12), and the reported experimental values for H_2, HD, HT, D_2, HT, and T_2. The y-axis is the differences in 0.001 cm^{-1} and along the x-axis is the final vibrational quantum number v' for each molecular species. The sources for the experimental band origins are: H_2--Ref. (1), HD--Ref. (28), HT--Ref. (6), D_2--Ref. (4,5), DT--Ref. (23), and T_2--Ref. (24).

6. Differences between S_0-branch line positions for H_2 calculated from the theoretical energy levels of Schwartz and LeRoy, Ref. (12), and the experimental measurements of Jennings et al., Ref. (2,26). The y-axis is the differences in 0.001 cm^{-1} and the x-axis is the initial rotational quantum number J". The error bars are the reported experimental uncertainties.

Figure 1

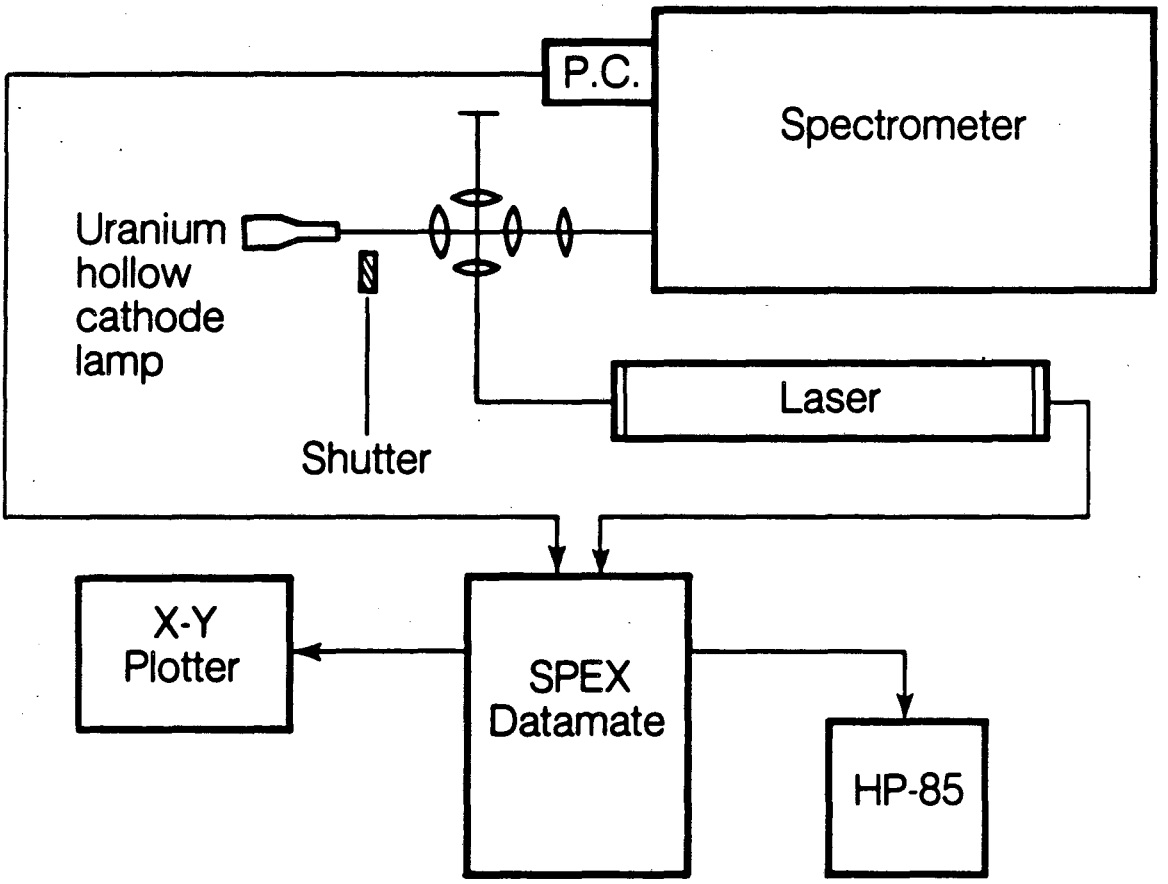

XBL 862-11025

Figure 2

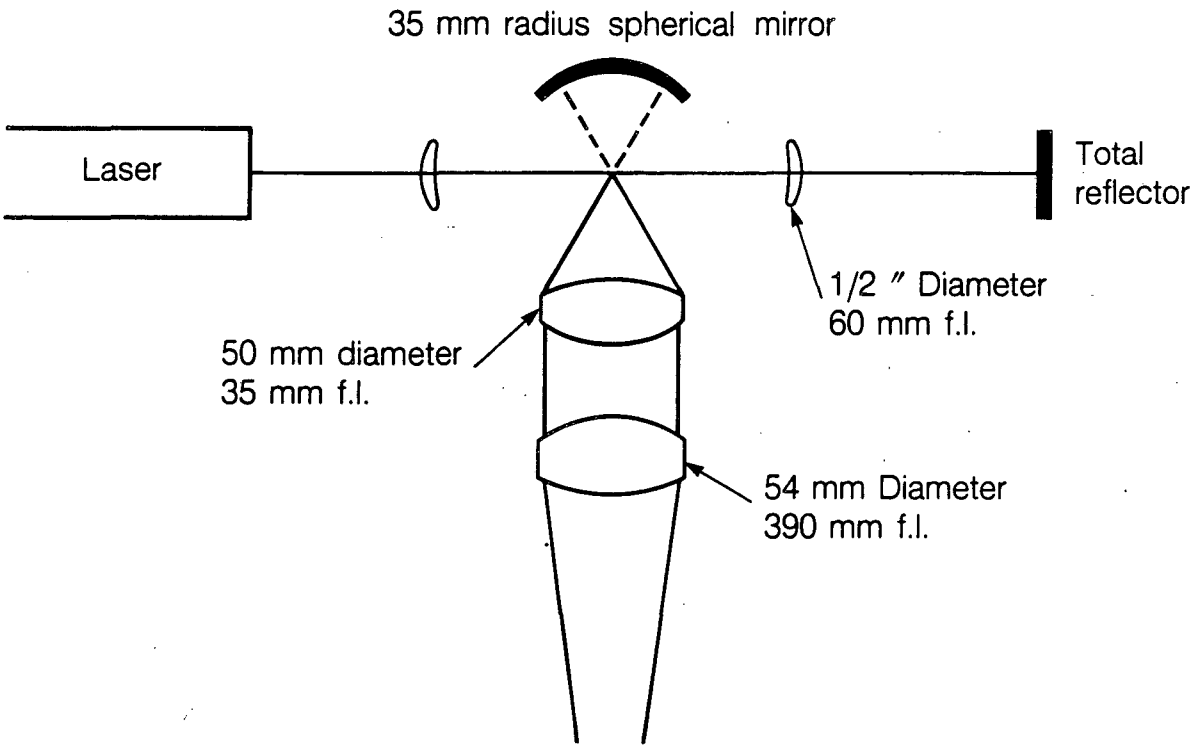

XBL 8511-12188 A

Figure 3

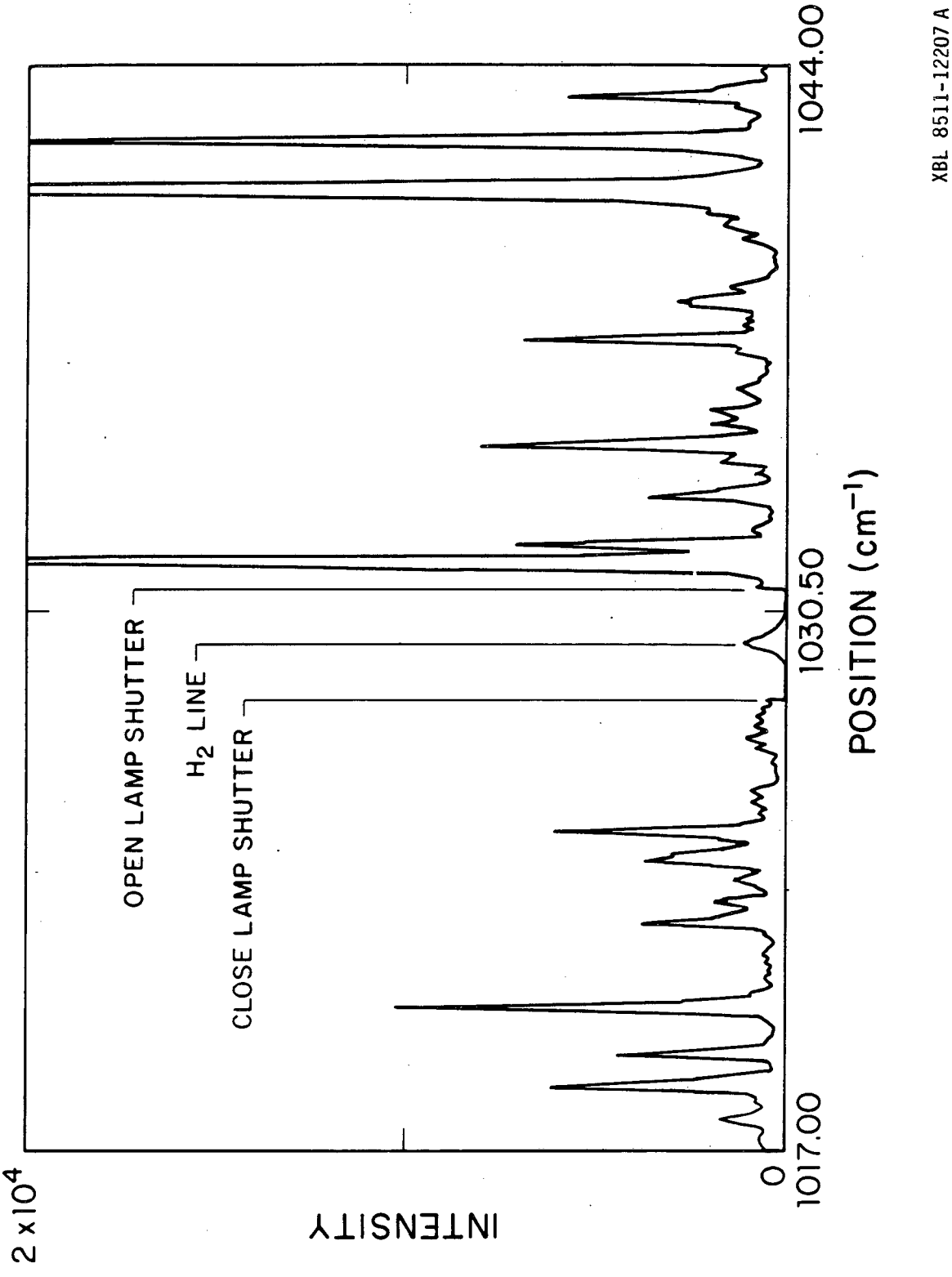

XBL 8511-12207 A

Figure 4

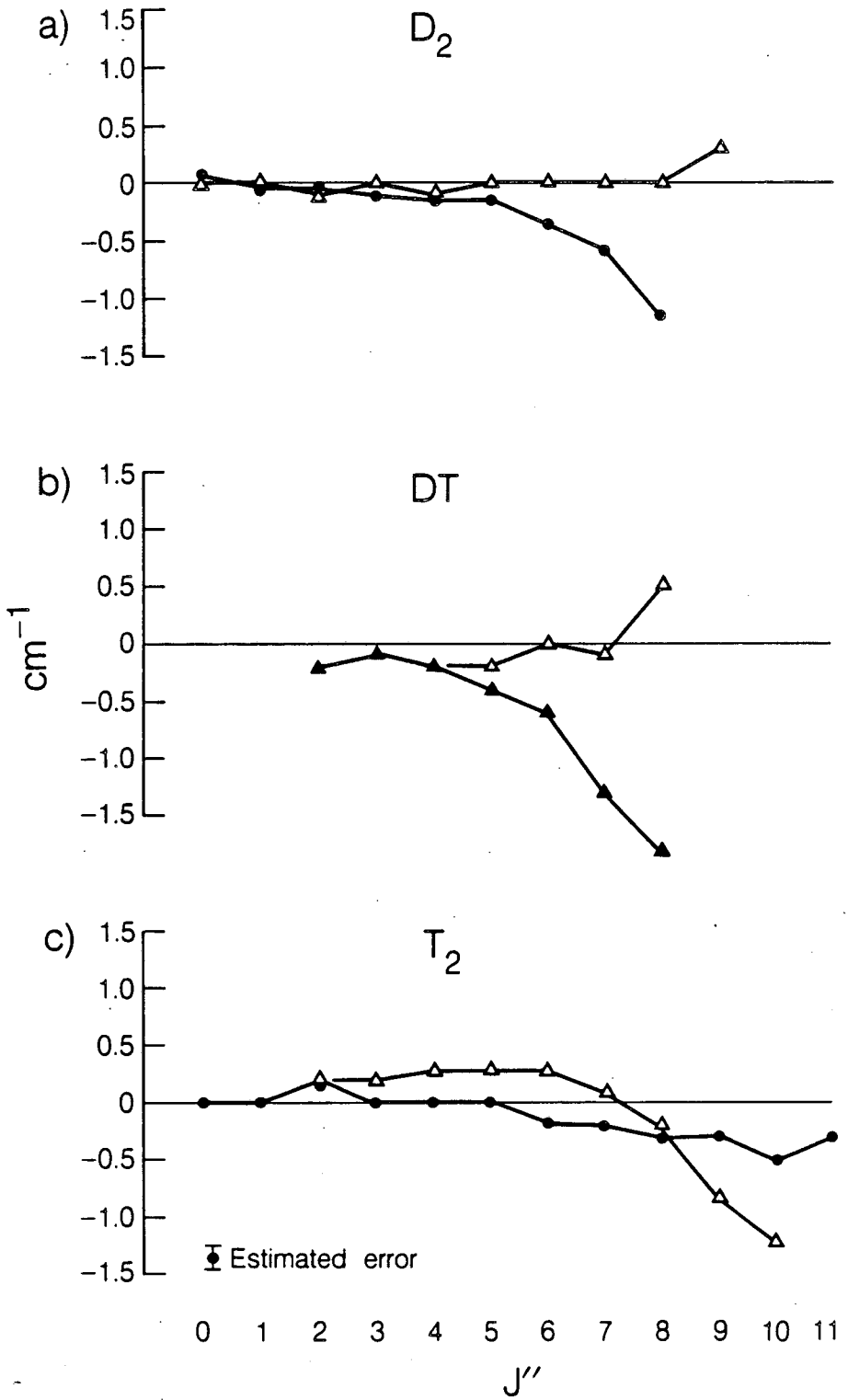

XBL 862-11027

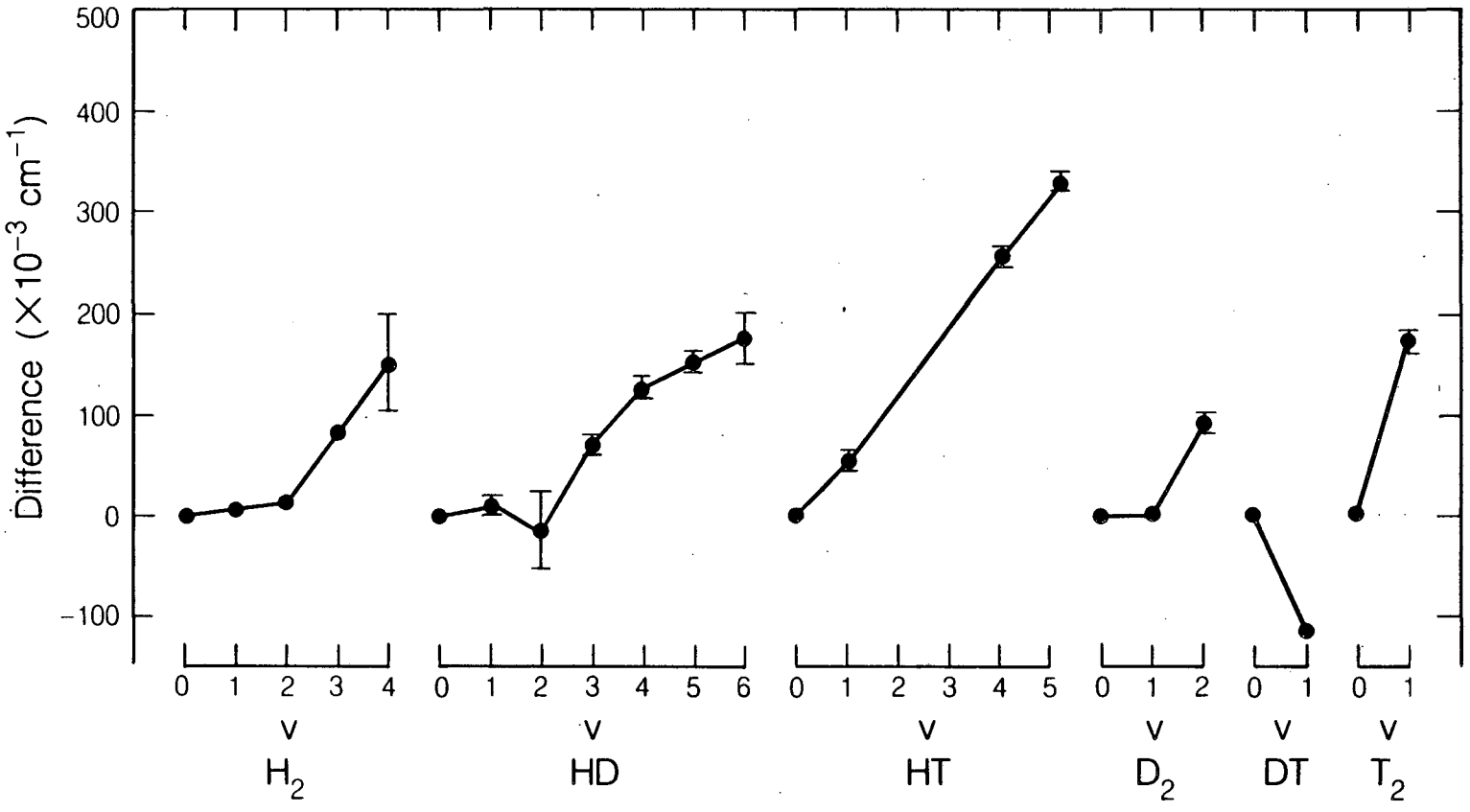

XBL 862-11026

Figure 5

Figure 6

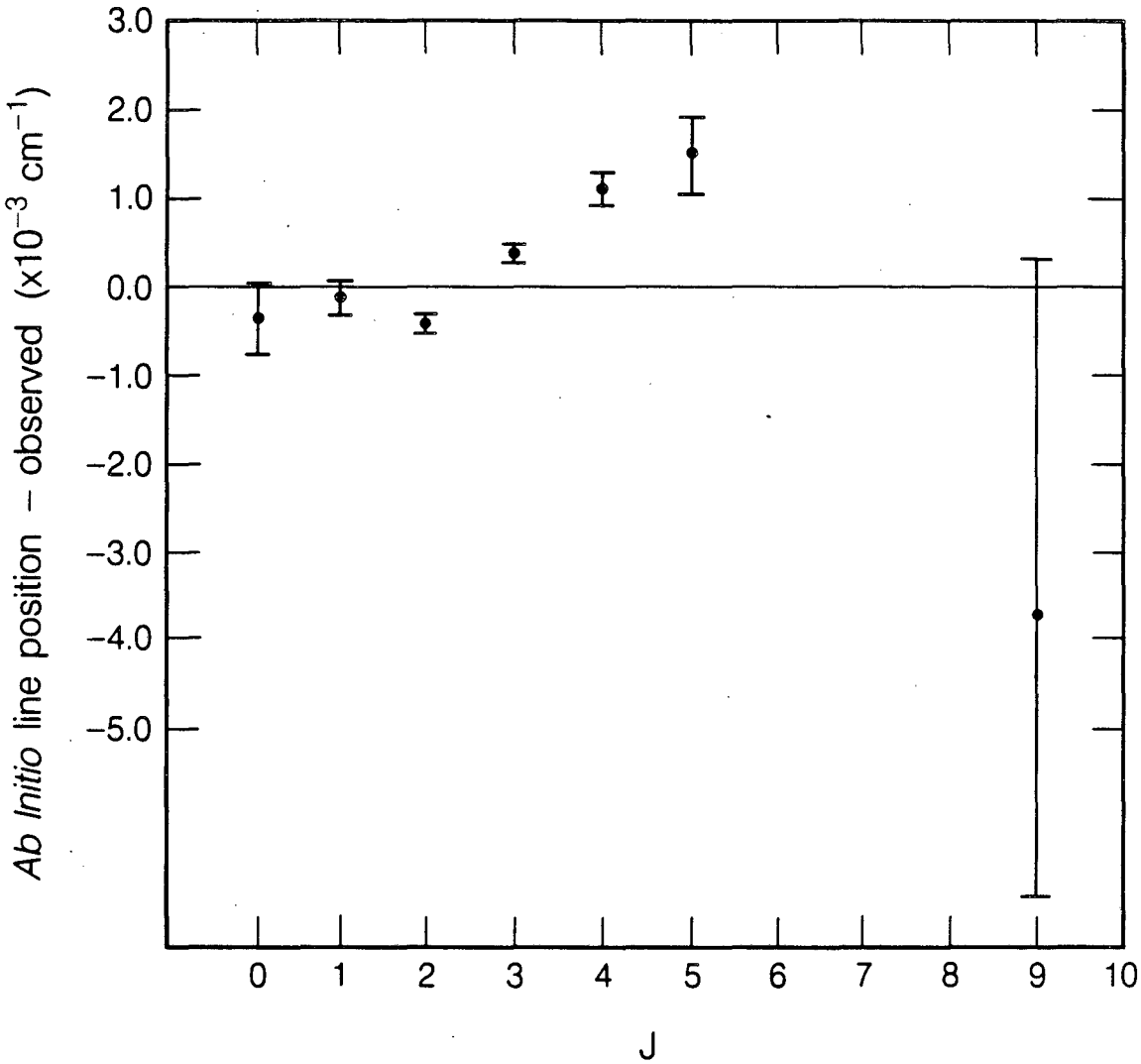

XBL 8511-12200 A

This report was done with support from the Department of Energy. Any conclusions or opinions expressed in this report represent solely those of the author(s) and not necessarily those of The Regents of the University of California, the Lawrence Berkeley Laboratory or the Department of Energy.

Reference to a company or product name does not imply approval or recommendation of the product by the University of California or the U.S. Department of Energy to the exclusion of others that may be suitable.

LAWRENCE BERKELEY LABORATORY
TECHNICAL INFORMATION DEPARTMENT
UNIVERSITY OF CALIFORNIA
BERKELEY, CALIFORNIA 94720