UC-32
LBL-20939
Preprint c.1

Lawrence Berkeley Laboratory

UNIVERSITY OF CALIFORNIA

Physics Division

RECEIVED
LAWRENCE
BERKELEY LABORATORY

APR 25 1986

LIBRARY AND
DOCUMENTS SECTION

Mathematics Department

To be submitted for publication

ON COMPUTING INV BLOCK PRECONDITIONINGS FOR THE CONJUGATE GRADIENT METHOD

P. Concus and G. Meurant

January 1986

For Reference

Not to be taken from this room

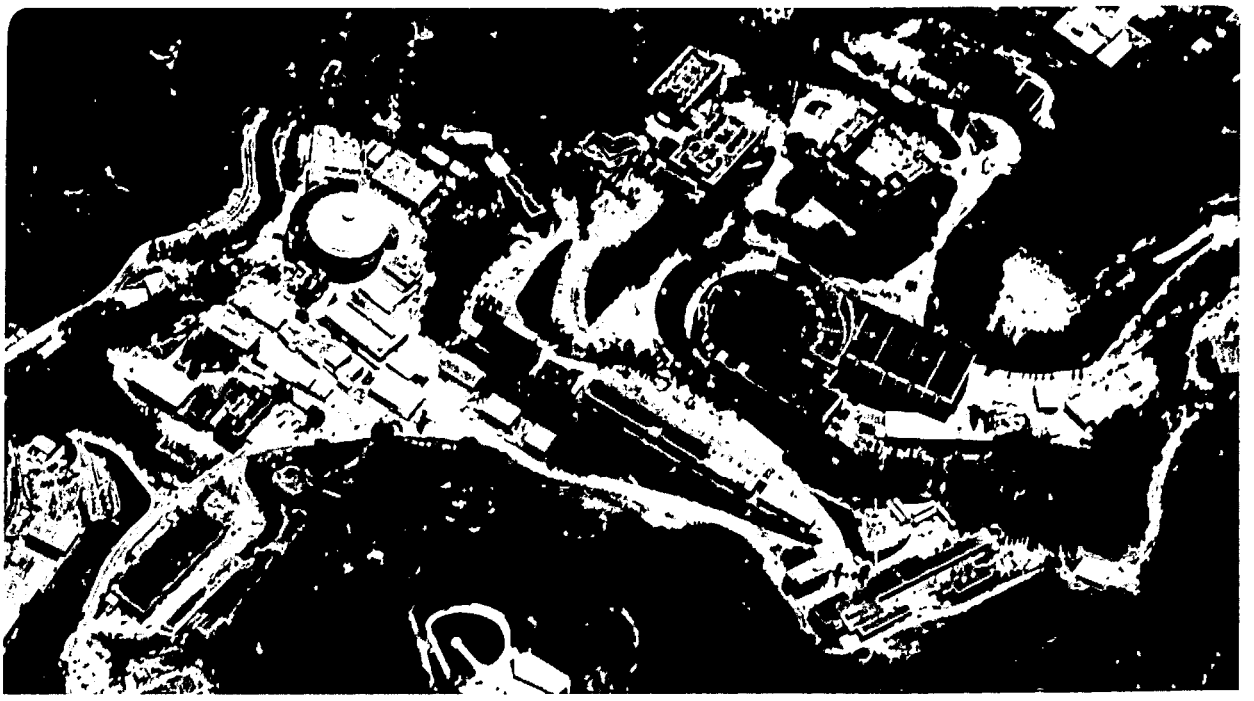

Prepared for the U.S. Department of Energy under Contract DE-AC03-76SF00098

LBL-20939 c.1

DISCLAIMER

This document was prepared as an account of work sponsored by the United States Government. While this document is believed to contain correct information, neither the United States Government nor any agency thereof, nor the Regents of the University of California, nor any of their employees, makes any warranty, express or implied, or assumes any legal responsibility for the accuracy, completeness, or usefulness of any information, apparatus, product, or process disclosed, or represents that its use would not infringe privately owned rights. Reference herein to any specific commercial product, process, or service by its trade name, trademark, manufacturer, or otherwise, does not necessarily constitute or imply its endorsement, recommendation, or favoring by the United States Government or any agency thereof, or the Regents of the University of California. The views and opinions of authors expressed herein do not necessarily state or reflect those of the United States Government or any agency thereof or the Regents of the University of California.

LBL-20939

ON COMPUTING *INV* BLOCK PRECONDITIONINGS FOR THE CONJUGATE GRADIENT METHOD

P. Concus
Lawrence Berkeley Laboratory
University of California
Berkeley, CA 94720
U.S.A.

G. Meurant
Commissariat à l'Energie Atomique
Centre d'Etudes de Limeil
94190 Villeneuve-Saint-Georges
France

January 1986

ON COMPUTING *INV* BLOCK PRECONDITIONINGS FOR THE CONJUGATE GRADIENT METHOD*

ABSTRACT

The INV(k) and MINV(k) block preconditionings for the conjugate gradient method, which for $k = 1$ require generation of selected elements of the inverses of symmetric tridiagonal matrices, are considered. Generalizing the tridiagonal case, explicit expressions for the inverse elements of a symmetric pentadiagonal matrix in terms of Green's matrix of rank two are given and found to be seriously ill-conditioned. An alternative computational algorithm for the inverse elements is used for comparing the $k = 1$ and $k = 2$ preconditionings on some discretized elliptic partial differential equation test problems in two dimensions.

Key words. conjugate gradient method, elliptic partial differential equations, incomplete factorization, iterative methods, preconditioning, sparse matrices

*Presented by the first author at the Joint U.S.-Scandinavian Symposium on Scientific Computing and Mathematical Modeling, January 1985, in honor of Germund Dahlquist on the occasion of his 60th birthday. This work was supported in part by the Applied Mathematical Sciences subprogram of the Office of Energy Research, U.S. Department of Energy under contract DE-AC03-76SF00098.

1. Introduction. In a recent paper, block incomplete Cholesky factorization was investigated as a preconditioning for the conjugate gradient method [5]. Several variants were introduced, of which the preconditioning INV(k) (and its modified form MINV(k)) gave particularly encouraging results on discretized boundary-value test problems for some self-adjoint, two-dimensional, linear elliptic partial differential equations. If the approximating linear system has coefficients that form a positive-definite, symmetric, diagonally-dominant M-matrix, which is the generic model case, then carrying out of the incomplete factorization and subsequent convergence of the conjugate gradient iteration can be guaranteed.

In [5] detailed investigation of the preconditionings INV(k) and MINV(k) were limited to the case $k = 1$, corresponding to keeping only the principal tridiagonal portion of inverses of tridiagonal matrices arising in the course of the incomplete decomposition. This case possesses a special attraction because the inverse elements of the tridiagonal matrices can be expressed explicitly in a simple manner as the outer product of two vectors.

Here we consider extension to the case k greater than one and corresponding matrices of larger bandwidth. The analogous expression for the inverse elements of pentadiagonal matrices arising for $k = 2$ is shown to have serious shortcomings, however, for numerical computation. An alternative computational procedure for building up the principal diagonals of the inverse is found preferable. Results of numerical experiments are given to illustrate the relative efficiency of the $k = 1$ and $k = 2$ preconditionings.

2. Incomplete block Cholesky factorization. Incomplete block Cholesky preconditioning for the conjugate gradient method was introduced by R.R. Underwood [6] and is developed and investigated in [5] and elsewhere [3]. We consider solving

iteratively the symmetric, positive-definite, block-tridiagonal linear system

$$Ax = b\,, \tag{1}$$

where

$$A = \begin{bmatrix} D_1 & A_2^T & & & \\ A_2 & D_2 & A_3^T & & \\ & \ddots & \ddots & \ddots & \\ & & A_{n-1} & D_{n-1} & A_n^T \\ & & & A_n & D_n \end{bmatrix}.$$

The case of interest is the one for which the system (1) arises from the discretization of an elliptic partial differential equation boundary value problem and for which A is a diagonally dominant M-matrix. We restrict attention to the two-dimensional case corresponding to a standard five-point discretization with natural ordering and concomitant block structure, for which the diagonal blocks D_i are tridiagonal and strictly diagonally dominant and the off-diagonal blocks A_i have nonzero (i.e., negative) elements on the diagonal only.

The incomplete factorization method of [5] selects as block preconditioner for (1) the matrix M given by

$$M = (\Delta + L)\,\Delta^{-1}\,(\Delta + L^T),$$

where Δ is block diagonal with

$$\begin{aligned} \Delta_1 &= D_1 \\ \Delta_i &= D_i - A_i\,\Lambda_{i-1}\,A_i^T\,, \quad 2 \le i \le n\,. \end{aligned}$$

The matrix Λ_{i-1} is the sparse approximation chosen for Δ_{i-1}^{-1}. Using M as preconditioner, (1) is to be solved iteratively by the preconditioned conjugate gradient method

(see [5] for details).

Different choices for Λ_{i-1} give different block preconditioners M. The basic choice of interest here is the one termed INV(k) in [5], obtained by selecting for Λ_{i-1} the $2k+1$ principal main diagonals of Δ_{i-1}^{-1}. The modified form MINV(k) is obtained by altering the diagonal elements of M so that the row sums of M are equal to the corresponding row sums of A.

Although stated explicitly only for the case $k = 1$ in [5], the method of proof of Theorems 3 and 4 in [5] can be extended to include the result that also for $k > 1$ all of the matrices Δ_i generated by INV(k) and MINV(k) inherit the property of the D_i of being strictly diagonally dominant with positive diagonal elements and nonpositive off-diagonal elements. In part of what follows it is assumed as well that the block partitioning of A yields diagonal blocks D_i that are irreducible, i.e., that all elements of their sub-diagonal and super-diagonal are nonzero.

3. Explicit inverse of a band matrix. For INV(k) and MINV(k) the principal main diagonals of the inverse of the symmetric band matrices Δ_i are required. An attractive means for obtaining them, as discussed in [5], is based on results given by Asplund [1]. For the case $k = 1$ and symmetric tridiagonal matrices, his results yield that the inverse can be expressed in terms of the upper triangular part of a matrix of rank one (see also [2]):

If T is a nonsingular, symmetric, tridiagonal matrix with nonvanishing elements in the bands adjacent to the main diagonal, there holds

$$(T^{-1})_{i,j} = u_i v_j, \quad i \leq j. \tag{2}$$

The vectors u and v, which have all nonvanishing elements, can be determined by a

simple recurrence from T [2,5].

The relationship (2) is equivalent to determining the elements of T^{-1} from its first row and last column, since u and v must satisfy

$$u_1 v^T T = e_1^T, \quad v_m Tu = e_m,$$

where e_j is the jth column of the identity matrix. Denote by $q^{(j)}$ the jth column of T^{-1}; then $q^{(1)} = u_1 v$ and $q^{(m)} = v_m u$. Thus (2) becomes, using the symmetry of T^{-1},

$$(T^{-1})_{i,j} = \frac{q_1^{(j)} \; q_i^{(m)}}{q_1^{(m)}}, \quad i \leq j. \tag{3}$$

Equation (3) follows also from a general theorem of Barrett and Feinsilver [4], which yields as a special case the vanishing of the upper 2×2 minor of T^{-1}

$$T^{-1}\begin{pmatrix} 1 & i \\ j & m \end{pmatrix} = \begin{vmatrix} q_1^{(j)} & q_1^{(m)} \\ q_i^{(j)} & q_i^{(m)} \end{vmatrix} = 0.$$

Of motivating interest here is the application of the results of [1] for $k > 1$. If $k = 2$, the relevant matrices arising in INV preconditioning are pentadiagonal, for which Asplund's results yield that the inverse can be expressed in terms of a matrix of rank 2. Using the same notation as for T^{-1}, we denote the jth column of the inverse of the symmetric pentadiagonal matrix P by $q^{(j)}$,

$$Pq^{(j)} = e_j.$$

The following result analogous to (3) expresses the elements of P^{-1} in terms of its first two rows and last two columns.

THEOREM. *The $(i,j)^{th}$ element of the inverse of a symmetric, nonsingular, pentadiagonal matrix P with nonvanishing outer band elements is given by*

$$(P^{-1})_{i,j} = \frac{(q_2^{(m)}q_i^{(m-1)} - q_2^{(m-1)}q_i^{(m)})q_1^{(j)} + (q_1^{(m-1)}q_i^{(m)} - q_1^{(m)}q_i^{(m-1)})q_2^{(j)}}{q_1^{(m-1)}q_2^{(m)} - q_2^{(m)}q_2^{(m-1)}}, \quad \text{for } i \leq j. \quad (4)$$

Proof. Analogous to the tridiagonal case, the result can be obtained from Corollary 3.2 of [4], which yields as a particular case the vanishing of the 3×3 upper minor of P^{-1}

$$P^{-1}\begin{pmatrix} 1 & 2 & i \\ j & m-1 & m \end{pmatrix} = \begin{vmatrix} q_1^{(j)} & q_1^{(m-1)} & q_1^{(m)} \\ q_2^{(j)} & q_2^{(m-1)} & q_2^{(m)} \\ q_i^{(j)} & q_i^{(m-1)} & q_i^{(m)} \end{vmatrix} = 0. \qquad \square$$

Equation (4) is the explicit expression for Green's matrix for finite boundary value problems of fourth order alluded to in §2 of [2]. (Eq. (3) is the expression for Green's matrix for second order problems.) We shall point out the unsuitability of (4) for numerical computation, after first discussing the situation for the tridiagonal case.

4. Decay away from the diagonal.

4.1. Tridiagonal Case. To obtain an indication of the possible limitations for using (2) (or (3)) computationally, we discuss the decay of the elements of T^{-1} away from its main diagonal. Although a recurrence for the generation of the elements of u and v (or $q^{(m)}$ and $q^{(1)}$) can be obtained easily in terms of the elements of T [4,5], the decay can be characterized more conveniently in terms of the Cholesky factors of T, in a form that carries forward readily to matrices with larger bandwidth.

Let the Cholesky factorization of the strictly diagonally dominant tridiagonal matrix

$$T = \begin{bmatrix} a_1 & -b_1 & & & \\ -b_1 & a_2 & -b_2 & & \\ & \ddots & \ddots & \ddots & \\ & & -b_{m-2} & a_{m-1} & -b_{m-1} \\ & & & -b_{m-1} & a_m \end{bmatrix}, \quad a_i, b_i > 0 \tag{5}$$

be denoted by $T = LDL^T$, where D is diagonal and L is normalized to have unit diagonal,

$$L = \begin{bmatrix} 1 & & & & \\ -\gamma_1 & 1 & & & \\ & \ddots & \ddots & & \\ & & -\gamma_{m-1} & 1 \end{bmatrix}, \quad D = \begin{bmatrix} d_1 & & & \\ & d_2 & & \\ & & \ddots & \\ & & & d_m \end{bmatrix}.$$

The d_i and γ_i are given by

$$d_1 = a_1, \qquad d_i = a_i - \gamma_{i-1}^2 d_{i-1}, \quad i = 2, \ldots, m,$$

$$\gamma_i = \frac{b_i}{d_i}, \quad i = 1, \ldots, m-1,$$

and there holds

$$d_i > 0, \quad i = 1, \ldots, m, \qquad \gamma_i < 1, \quad i = 1, \ldots, m-1.$$

The manner in which the elements of T^{-1} decay away from the diagonal can be expressed as a product of the γ_i's. Again, denote the jth column of T^{-1} by $q^{(j)}$. One obtains from $LDL^T q^{(j)} = e_j$ and the symmetry of T^{-1} that the (upper triangular) elements of T^{-1} satisfy

$$q_m^{(m)} = \frac{1}{d_m}, \tag{6a}$$

and for $j = m, m-1, \ldots, 2,$

$$q_i^{(j)} = \gamma_i \, q_{i+1}^{(j)}, \quad i = j-1, j-2, \ldots, 1, \tag{6b}$$

$$q_{j-1}^{(j-1)} = \frac{1}{d_{j-1}} + \gamma_{j-1} q_{j-1}^{(j)}. \tag{6c}$$

From (6b) one sees that moving upward along a column the elements of $q^{(j)}$ decay by the factors γ_i, so that for the last column of T^{-1} the ratio of the smallest element $q_1^{(m)}$ to the largest $q_m^{(m)}$ is

$$\frac{q_1^{(m)}}{q_m^{(m)}} = \gamma_1 \gamma_2 \cdots \gamma_{m-1}.$$

This ratio can be very small for large m or for matrices with small γ_i (large diagonal dominance).

4.2. Pentadiagonal case. An analogous expression can be given for the decay away from the diagonal for matrices of larger bandwidth. For the positive-definite, symmetric, strictly-diagonally-dominant pentadiagonal matrix

$$P = \begin{bmatrix} a_1 & -b_1 & -c_1 & & & \\ -b_1 & a_2 & -b_2 & -c_2 & & \\ -c_1 & -b_2 & a_3 & -b_3 & -c_3 & \\ \cdot & \cdot & \cdot & \cdot & \cdot & \\ & \cdot & \cdot & \cdot & \cdot & \cdot \\ & & \cdot & \cdot & \cdot & \end{bmatrix}, \quad a_i, b_i, c_i > 0, \tag{7}$$

let the Cholesky factors be specified with the same notation as for the tridiagonal case, $P = LDL^T$ with

$$L = \begin{bmatrix} 1 & & & & & \\ -\gamma_1 & 1 & & & 0 & \\ -\delta_1 & -\gamma_2 & 1 & & & \\ & -\delta_2 & -\gamma_3 & 1 & & \\ & & \ddots & \ddots & \ddots & \\ & & & \ddots & \ddots & \ddots \end{bmatrix}, \quad D = \begin{bmatrix} d_1 & & & & \\ & d_2 & & & \\ & & \ddots & & \\ & & & \ddots & \\ & & & & d_m \end{bmatrix}.$$

The δ_i, γ_i, and d_i are given by

$$d_1 = a_1, \quad d_2 = a_2 - \gamma_1^2 d_1, \quad d_i = a_i - \gamma_{i-1}^2 d_{i-1} - \delta_{i-2}^2 d_{i-2}, \; i = 3, \ldots, m,$$

$$\gamma_1 = \frac{b_1}{d_1}, \quad \gamma_i = \frac{b_i}{d_i} + \frac{\delta_{i-1}\gamma_{i-1} d_{i-1}}{d_i}, \quad i = 2, \ldots, m,$$

and

$$\delta_i = \frac{c_i}{d_i}, \quad i = 1, \ldots, m-1.$$

There holds

$$d_i > 0, \quad i = 1, \ldots, m,$$

and

$$\gamma_i > 0, \quad \delta_i > 0, \quad \gamma_i + \delta_i < 1, \quad i = 1, \ldots, m-1.$$

As before, let the jth column of the inverse of P be denoted by $q^{(j)}$; then the (upper triangular) elements of P^{-1} satisfy the recurrence

$$\begin{aligned} q_m^{(m)} &= \frac{1}{d_m}, \\ q_{m-1}^{(m)} &= \gamma_{m-1} q_m^{(m)}, \\ q_{m-1}^{(m-1)} &= \frac{1}{d_{m-1}} + \gamma_{m-1} q_{m-1}^{(m)}, \end{aligned} \tag{8a}$$

and for $j = m-1, m-2, \ldots, 2,$

$$q_i^{(j)} = \gamma_i \; q_{i+1}^{(j)} + \delta_i \; q_{i+2}^{(j)} \; , \qquad i = j-1, j-2 \, , \ldots , \; 1, \tag{8b}$$

$$q_{j-1}^{(j-1)} = \frac{1}{d_{j-1}} + \gamma_{j-1} \, q_{j-1}^{(j)} + \delta_{j-1} \, q_{j-1}^{(j+1)}. \tag{8c}$$

In (8b), symmetry may be used for $i = j-1$ to obtain $q_{j+1}^{(j)}$ as the already-computed $q_j^{(j+1)}$.

The decay of elements away from the diagonal and superdiagonal is thus less simple than is (6b) for the tridiagonal case. If the γ_i and δ_i were constant, $\gamma_i = \gamma$, $\delta_i = \delta$, for all i, then the recurrence (8b) could be solved to give

$$q_i^{(j)} = \frac{1+a \; (r_-/r_+)^{j-i}}{1+a \; (r_-/r_+)^{j-i-1}} \, r_+ \, q_{i+1}^{(j)} \; , \quad i \leq j \; - 1,$$

where

$$a = \frac{r_+ - q_{j-1}^{(j)} / q_j^{(j)}}{q_{j-1}^{(j)} / q_j^{(j)} - r_-} \quad \text{and} \quad r_\pm = [\gamma \pm (\gamma^2 + 4\delta)^{1/2}]/2.$$

There holds $-1 < -1 + \gamma < r_- < 0$, $0 < \gamma < r_+ < 1$, $-1 + \gamma < r_-/r_+ < 0$. Since r_-/r_+ is negative, the elements in a column need not decay monotonically away from the diagonal, as is the case for the inverse of a tridiagonal matrix. The change would be monotonic for this example, however, taking only every other element, with the decay rate approaching r_+^2 as j increases.

4.3. Numerical example. As a numerical example for the tridiagonal case consider the tridiagonal matrix T in (5) with constant elements $a_i = 3.65$, $b_i = 1.12$, for all i. These element values approximate those appearing on the corresponding diagonals of the limiting block diagonal matrices of the complete block Cholesky decomposition for the model discrete Poisson equation with Dirichlet boundary conditions on a square with a uniform mesh. For this case, exponent underflow ($\approx$0.29 E-38) in (6) occurs in our

calculations on a VAX/VMS computer in single or double precision FORTRAN for $(T^{-1})_{1,m} = q_1^{(m)}$, if $m \geq 83$. The computation of u and v, all of whose elements must be strictly nonzero, then breaks down. Thus, for this model problem, the computation for (2) and (3) would proceed without difficulty for small or moderate size m, as in the test problems of [5]; for larger m a modification or alternative procedure would be required.

The analogous situation for the pentadiagonal case is substantially worse. For the same model Dirichlet problem, the appropriate pentadiagonal test matrix with constant bands has the outer band with elements –0.05 in addition to the same two main diagonals as for the tridiagonal case. For this matrix, the computation of the inverse elements from (4) can be extremely ill-conditioned, even for small m for which underflow of elements distant from the diagonal is not an issue. For example, for the 9×9 case the denominator of (4) is

$$q_1^{(8)} \; q_2^{(9)} - q_2^{(9)} \; q_2^{(8)} \approx \begin{vmatrix} 0.371 & 0.127 \\ 1.082 & 0.371 \end{vmatrix} \times 10^{-3} \approx -.17 \times 10^{-10}.$$

Essentially all significant digits are lost in single precision in this case on the VAX. For larger matrices even double precision does not suffice. The numerical calculations have shown that the same difficulty is present in the evaluation of the numerator of (4).

5. Numerically stable procedure. The procedure in §3, based on the mathematical results of [1], for generating the inverse of a symmetric diagonally-dominant $(2k+1)$ diagonal M-matrix, permits calculation of any element of the inverse from its top k rows and last k columns. For the tridiagonal case (3), any element is obtained explicitly, after calculating first the top row and last column of the inverse, and for the pentadiagonal case (4), any element is obtained after calculating first the top two

rows and last two columns. The resulting expressions for $(T^{-1})_{ij}$ can be derived from the vanishing of the appropriate 2×2 or 3×3 minor for the tridiagonal or pentadiagonal cases, respectively.

The procedure is attractive conceptually, as the underlying structure of the inverse is exploited to obtain any element of the inverse in terms of a few of the border elements, without intermediate calculations. Unfortunately, as examples in §4 illustrate, the procedure has computational shortcomings connected with the normalizations based on computing the entire initial rows and final columns of the inverse. As occurs elsewhere in numerical linear algebra, attractive formulations in terms of determinants, which are instructive in a mathematical context, may not be well suited to computation.

Generating the inverse instead by calculating first the principal diagonal bands, building outward from the main diagonal without recourse to elements further away, yields a numerically better behaved algorithm. This procedure is particularly preferable for INV(k) and MINV(k) preconditionings, for which only the principal diagonals of the inverse are needed and for which the ability to calculate explicitly other elements is not of importance. Such a procedure involving Cholesky factors is referred to in §3.2 of [5] for the tridiagonal case and in related forms in [3] and elsewhere. The inverse elements would be generated out to the desired k off-diagonal bands, corresponding, for example, to (6) for the tridiagonal case and (8) for the pentadiagonal case. These recurrences are computationally well conditioned and do not require that the elements of the off-diagonal bands be nonzero.

Such recurrences, organized for computational efficiency, are used to calculate the sparse approximate inverses for the preconditionings for the numerical examples discussed in §6. Note that the row sums for MINV(k) can be obtained without calculating

all inverse elements explicitly, by solving systems of sparse equations having the unmodified Δ_i 's as coefficient.

6. Test problem results. The results for solving three test problems with INV(k) and MINV(k) preconditioning are given for $k = 1,2$. The problems are from [5], where several point and block incomplete Cholesky preconditionings are investigated, including INV(1) and MINV(1). A comparison of the work per iteration and storage required for the $k = 1$ and $k = 2$ cases is given in Table 1, computed in the same way as for the preconditionings in Table 2 of [5].

TABLE 1

Work per iteration and storage. N mesh points.

Preconditioning	Floating point multiplications	Storage
INV(1), MINV(1)	18 N	2 N
INV(2), MINV(2)	22 N	3 N

The first test problem is the model Dirichlet problem on the unit square

$$-\Delta u = f \quad \text{in} \quad \Omega = (0,1) \times (0,1),$$

$$u = 0 \quad \text{or} \quad \partial\Omega.$$

The standard five-point discretization is used on a square mesh with a total of N = 2500 unknown mesh values and with natural ordering to obtain the corresponding discrete problem of the form (1), where x is the vector of the unknown u mesh values $\{u(\xi_i, \eta_j)\}$. The right hand side is chosen to correspond to the solution $u(\xi_i, \eta_j) = \xi_i(1-\xi_i)\eta_j(1-\eta_j)\exp(\xi_i \eta_j)$ at the point (ξ_i, η_j). The initial x is set

equal to random elements in [-1,1]. The convergence criterion used for stopping the iteration is $\|r^k\|_\infty/\|r^0\|_\infty \leq 10^{-6}$, where $r^k = b - Ax^k$ is the residual at the kth iteration and r^0 is the initial residual.

The second test problem is to solve

$$-\operatorname{div}(\lambda \nabla u) = f \quad \text{in} \quad \Omega = (0,1)\times(0,1),$$
$$u = 0 \quad \text{on} \quad \partial\Omega,$$

for the domain and discontinuous λ depicted in Fig. 1. Again, a standard five-point discretization is used and also the same discrete solution, initial approximation, mesh size, and stopping criteria as for the first problem.

The third test problem is to solve [7]

$$-\frac{\partial}{\partial \xi_1}\left(\lambda_1 \frac{\partial u}{\partial \xi_1}\right) - \frac{\partial}{\partial \xi_2}\left(\lambda_2 \frac{\partial u}{\partial \xi_2}\right) + \sigma u = 0 \quad \text{in} \quad \Omega = (0,2.1) \times (0,2.1),$$
$$\frac{\partial u}{\partial n} = 0 \quad \text{on} \quad \partial\Omega,$$

for the domain and coefficients depicted in Fig. 2. A standard five-point discretization and the same initial approximation are used as for the first two test problems. For this problem a uniform mesh spacing corresponds to N = 1849 unknown mesh values is used, and the solution is $u \equiv 0$. The stopping criterion for convergence is $\|x^k\|_\infty < 10^{-6}$.

In Table 2 are given the number of iterations and the corresponding total work per point computed from Table 1 to achieve convergence for each of the problems. The calculations were carried out in single precision FORTRAN on a CRAY-1 computer. (Some of the results for INV(1) and MINV(1) in Table 1 vary slightly from those given in [5], which were obtained on a different computer with different programs and a different ran-

dom number generator.)

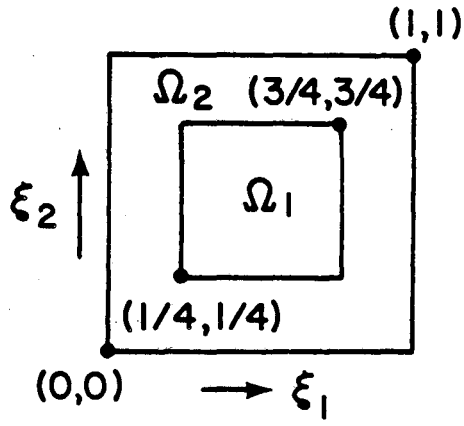

$$\lambda = \begin{cases} 1000 & , \ (\xi,\eta) \in \Omega_1 \\ 1 & , \ (\xi,\eta) \in \Omega_2 \end{cases}$$

Fig. 1. *Test problem 2*

	λ_1	λ_2	σ
Ω_1	1.	1.	0.02
Ω_2	2.	2.	0.03
Ω_3	3.	3.	0.05

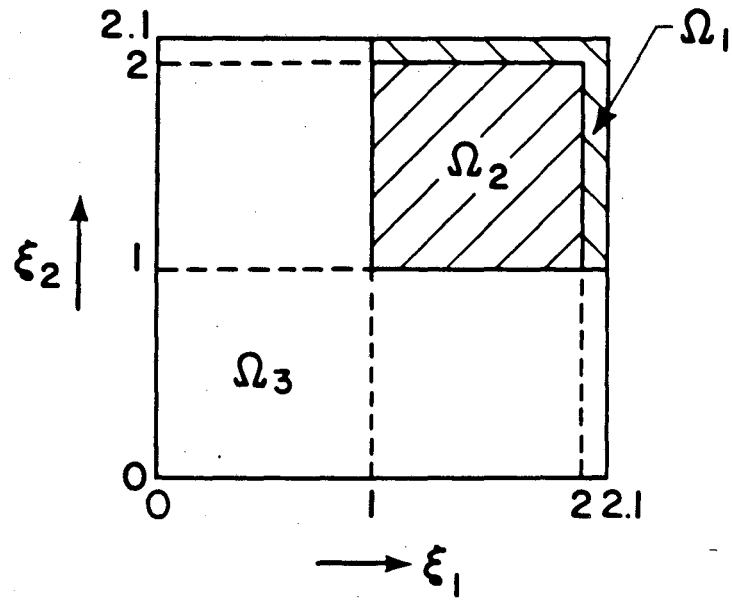

Fig. 2. *Test problem 3*

TABLE 2

Number of iterations and total work per point.

Preconditioners	Problem 1 No. Iterations	Problem 1 Work/N	Problem 2 No. Iterations	Problem 2 Work/N	Problem 3 No. Iterations	Problem 3 Work/N
INV(1)	15	270	22	396	33	594
INV(2)	11	242	17	374	24	528
MINV(1)	11	198	15	270	23	414
MINV(2)	9	198	12	264	20	440

For these test problems, the $k = 2$ preconditionings are seen to require fewer iterations to converge then do the $k = 1$ preconditionings, but not always to result in a saving of total computer operations. For larger or more difficult problems, the better inverse approximations provided by the additional bands for $k = 2$ may nevertheless be helpful.

7. Acknowledgements.

We wish to thank Gene H. Golub for a number of helpful comments and E. Gerry Puckett for carrying out some of the test problem computations.

REFERENCES

1. E. Asplund, *Inverses of matrices* $\{a_{ij}\}$ *which satisfy* $a_{ij} = 0$ *for* $j > i + p$, Math. Scand., 7 (1959), pp. 57–60.

2. S.O. Asplund, *Finite boundary value problems solved by Green's matrix,* Math. Scand., 7 (1959), pp. 49–56.

3. O. Axelsson, *A survey of preconditioned iterative methods for linear systems of algebraic equation,* BIT, 25 (1985), pp. 166–187.

4. W.W. Barrett and P.J. Feinsilver, *Inverses of banded matrices,* Linear Algebra Appl., 41 (1981), pp. 111–130.

5. P. Concus, G.H. Golub, and G. Meurant, *Block preconditioning for the conjugate gradient method,* SIAM J. Sci. Stat. Comput., 6 (1985), pp. 220–252.

6. R.R. Underwood, *An approximate factorization procedure based on the block Cholesky decomposition and its use with the conjugate gradient method,* Report NEDO-11386, General Electric Co., Nuclear Energy Div., San Jose, CA 1976.

7. R.S. Varga, *Matrix Iterative Analysis,* Prentice Hall, Englewood Cliffs, NJ, 1962.

This report was done with support from the Department of Energy. Any conclusions or opinions expressed in this report represent solely those of the author(s) and not necessarily those of The Regents of the University of California, the Lawrence Berkeley Laboratory or the Department of Energy.

Reference to a company or product name does not imply approval or recommendation of the product by the University of California or the U.S. Department of Energy to the exclusion of others that may be suitable.

LAWRENCE BERKELEY LABORATORY
TECHNICAL INFORMATION DEPARTMENT
UNIVERSITY OF CALIFORNIA
BERKELEY, CALIFORNIA 94720