LBL-21103
UC-4 c.1

Lawrence Berkeley Laboratory
UNIVERSITY OF CALIFORNIA

APPLIED SCIENCE DIVISION

RECEIVED
LAWRENCE
BERKELEY LABORATORY
1986
LIBRARY AND
DOCUMENTS SECTION

FUEL INJECTION SYSTEM FOR SHOCK TUBE STUDIES OF THE IGNITION OF PREHEATED FUELS

M.D. Forsha, R.F. Sawyer, and A.K. Oppenheim

February 1986

For Reference

Not to be taken from this room

APPLIED SCIENCE
DIVISION

LBL-21103 c.1

Prepared for the U.S. Department of Energy under Contract DE-AC03-76SF00098

DISCLAIMER

This document was prepared as an account of work sponsored by the United States Government. While this document is believed to contain correct information, neither the United States Government nor any agency thereof, nor the Regents of the University of California, nor any of their employees, makes any warranty, express or implied, or assumes any legal responsibility for the accuracy, completeness, or usefulness of any information, apparatus, product, or process disclosed, or represents that its use would not infringe privately owned rights. Reference herein to any specific commercial product, process, or service by its trade name, trademark, manufacturer, or otherwise, does not necessarily constitute or imply its endorsement, recommendation, or favoring by the United States Government or any agency thereof, or the Regents of the University of California. The views and opinions of authors expressed herein do not necessarily state or reflect those of the United States Government or any agency thereof or the Regents of the University of California.

FUEL INJECTION SYSTEM FOR SHOCK TUBE STUDIES OF THE IGNITION OF PREHEATED FUELS

M.D. Forsha, R.F. Sawyer, and A.K. Oppenheim

Department of Mechanical Engineering
University of California, Berkeley
Berkeley, CA 94720

and

Applied Science Division
Lawrence Berkeley Laboratory
University of California
Berkeley, CA 94720

This work was supported by the U.S. Army Tank and Automotive Command under Contract DAAED7-85-C-R025, and by the Director, Office of Energy Research; Office of Basic Energy Science, Engineering and Geosciences Division, and the Office of Utilization Technology of the U.S. Department of Energy under Contract No. DE-AC-03-76SF00098.

CONTENTS

Abstract	2
Background	3
Description	4
Results	9
Conclusions	16
References	16
Appendix	17

ABSTRACT

An electrically actuated fuel injection system has been developed for shock tube ignition studies of preheated fuel jets. The injection system is capable of heating the fuel to 760 K prior to injection. Injection timing may be controlled to .1 ms. The mass of fuel injected can be varied between 10 mg and 60 mg. Measurement of the mass of fuel injected is possible at all operating temperatures.

BACKGROUND

The fuel injection system was designed in conjunction with a high pressure, low temperature shock tube. The system injects a single shot of preheated fuel into the test section of the shock tube immediately behind the reflected shock. The fuel injection system must remain operational to supercritical fuel temperatures. It must also provide precise control of injection timing to take advantage of the short period of elevated temperature and pressure conditions that are available between the reflected shock and the reflected rarefaction fan.

Very few injection systems currently in existence are capable of operating at supercritical fuel temperatures. The systems that are documented utilize a standard automotive type fuel injector that is wrapped with an electric heating element (1,2). These injectors are actuated by supplying a pulse of high pressure fuel to override the seal spring and unseat the injector needle. A critical problem has been observed when these hydraulically actuated injectors are heated to high temperatures. Changes in fuel state, linkage lengths and spring stiffness are difficult to accommodate and maintain consistent injection characteristics.

The present fuel injection system avoids this problem by directly controlling the injector needle with an electric solenoid. Injection characteristics can be controlled through the signal driving the solenoid. When the solenoid is energized a sealing force is delivered to the injector needle. Injection occurs when the solenoid power is pulsed off. Thus injection duration can be controlled independent of injector fuel pressure which can be adjusted to control fuel jet penetration depth and velocity. This approach is also attractive in that it presents a convenient means of measuring the quantity of fuel injected. By sealing a known volume of fuel in the pressurized fuel line immediately prior to injection the pressure drop in the line associated with the injection event can be recorded. The quantity of fuel injected can be determined from the pressure drop and the compressibility characteristics of the fuel sealed in the line.

The disadvantages of this fuel injection system are primarily associated with the seal. The lower seal of the fuel injector is formed by a metal-to-metal seat of the needle in the injector body tip. Typical commercial usage of the injector does not require a perfect seal to exist between injection shots. Minor seepage does not significantly detract from its performance. In many research applications, though, this seepage is unacceptable. When used in the traditional mode the problem can be minimized by setting the spring popping pressure high and the static fuel pressure very low. However, the present system requires that the static pressure be maintained at the level desired for injection. This exacerbates the seepage problem and under certain conditions must be overcome by the parallel application of preset spring and variable solenoid forces.

Most commercially available electronic fuel injection equipment is intended for use in spark ignition engines. These devices operate at low pressures and their atomization characteristics would not recommend them for diesel ignition research. High pressure electronic fuel injectors are available (3). However, they are very expensive and have not been modified for high temperature operations.

DESCRIPTION

The mechanical components of the fuel injection system are shown in Figure 1 and Table 1. The system utilizes a Roosa Master Type 20761 fuel injector body, needle and sealing spring. The only modification made to the injector body was to grind off the bulb to eliminate the four separate orifices. This was done to confine the spray dispersion angle. In the present application a small spray angle is desired to minimize the portion of the spray that impacts the combustion vessel walls and optical access ports.

Several components are required to heat the fuel inside the injector body prior to injection and to attach the injector assembly to the shock tube test section. A cylindrical heater block is fitted with seven Chromalox cartridge heating elements. It also contains a chromel-alumel thermocouple which provides feedback to a Fenwal proportional temperature controller. The temperature of this heater block can be maintained at any level between 295K and 900K. The tip of the injector body slides into the heater block so that the bottom 4.5 cm of injector body will be heated when the cartridge heaters are energized. The injector is held inside the heater block with the injector holder and clip. The mated heater-injector slides into a MACOR insulation block and is held in place with a collar and slip ring. The insulation block thermally isolates the heated injector assembly from the access port of the shock tube test section. The assembly is held in the access port with a threaded cap.

A number of components were designed to attach the control solenoid to the back of the injector body and enable the system to operate at high temperatures. A housing presses onto the top of the Roosa Master injector body. The housing contains a heat exchanger which cools the upper seal of the Roosa Master and the attached solenoid. As injector temperatures exceed 600 K problems are encountered with binding of the upper seal and degradation of solenoid performance unless cooling is

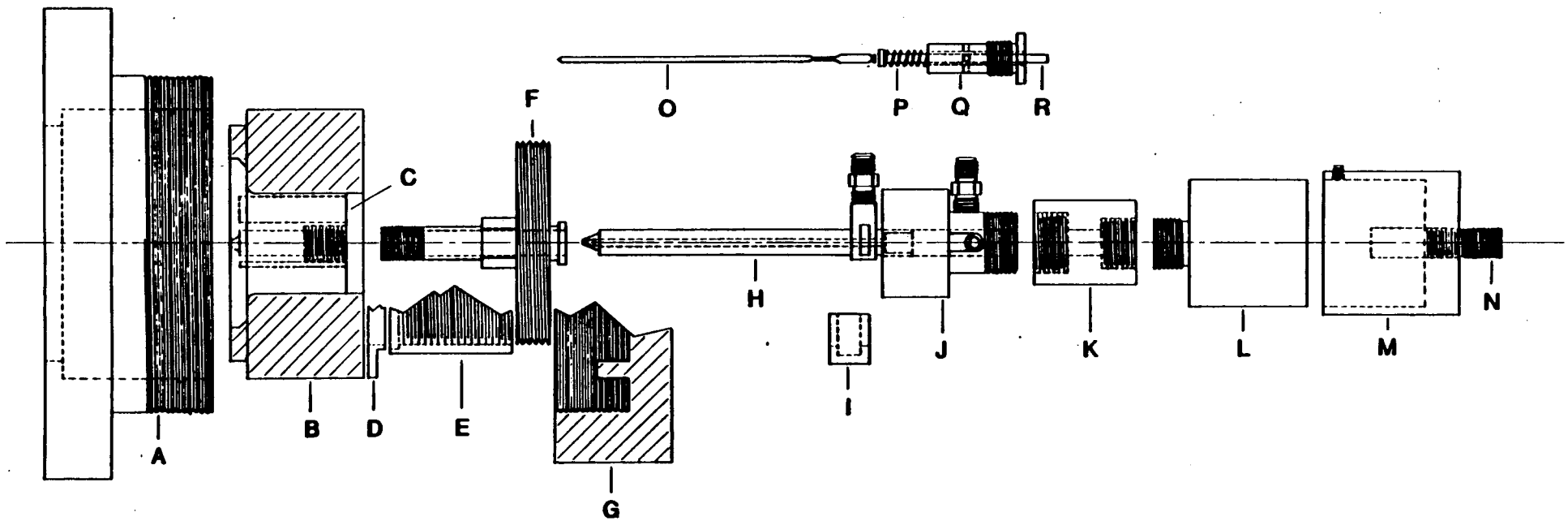

Figure 1: HEATED ELECTRONIC FUEL INJECTOR

For listing of components, see Appendix

supplied. Inside the housing an extension shaft, spring and cap can be adjusted to apply a spring sealing force to the injector needle. Under some operating conditions this spring force is needed to supplement the force applied by the solenoid to seal effectively the injector. The solenoid screws onto the injector housing so that the solenoid plunger can apply a sealing force to the injector needle through the extension shaft. A variable inductance displacement transducer is mounted on top of the solenoid. The transducer measures the motion of the rear of the solenoid core which is coupled to the injector needle. This instrumentation records the time at which the injector needle lifts and reseats.

The system utilizes an IMC Model 40SD19 DC solenoid. A solenoid was selected over other forms of electro-mechanical transducers such as a piezoelectric crystal because the solenoid core can float inside the coil to accommodate thermal expansion of the assembly linkages. Rigid transducers would require continual, precise adjustment as the temperature of the injector increased. This model solenoid is chosen for its high maximum output force. The large output force is needed due to the demanding seal requirements associated with this injection system. The high static fuel pressure levels require the application of a large sealing force to the injector needle.

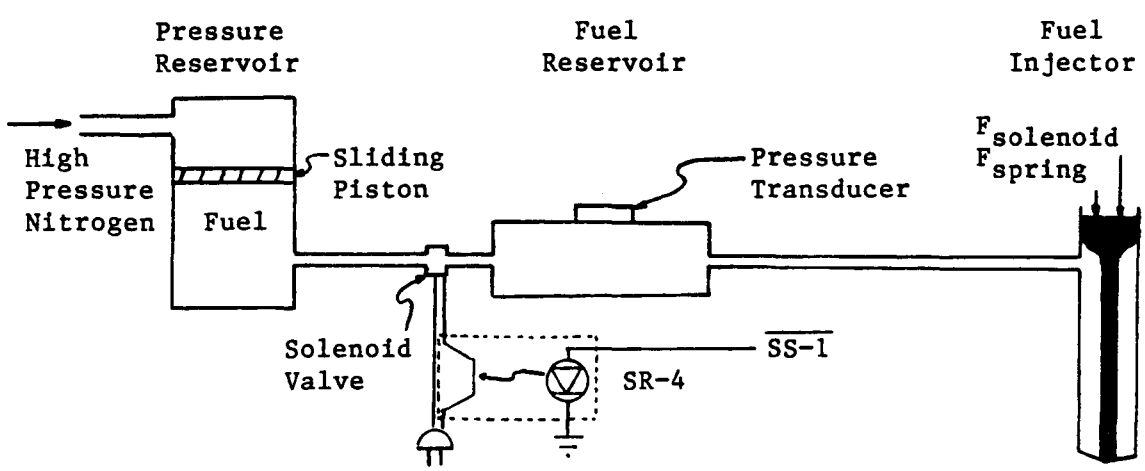

Figure 2: INJECTOR FUEL SUPPLY SYSTEM

Figure 2 shows the fuel supply system for the injector. The liquid fuel is pressurized with high pressure nitrogen through a piston type Parker hydraulic accumulator. The piston eliminates a high pressure fuel-nitrogen interface. Pressurized fuel flows through a 16 ml fuel reservoir to the injector. The fuel reservoir is instrumented with a pressure transducer. A solenoid valve is placed just upstream from the fuel reservoir. When the valve is open the entire fuel line is pressurized by the nitrogen. The valve is closed immediately prior to injection sealing the fuel reservoir and injector. During the injection a small quantity of fuel is removed from the otherwise sealed fuel line. The pressure drop in the fuel line is recorded. Since the volume of fuel in the sealed region is known, the mass of

fuel injected can be deduced from the pressure drop and the compressibility characteristics of the fuel.

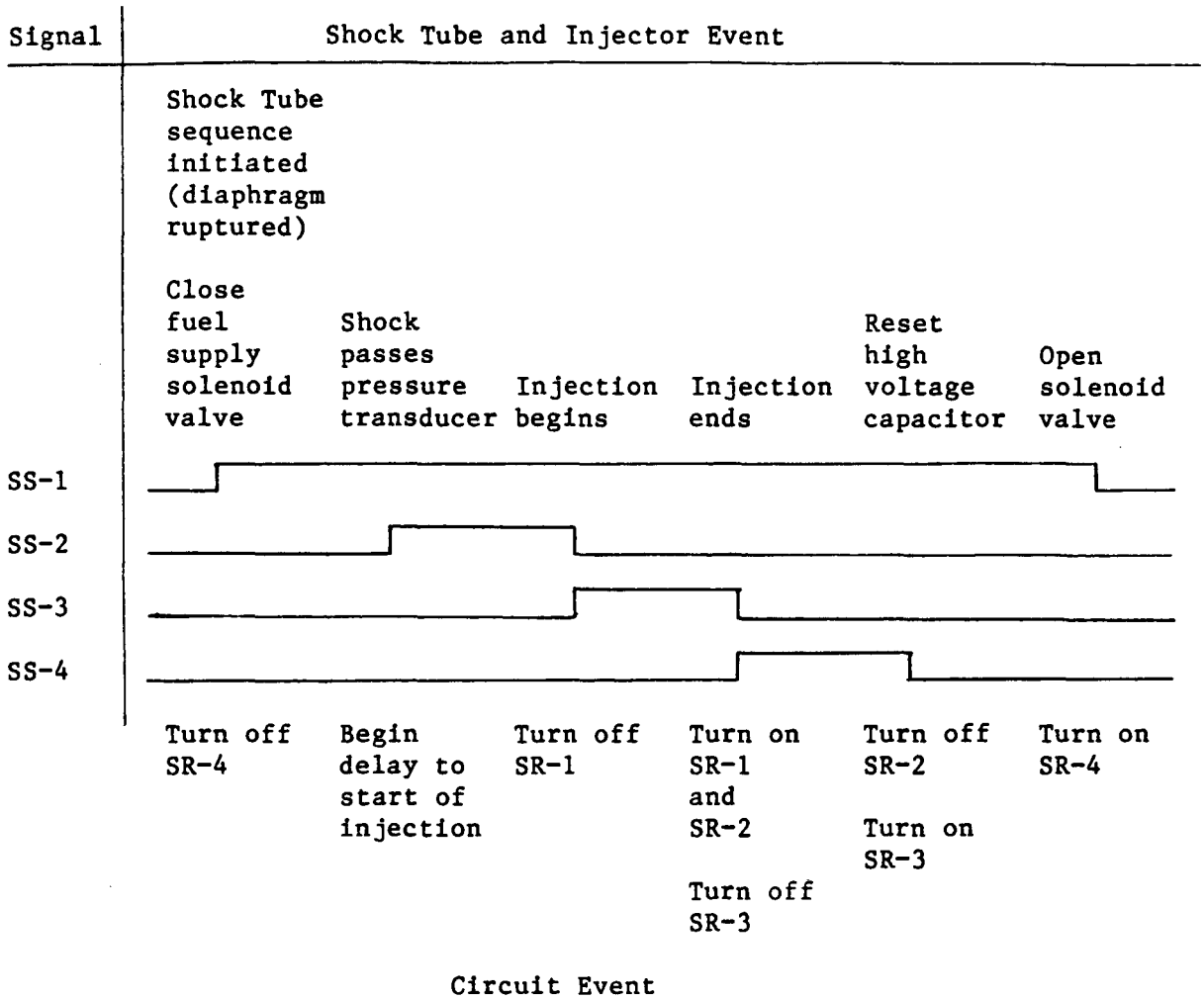

Figure 3: ELECTRONIC INJECTION SEQUENCING SIGNALS

The injection system electronics contain both timing and power switching circuits. Digital components provide sequencing signals to close the fuel supply solenoid valve and time the injection pulse to coincide with the shock reflecting from the test section. Figure 3 depicts the TTL signals that are used for system timing. The electronics must also provide a power switching circuit to drive and pulse the injector solenoid. Figure 4 diagrams the major components that condition the signal driving the injector solenoid.

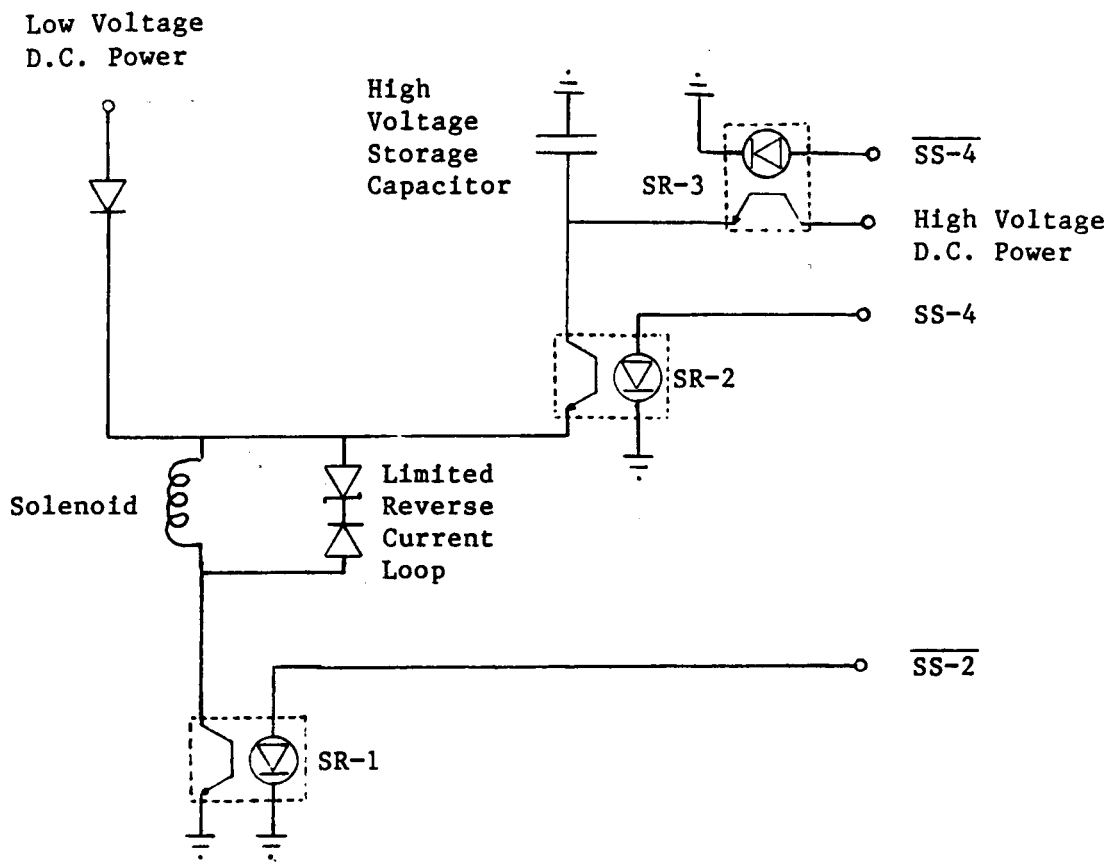

Figure 4: ELECTRONIC INJECTION SOLENOID SWITCHING CIRCUIT

The sequencing signals shown in Figure 3 are generated through a D/Q flip-flop and cascading the output from three monostable vibrators. Signal SS-1 goes high when the master shock tube trigger is actuated. At this time the shock tube diaphragm is ruptured. Simultaneously solid state relay SR-4 turns off which closes the fuel supply solenoid valve and seals the fuel reservoir and injector. A pressure transducer is positioned in the shock tube upstream from the test section. The timing of the injection sequence is started when the shock passes this transducer and produces a pressure spike. The pressure transducer signal triggers the first monostable vibrator and causes SS-2 to go high. The time between the shock passing the pressure transducer and reflecting from the test section (i.e. the delay desired prior to the start of injection) can be calculated from the initial conditions and must be preset as the pulse width of SS-2. The falling edge of SS-2 triggers the second monostable vibrator causing SS-3 to go high. This turns off solid state relay SR-1 which turns the solenoid off and starts the injection of fuel. The desired duration of the injection pulse is preset as the pulse width of SS-3. When SS-3 goes low SR-1 turns on and reenergizes the solenoid. This falling edge also triggers the third monostable vibrator which sends SS-4 high. This turns SR-2 on and SR-3 off which places a high voltage capacitor across the solenoid to generate a very large closing force. Signal SS-4 goes low after a 10 ms pulse which returns

solid state relays SR-2 and SR-3 to their pre-injection states. This enables the capacitor to recharge for the next shot. Solid state relay SR-4 turns back on and opens the fuel supply solenoid valve when the master shock tube trigger is reset and pulls SS-1 low.

When the SR-1 turns the injector solenoid off the inductance of the solenoid produces a large voltage spike at its cathode. This spike is desirable in that it speeds the collapse of the solenoid field. However, it must be limited so as not to exceed the breakdown voltage of SR-1. This is the function of the rectifier and zener diode in parallel with the solenoid. The zener diode limits the back EMF to approximately 100 V.

RESULTS

The injection system exhibits very consistent performance characteristics over a wide range of operational conditions. Fuel injection timing can be controlled to .1 ms. Fuel shot size can be varied between 10 mg and 60 mg in a very reproducible manner by changing the injection duration. The average temperature of the fuel shot can be maintained between ambient temperatures and 750 K. At moderate fuel shot sizes the temperature variation within the fuel shot is less that 5 percent of the average fuel shot temperature. The mass of fuel injected can be measured across the entire temperature spectrum with at least 10 percent accuracy.

The injection is characterized by very clean starting and stopping of the fuel flow with no significant needle bounce. Figure 5 shows injector performance for liquid dodecane fuel initially at 1000 psi and 295 K. The spring force is set to 0. The solenoid sealing voltage is set to 10 V and the storage capacitor that ends the injection is set to 24 V (corresponding to approximately 130 N and 260 N respectively). The signal driving the solenoid was pulsed off at time 0 and pulsed back on at 9.5 ms.

A delay of approximately 7 ms is observed before the injector needle begins to open. This delay is a function of both the electronic and mechanical response of the system. The delayed response of the circuit is primarily due to the slow current decay associated with the large inductance of the solenoid. The electronic time constant for the circuit pulsing off is approximately 3 ms. The injector needle will not begin to lift until the solenoid output force has decayed to less than the hydrostatic pressure force that is acting to unseat the injector needle. With the fuel pressure set at 1000 psi this corresponds to a force of 40 N or roughly one third of the initial solenoid output force. Thus electronic response times of several ms are to be expected. The rest of the delay is due to mechanical response. Static frictional forces must be overcome before any motion of the injector needle will occur. From 6 ms to 9.5 ms the injector needle displacement trace is characterized by an inertial mass being accelerated by an approximately constant force.

At 9.5 ms the storage capacitor is shorted across the solenoid to end the injection pulse. Figure 5 shows the injector needle responds almost immediately to the reenergizing of the solenoid. The electric

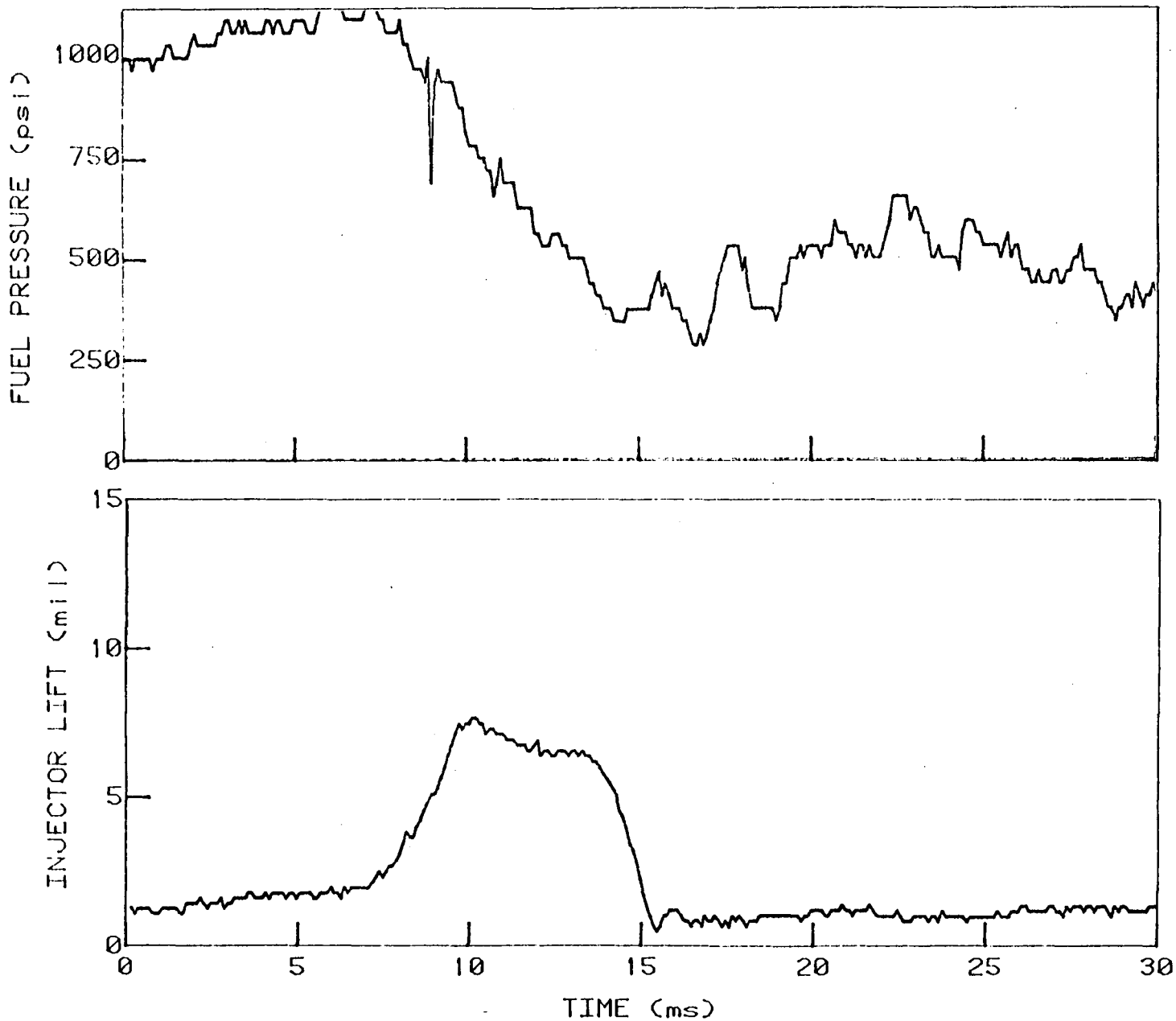

Figure 5: INJECTOR PERFORMANCE - Solenoid pulsed off 9.0 ms beginning at time 0

time constant for the circuit pulsing on is only .25 ms which accounts for the more rapid initiation of response in this direction. For the first 4 ms of injector needle travel in the closing direction the velocity is very low. The output force of the solenoid drops off quite steeply as the core is displaced from its maximum output position. Presumably this period of slow needle motion can be accounted for by this reduced output force from the solenoid. As the needle approaches the seat and the solenoid core nears its optimum output position the needle acceleration increases. The total injection duration is 8 ms. Injection durations as short as 4 ms have been obtained by pulsing the solenoid off for 8 ms.

Figure 5 also shows the fuel pressure trace associated with the injection shot. Approximately .3 sec prior to injection the solenoid valve between the fuel reservoir and the pressure reservoir is closed. Thus the injector and a 16 ml fuel reservoir are sealed at 1000 psi. During the injection a small mass of fuel is removed from the otherwise sealed system. The rest of the fuel expands approximately isothermally to occupy the original volume. This expansion is accompanied by a pressure drop in the sealed fuel volume. The expression below relates the mass of fuel injected to the static pressure drop created by the injection and the specific volume of the fuel.

$$m_i = V_s\left(\frac{1}{v(p_1)} - \frac{1}{v(p_2)}\right)$$

where:

m_i = mass of fuel injected
V_s = volume of fuel sealed in the injector and fuel reservoir
p_1 = initial pressure of the sealed fuel
p_2 = final pressure of the sealed fuel
$v(P)$ = specific volume of fuel at pressure P

The greatest fuel pressure drop recorded in Figure 5 is from from 1000 psi to about 700 psi during the injection. The only thermodynamic data available for high molecular weight fuels (4) reports specific volume to three digit precision. At these temperature and pressure ranges this precision will only yield 50 percent accuracy when computing mass of fuel injected by the above computation. In order to enhance precision the injection system was used to calibrate mass of fuel injected to pressure drop. The calibration was done at 295 K by collecting and weighing fuel shots that were produced with pressure drops between 40 and 330 psi. The results are given in Figure 6. The correlation coefficient for the linear fit is .98. If this calibration is used to calculate the change in specific volume of the fuel between the initial and final pressures the results are consistent with, but much more precise than the available thermodynamic data. It should be noted that the accuracy of this calibration is limited by the pressure drop measurement. The pressure trace in Figure 5 contains significant 60 hz and 500 hz noise. Ultimately the low frequency signal will be filtered electronically. The 500 hz signal is the result of a pressure wave in the fuel line. This noise and will be damped by reconfiguring the injector fuel supply plumbing.

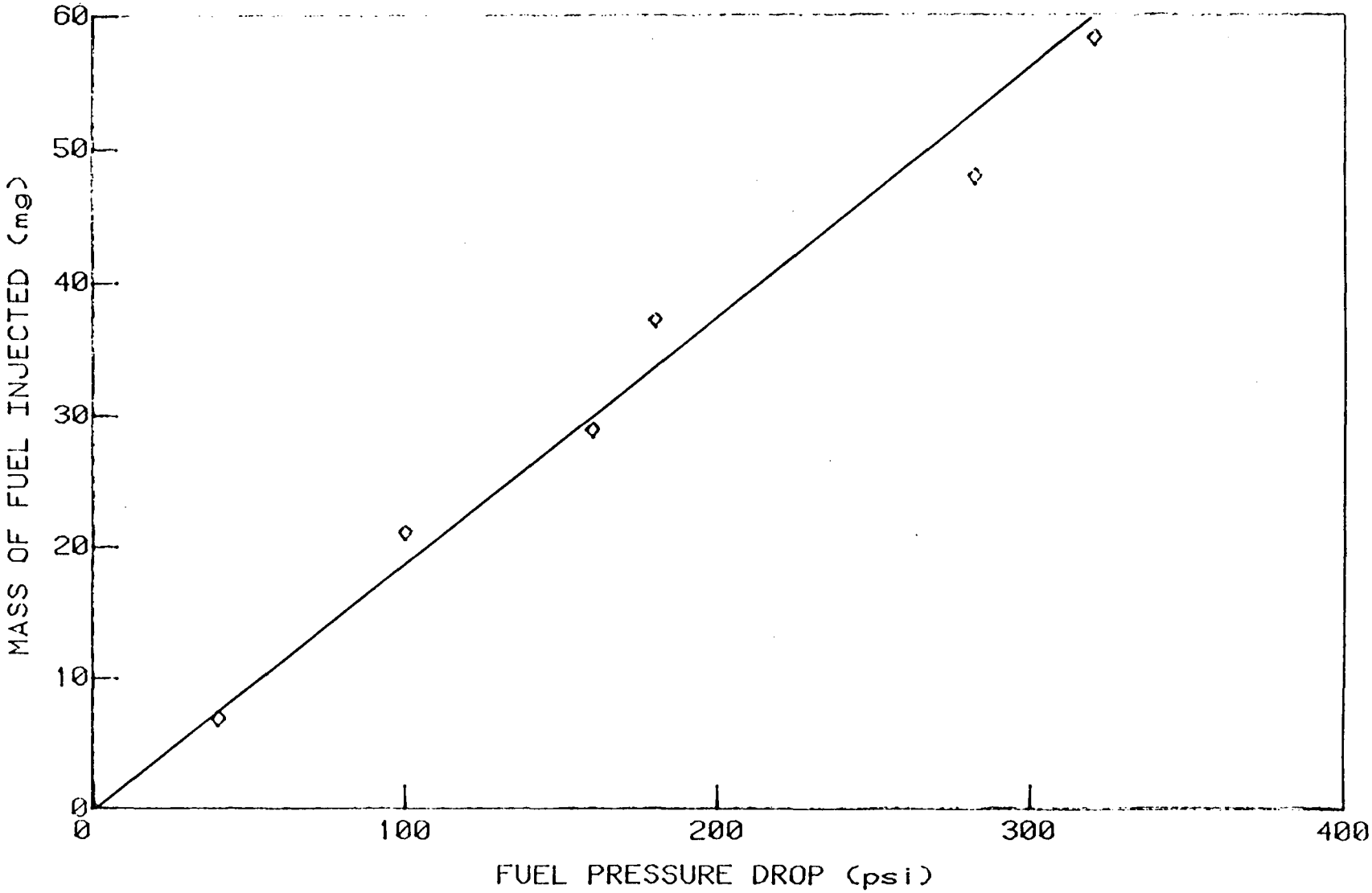

Figure 6: PRESSURE DROP FOR DIFFERENT FUEL SHOT SIZES
Sealed volume - 16 ml, Fuel - dodecane
Initial conditions - 1000 psi, 295 K

The data shown in Figure 6 is for room temperature fuel. Clearly additional considerations will be required when the tip of the fuel injector is heated. In general the relation of fuel shot size to pressure drop will be dependent on the specific volume of the fuel and hence on fuel temperature. Figure 7 shows the fuel temperature profile within the injector body for various injector heater block temperatures. The minimal clearance between the injector body and the needle did not permit the insertion of a thermocouple into an operational injector. The data were taken by welding the injector tip sealed, inserting a thermocouple probe to various depths and allowing the heated injector and fuel to come to thermal equilibrium. The probe was approximately the same diameter as the injector needle so the fuel distribution within the injector body should be comparable to the actual injector conditions. The fuel was pressurized to 1000 psi.

In Figure 8 specific volume profiles are displayed for the highest temperature data of Figure 7. The specific volume is plotted against a normalized length scale that would exist if the entire fuel passage had a uniform 1 cm^2 cross section and the temperature distribution over the volume was preserved. The specific volume is displayed for 1000 psi and 500 psi. This represents the greatest effect that fuel heating will have on the average specific volume of the sealed fuel volume. It can be seen that the region of high temperature represents such a small fraction of the overall sealed fuel volume that the change in the average specific volume difference between 1000 psi and 500 psi is within 2 percent of the difference at room temperature. Hence the room temperature relation obtained between pressure drop and fuel shot size should still provide at least 10 percent accuracy when used at high temperatures.

Figure 7 also demonstrates that the temperature profiles in the vicinity of the injector tip are fairly flat so that the shot of fuel should have a reasonably uniform temperature distribution. At 760 K a 50 mg fuel shot would occupy the first 1.5 in of the injector. For such an injection the temperature of the fuel shot would range between 670 K and 760 K. If the mass of the fuel shot were 40 mg the temperature spread would be 730 K to 760 K.

As expected it is difficult to obtain a perfect seal with this injection system. With fuel temperature at 295 K, pressure at 700 psi and the solenoid at its maximum continuous output force initially a very slow fuel seepage is detectable at the injector tip (less that one drop per hour). If the system is allowed to remain at these conditions for approximately 30 minutes the needle seat improves to the point that detectable seepage stops. At elevated temperature seepage is much more difficult to detect since the fuel vaporizes as soon as it seeps. Experience with the same injector body in a high temperature, high pressure bomb suggests that if the injector is perfectly sealed at 300 K it will maintain the seal at 900 K. If higher fuel pressures or lower solenoid forces become necessary then the sealing spring must be added to supplement the sealing force. The disadvantage to doing this is that it effectively lowers the opening force available when the solenoid pulses off and thus increases the minimum injection duration.

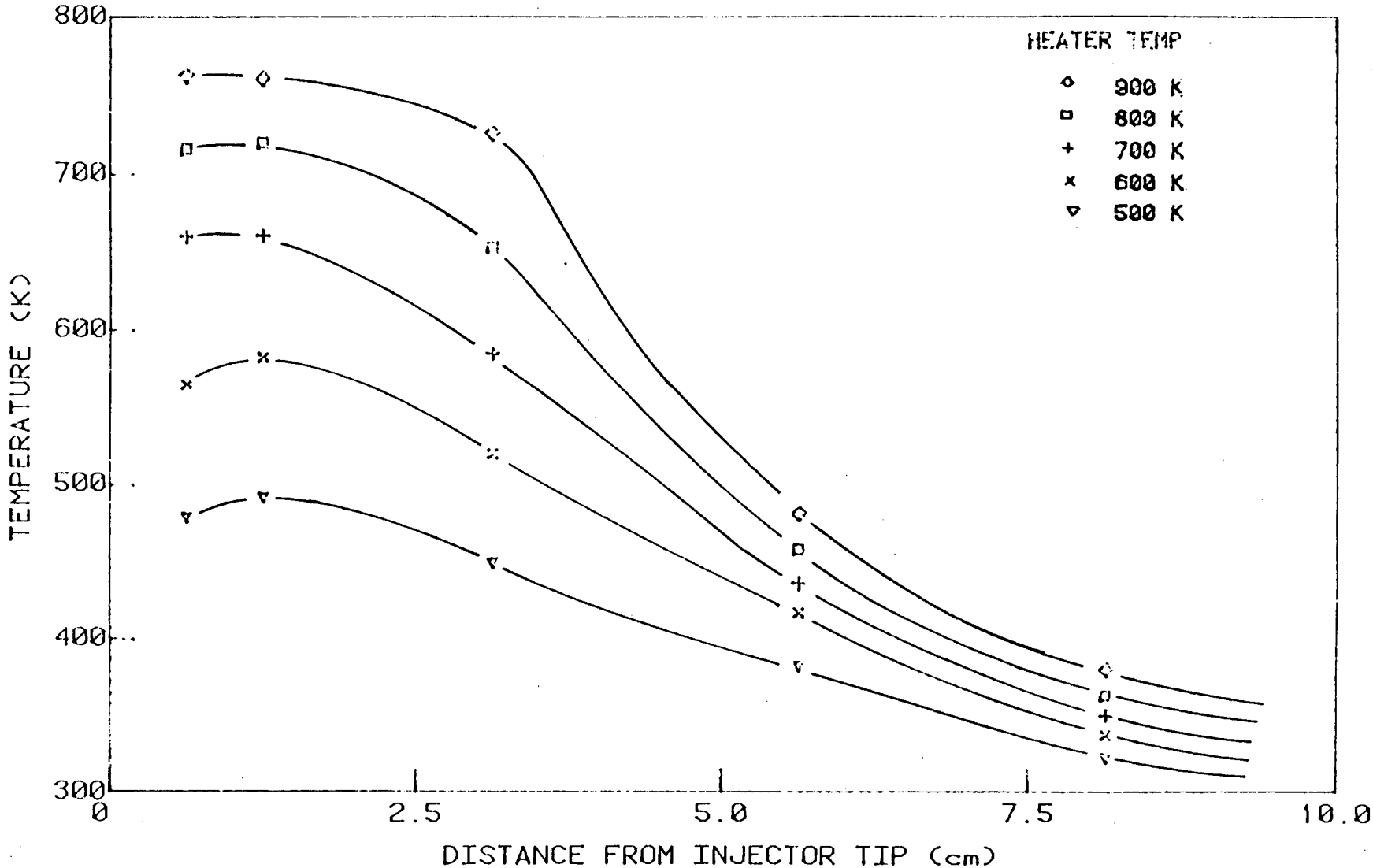

Figure 7: FUEL TEMPERATURE PROFILES FOR VARIOUS HEATER TEMERATURES

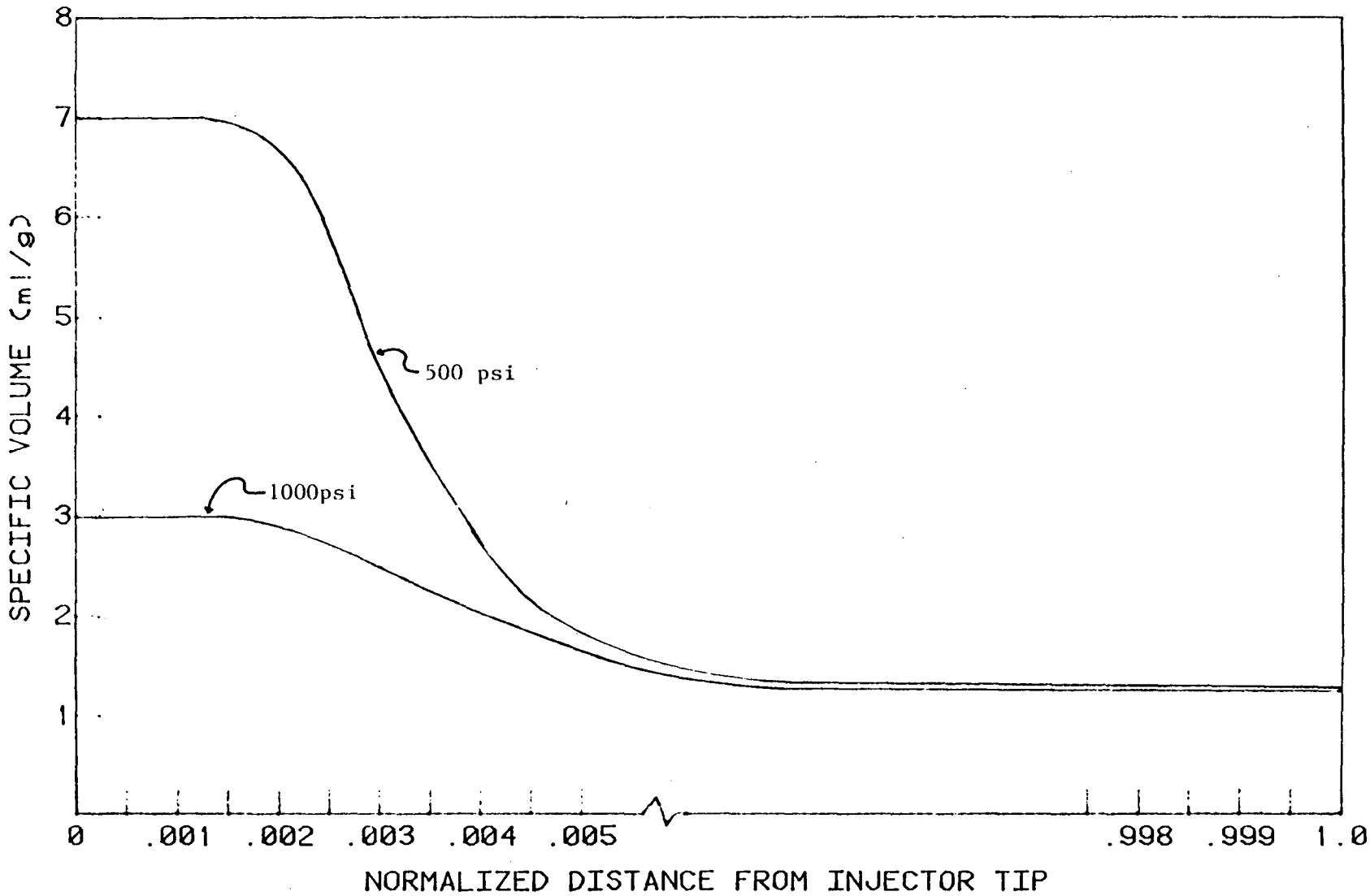

Figure 8: SPECIFIC VOLUME DISTRIBUTION OF HEATED INJECTOR FUEL
Injector heater - 900k, Injector tip fuel - 760 k

CONCLUSIONS

Little work is reported in the literature involving single shot injection of very high temperature fuels. Experience within the U.C. Berkeley combustion research group has demonstrated many of the difficulties associated with obtaining a carefully timed, reproducible single injection of high temperature fuel. By resorting to electronic rather than hydraulic actuation this injection system no longer relies upon system components that are exposed to extreme temperatures to control injector needle lift. This approach also enables a very simple and reasonably accurate means of measuring the quantity of fuel that is injected. The most significant limitation of this injector is associated with the seal. At very high fuel pressures a combination of spring and solenoid forces may be necessary if a perfect seal is required. The addition of the spring results in only minimal degradation of the injector performance. Fabrication expense of the system is minimal since major system components are commercially available.

The reported system provides consistent single injections of high temperature fuel. Shot size is controllable between 10 mg and 60 mg and can be measured to at least 10 percent accuracy. Injection timing can be set to .1 ms. Fuel temperatures as high as 760 K can be obtained.

REFERENCES

1. Parker, T.E.; Forsha, M.D.; Sawyer, R.F.; Oppenheim, A.K.: Induction Period of Self-Ignition of Fuel Sprays at High Temperatures and Elevated Pressures. Western States Section, The Combustion Institute, October 1984.

2. Cheng, W.: Effect of Fuel Temperature on Diesel Combustion. Western States Section, The Combustion Institute, October, 1984.

3. Wakman, B.: High Pressure Fuel Injection. Diesel Progress, North American, April 1983.

4. Parker, T.E.: Computation of Thermodynamic Properties of Pure Hydrocarbons. Private communication, University of California, Berkeley, January 1984.

APPENDIX: Fuel Injector Components

Index	Component	Material	Function/Comments
A	Shock Tube Test Section Access Port	Stainless Steel	
B	Insulation Block	MACOR	Thermally isolates injector heater
C	Heater Block	Brass	Shown with one of seven cartridge heaters and one of two thermocouples in place
D	Slip Ring	Stainless Steel	Secures heater within insulator block
E	Collar	Stainless Steel	
F	Injector Holder	Stainless Steel	Secures injector within heater
G	Cap	Stainless Steel	Secures injector assembly within shock tube access port
H	Roosa Master Injector Body	Stainless Steel	
I	Clip	Stainless Steel	Secures injector within injector holder
J	Injector Housing	Stainless Steel	Functions as a mount for solenoid and heat exchanger for upper injector body
K	Couple	Brass	Couples housing and solenoid
L	Solenoid		
M	Displacement Transducer Holder	Aluminum	
N	Displacement Transducer		Monitors injector needle displacement
O	Injector Needle	Stainless Steel	

P	Sealing Spring		Provides a sealing force to supplement solenoid
Q	Housing Cap	Brass	Secures needle assembly within injector body
R	Extension Shaft Spring	Stainless Steel	Transmits solenoid force to injector needle

This report was done with support from the Department of Energy. Any conclusions or opinions expressed in this report represent solely those of the author(s) and not necessarily those of The Regents of the University of California, the Lawrence Berkeley Laboratory or the Department of Energy.

Reference to a company or product name does not imply approval or recommendation of the product by the University of California or the U.S. Department of Energy to the exclusion of others that may be suitable.

LAWRENCE BERKELEY LABORATORY
TECHNICAL INFORMATION DEPARTMENT
UNIVERSITY OF CALIFORNIA
BERKELEY, CALIFORNIA 94720