LBL-21408
Preprint c.2

Lawrence Berkeley Laboratory

UNIVERSITY OF CALIFORNIA

RECEIVED
LAWRENCE
BERKELEY LABORATORY

MAY 19 1986

LIBRARY AND
DOCUMENTS SECTION

Materials & Molecular Research Division

Submitted to Journal of Chemical Physics

THE LIFETIMES FOR SPONTANEOUS EMISSION FROM THE $X^3\Sigma^-(v=1)$ AND $a^1\Delta$ STATES OF CH^-

M. Okumura, L.I. Yeh, D. Normand, and Y.T. Lee

April 1986

TWO-WEEK LOAN COPY

This is a Library Circulating Copy
which may be borrowed for two weeks.

Prepared for the U.S. Department of Energy under Contract DE-AC03-76SF00098

LBL-21408 c.2

DISCLAIMER

This document was prepared as an account of work sponsored by the United States Government. While this document is believed to contain correct information, neither the United States Government nor any agency thereof, nor the Regents of the University of California, nor any of their employees, makes any warranty, express or implied, or assumes any legal responsibility for the accuracy; completeness, or usefulness of any information, apparatus, product, or process disclosed, or represents that its use would not infringe privately owned rights. Reference herein to any specific commercial product, process, or service by its trade name, trademark, manufacturer, or otherwise, does not necessarily constitute or imply its endorsement, recommendation, or favoring by the United States Government or any agency thereof, or the Regents of the University of California. The views and opinions of authors expressed herein do not necessarily state or reflect those of the United States Government or any agency thereof or the Regents of the University of California.

THE LIFETIMES FOR SPONTANEOUS EMISSION FROM THE $X^3\Sigma^-(v=1)$ AND $a^1\Delta$ STATES OF CH^-

M. Okumura, L. I. Yeh[a], D. Normand[b], and Y. T. Lee

Materials and Molecular Research Division
Lawrence Berkeley Laboratory and
Department of Chemistry, University of California
Berkeley, California 94720 USA

ABSTRACT

The radiative decay of excited CH^- trapped in a radio frequency ion trap was measured, and the total excited state population was probed by observing the depletion of trapped CH^- caused by photodetachment at 1.16 eV, below the expected electron affinity for the ground $^3\Sigma^-$ state. The signal decayed biexponentially with time. We assigned the long lived state (lifetime 5.9+0.8,-0.6 s) as the metastable $a^1\Delta$ state previously identified in the photoelectron spectrum. The fast decay, with a lifetime of 1.75±0.15 ms, was attributed to the first excited vibrational level of the ground $^3\Sigma^-$ state, in good agreement with a theoretical result by Manz, Zilch, Rosmus and Werner. These results support the electron affinity of 1.238 eV for CH^- obtained by Kasdan, Herbst and Lineberger from photoelectron spectroscopy, and contradict the value of 0.74 eV determined by Feldmann from photodetachment spectroscopy.

---

a NSF Pre-Doctoral Fellow.
b Present address: C.E.N./Saclay, DPh.G/S.P.A.S., 91191 Gif-sur-Yvette, France.

I. INTRODUCTION

Although there has been considerable interest in the enhanced reactivity of metastable and vibrationally excited states of radicals and ions, the radiative lifetimes of such long lived states have rarely been measured. Several ab initio calculations of radiative transition probabilities for simple radicals and ions have appeared recently in the literature, with differing motivations: to aid spectroscopists in the search for infrared transitions of ions such as H_3O^+(1), to help analyze chemiluminescence measurements of product densities of species like NO^+(2), and to better understand the effects of correlation in CI calculations of molecular properties(3,4). Theorists have also begun tackling the more difficult task of calculating quantitative rates of spin-forbidden processes(5,6). There is a paucity of experimental results on absolute intensities or lifetimes to compare to the theory, particularly for weak transitions. Common problems include collisions, space charge repulsion of ions, and difficulties in creating sufficient densities of transient species.

Ion traps provide a means of relaxing ions in a collisionless environment for long times. Some lifetime measurements have been made in three dimensional radio frequency and Penning traps, including allowed electronic transitions of diatomic molecules such as HBr^+, HCl^+(7) and the spin-forbidden decays of metastable atomic ions(8). We have recently measured the radiative lifetimes of metastable $a^4\Pi_u$ O_2^+ and vibrationally excited CH_2^- in a radio frequency octupole trap(9,10). The ions are created and mass selected before being injected into the trap,

allowing the trap pressure to be kept below 5×10^{-9} torr. The ions could be trapped without collisions for times on the order of a second . The radiative decay is measured indirectly by probing the excited state population. In the case of negative ions, only ions in excited states are lost by photodetachment at photon energies below the ground state threshold. At a given trap time, we can determine the excited state population by measuring the depletion of trapped ions using sub-threshold photons.

In this paper, we report an investigation of the radiative decay of excited CH^-. An energy level diagram of CH and CH^- is given in Figure 1. Previous work has shown that there are two bound electronic states of CH^-. From the photoelectron spectrum of CH^-, Kasdan, Herbst and Lineberger(11) have found the electron affinity of the ground $X^3\Sigma^-$ state to be 1.238±0.008 eV. They have also found a second state, bound by 0.393±0.015 eV, which they assigned as metastable $a^1\Delta$ CH^-. Several other peaks have been observed and assigned, including detachment from the ground state to the previously unseen $a^4\Sigma^-$ state of the neutral, placing that state 0.742 eV above the neutral $X^2\Pi$ state.

Theoretical calculations have supported their assignments(12). In the best CI calculation, Rosmus and Meyer(13) predict an electron affinity of 1.06 eV for the $X^3\Sigma^-$ state, slightly less than the experimental value. This result follows a trend in the first row diatomic hydride electron affinities, for which the theoretical values are somewhat lower than the experimental values. The identity of the metastable state is also confirmed by theory. Using quasidegenerate many-body perturbation theory, Sun and

Freed(14) have calculated excited states and Feshbach resonances of CH^- and found a bound $^1\Delta$ excited state of CH^-. In the best calculation to date, Manz et al(15) have recently performed a MCSCF-CI calculation and found that the CH^- $a^1\Delta$ state is bound, and lies 7057 cm^{-1} above the ground state. This calculation agrees to within 200 cm^{-1} of the value obtained from the photoelectron work.

The results of the photoelectron spectrum differ markedly from an earlier photodetachment experiment of Feldmann(16). He has observed two sharp thresholds at 0.74 eV and 1.95 eV, which he assigns as detachment from the $X^3\Sigma^-$ state of the anion to CH $X^2\Pi$ and CH $a^4\Sigma^-$ respectively. The higher threshold agrees well with Kasdan's analysis, but there is no clear explanation for the discrepancy between the measurements of the origin. Electron affinities of other systems reported by Feldmann in the same paper, including C_2^-, SO^-, and SO_2^-, are all shown to be in agreement with more recent photoelectron spectroscopy results. Thus, the marked difference between the threshold values of Kasdan et al and Feldmann is puzzling.

In our experiment, we can distinguish between the two assignments by measuring the time dependence of the photodetachment signal from the trapped ions, using a photon energy of about 1 eV. This energy is below the ground state threshold of Kasdan et al, but above Feldmann's threshold. If Kasdan et al are correct, only excited state CH^- will be photodetached, and the signal will decrease to zero as the excited state radiatively decays. If Feldmann is correct, ground state CH^- will also be photodetached, and the signal will be nearly independent of time. This last result would be less

conclusive. Since $^1\Delta$ states of diatomics are very long lived(5), the excited CH^- could live much longer than the collision free trapping time of the experiment. However, recent matrix isolation work on the isoelectronic species NH has yielded a value of 3.3 s for the radiative lifetime of the $a^1\Delta$ state(17). With our apparatus, we would be able to detect a decay of this duration.

II. EXPERIMENTAL

The experiment is described briefly here and will be discussed in more detail elsewhere(9). A schematic of the apparatus is shown in Figure 2.

The ions were created in a hot cathode discharge of methane, then extracted and accelerated to 360 eV. The ion beam was mass analyzed in a 60° sector magnet to select the CH^-, and deflected 90° by an electrostatic quadrupole field to be collinear with the laser beam. The CH^- ions were then decelerated and injected into a radio frequency octupole ion trap. The ions were stored for a variable time, ranging from 1.0 ms to 5 s. A pulsed infrared or visible laser was then fired into the trap. After laser irradiation, ions were released from the opposite end of the trap, mass selected in a quadrupole mass filter (Extranuclear Laboratories, Inc.), and detected with a Ceratron electron multiplier (muRata Co.). Pulse counting techniques were used.

In this experiment, we measured the fraction of CH^- depleted by the laser. To do this, the above sequence was repeated with the laser off to measure the total ion count at a given trap time. Pairs of cycles were repeated 10 to 100 times in a given run to signal average. The relative difference between the two cycles (laser on and laser off) gave the fractional loss of CH^- caused by photodetachment. Normalizing to the "laser off" ion count compensated for any losses that were not laser correlated, e.g. leakage from the trap. Lifetimes were measured by incrementing the trapping time under computer control.

The trap consisted of eight molybdenum rods, 50 cm in length and 0.25 cm in diameter, equally spaced on a 1.25 cm radius. Alternate rods were of opposite phase. The radio frequency voltage applied to the rods,

typically 200 V and 7 MHz, created an effective potential well transverse to the axis of the trap, along its entire length. The ions were confined inside the octupole by raising the dc potentials of the lens elements at the ends of the octupole. The ions could be collected in the trap by lowering the entrance lens voltage for 1.0 ms. The ions were released by lowering the exit lens voltage for several ms, beginning 1 ms after the laser had fired. In this arrangement, approximately half the ions escaped in the first 50 ms, but the remainder were trapped indefinitely. The laser beam was coaxial to the trap and passed completely through the machine, to prevent spurious effects caused by light striking metal surfaces.

The CH^- ions were created in a hot cathode duoplasmatron discharge of methane. The methane was ultra-high purity from Matheson, used without further trapping or purification. Experiments were run with and without a center electrode. This electrode, which helped in negative ion formation(18), was a tungsten rod 0.3 cm in diameter which ran down the middle of the source to within 0.5 cm of the anode. It made the negative ion current more stable, enhanced the excited state population, and narrowed the energy spread of the ions. The last point was important, because only ions within a narrow energy range were efficiently trapped. The source pressure was 50 to 70 mTorr, the emission current 0.5 to 2 mA, and the discharge voltage 100 to 180 V.

The resolution of the magnetic mass spectrometer was approximately $m/\Delta m=150$ or higher. Thus, there was no contamination from other masses. One potential problem was signal from $^{13}C^-$; a metastable ^1D state of C^- could have yielded time dependent photodetachment signal at the photon

energies used here. No time dependent photodetachment was observed during extensive experiments on $^{12}C^-$; therefore, we concluded that there was no contribut~~ion from~~ ^{13}~~C$^-$ to the CH$^-$ decay.~~

The experiment was performed at two laser frequencies: the 9390 cm^{-1} (1.16 eV) fundamental of a YAG laser and the 14300 cm^{-1} (1.68 eV) output of a dye laser. The YAG laser was a Q-switched Quanta-Ray Nd:YAG laser, with a pulse width of approximately 10 ns. The laser beam, which had a donut shaped transverse mode pattern, was propagated 20 m; diffraction resulted in a nominally Gaussian beam spot 0.7 cm in diameter. Typical power was 100 mJ per pulse, at a 10 Hz repetition rate. The dye laser was a Quanta-Ray PDL-1 laser with LDS 698 dye, pumped by the second harmonic of the YAG. The pulse energy was approximately 20 mJ per pulse at 10 Hz. The transverse mode pattern was irregular, resulting in poorer overlap with the trapped ions.

Precautions were necessary to eliminate systematic laser power variations with trapping time. For maximum thermal stability of the laser and nonlinear optics, we had to maintain the 10 Hz repetition rate, regardless of the trapping time. For long delays, we used two schemes for selecting the appropriate laser shot.

Dye laser pulses were selected using a shutter. Thus, in a 1 s delay, the laser fired ten times while the ions were trapped, but the shutter blocked all except the last shot. The YAG fundamental output was too intense to use the shutter. When we used the YAG laser alone, the flashlamps were fired at 10 Hz, but actual lasing was controlled by triggering the Q switch.

In both cases, the 10 Hz was synchronized with the data acquisition, so that the desired laser pulse occurred at the correct time in the data cycle, to within 50 μs or better.

II. RESULTS

The photodetachment signal at the lower photon energy, 1.16 eV (0.08 eV below the threshold observed in the photoelectron spectrum), exhibited a biexponential decay with time, as shown in Figure 3. There was a fast component, which decayed in the first several milliseconds, and a much slower component, which decayed in seconds.

To accurately measure the fast decay, we decreased the trap input time to 0.1 ms from 1 ms and scanned the trapping time from 1.0 to 9.0 ms. The decay was effectively completed after approximately 5 ms. In Figure 4, we fit the faster decay to a single exponential, after subtracting the long-lived component, and obtained a lifetime of 1.75±0.15 ms. The uncertainties are reported as one standard error.

The spatial distribution of ions in the trap reached a steady state after 2 to 3 ms. To check for systematic errors arising from variable laser/ion overlap in this time regime, we repeated the experiment with CH_2^-, reducing the laser power with a filter to prevent saturation. Because the photon energy was above threshold for detachment to both the X^3B_1 and a^1A_1 states of the neutral(19), no time dependence was expected, and none was observed.

To measure the slower decay, we trapped the ions for as long as 5 s. We fit the decay to a single exponential. The long time decay, shown in curve b of Figure 5, had the short time decay subtracted for clarity. A least squares fit to the data in Figure 5(curve b) yielded a lifetime of 5900+800,-600 ms. We again measured the photodetachment of CH_2^- over the same time range, and observed no time dependence, thus ruling out systematic errors such as drop in laser power with trapping time.

For such long times, collisional processes could become significant at pressures on the order of 10^{-9} torr. We therefore measured the photodetachment decay at three pressures: 3.0×10^{-9}, 4.6×10^{-9} and 6.5×10^{-9} torr. The decay rates were equal within our uncertainty The 5.9 s decay was not collision-induced.

In contrast, the absolute ion count (independent of the laser) did decay as a function of trapping time. We had found previously that, after the first 50 ms, strongly bound ions such as O_2^+ could be trapped for several minutes without loss (9). Any loss of weakly bound ions at longer times therefore arose from collision. The loss rate of CH^- was proportional to pressure, as shown in Figure 6, indicating that collisional destruction of the CH^- was occurring. At 3.0×10^{-9} torr, the collisional lifetime was 29 s, five times longer than the lifetime of the laser-induced signal. There was about a factor of two systematic uncertainty in the absolute pressure measurements, because the ion gauge (Varian nude ion gauge UHV-24) was calibrated for air. The background gas probably consisted of mainly H_2 and CO, the gases typically found in stainless-steel, ultra-high vacuum chambers.

Collisional losses could be neglected as long as the loss rate was much longer than the radiative decay. Furthermore, because the photodetachment signal was measured as the fraction depleted by the laser, trapping and collisional losses were exactly compensated if the excited and ground states had the same non-radiative loss rates. Only relative differences in the collision cross section would affect our radiative lifetime measurements.

That the laser-induced signal was independent of pressure implies that the collisional decay rate of the long-lived excited state was slow compared to the radiative decay.

We measured the power dependence of the 1.16 eV photodetachment at trapping times of 1.0, 25, and 100 ms. The power dependence at 25 ms and 100 ms were identical, so only the 25 ms results are shown in Figure 7. As seen in Figure 7, the signal at 25 ms was completely saturated at full power (300 mJ per pulse). At 1 ms, the signal was less saturated; there was an additional absorption that was not fully saturated. The difference between the 1 ms and 25 ms curves, plotted as curve c in Figure 7, is the power dependence of the 1.75 ms state. The fast component, which would only contribute to the 1 ms signal, thus appears to have a much weaker cross section for photodetachment than the slow component, by over an order of magnitude.

Curve a of Figure 5 shows the CH^- photodetachment using the dye laser at 1.68 eV (700 nm). The signal was 40% photodetached, and did not change with trapping time up to 5 s. This high fraction of photodetachment was obtained with approximately 20 mJ per pulse, more than an order of magnitude less power than we used at 1.16 eV (1064 nm). The transition was partially saturated. In comparison, 70% of the CH_2^- ions were depleted by the 1.16 eV light(well above threshold) at saturation. The CH_2^- signal was presumably an upper limit on the fraction that could be detached, imposed by incomplete overlap of the laser beam and the trapped ions. Thus, despite incomplete saturation, we were able to detach over half the CH^- ions in the trap.

Because we were at or near saturation, we could estimate the populations for the two components. Extrapolating to zero trapping time yielded observed depletions of 8.5% and 7.8% for the slow and fast components respectively. Correcting for incomplete irradiation of the trap, which resulted in a maximum observable depletion of 70%, gave a population of 12% for the long-lived state.

For the fast component, there were two additional considerations. The transit time from the source was 0.05 ms. In addition, the trap entrance was "open" for 0.1 ms; therefore, the average additional time from source to zero trapping time was 0.1±0.05 ms. Extrapolating to true zero time (at the source) yielded a value of 8.2% for the depletion, and 12±1% for the true population. This estimate might be low, if the detachment signal was not fully saturated.

IV. DISCUSSION

A. Electron affinity of $X^3\Sigma^-$ CH^-

The biexponential decay of the photodetachment signal at 1.16 eV clearly indicates the presence of at least two excited states of CH^-. Although we did not observe the signal decay to zero, we can rule out the possibility of a weak contribution from the ground state at this energy, because we expect a large photodetachment cross section for the $X^3\Sigma^-$ state. A nonbonding p electron is detached to an outgoing s-wave, resulting in a sharp threshold. Furthermore, the Franck-Condon factors are favorable, because the ground states of the neutral and ion have similar bond lengths. The signal at this lower energy therefore arises from excited states alone. In contrast, at 1.68 eV, the signal is large and independent of time, indicating that ground state CH^- are being detached. Our results thus provide bounds for the CH^- electron affinity: 1.16 eV < E.A. < 1.68 eV, and are consistent with the analysis of the photoelectron spectrum(11). Our results contradict Feldmann's photodetachment results, in which he observed the same photodetachment cross section at the two energies studied here. We can therefore rule out Feldmann's value for a threshold of 0.74 eV, although we do not have any explanation for his results.

Only two peaks in the photoelectron spectrum fall within these limits; the larger one was assigned as the origin. The Franck-Condon factors favor a diagonal transition, and one expects a strong peak. The only uncertainty is the possibility of C^- signal, caused by the poor mass resolution of the Wien filter. Kasdan et al discount this problem, on the grounds that the C^- peak is 0.003 eV higher in energy.

B. The lifetime of vibrationally excited $X^3\Sigma^-$ CH^-

The fast decay is almost certainly an excited vibrational state of $X^3\Sigma^-$ CH^-. The weakness of the absorption is consistent with a $\Delta v \neq 0$ transition, for which the Franck-Condon factor is small. The photon energy of 1.16 eV is only 0.08 eV below the threshold, and well above the v=1 detachment threshold. The fast component has a smaller detachment cross section and therefore could not be decaying to the slow component; otherwise, the photodetachment signal would increase during the first 5 ms.

We are probably not seeing decay of v=2 or higher vibrational levels. In our experiment, we can excite both v=1 and v=2 to the continuum (see Figure 1). Both states will contribute signal; however, the second vibrational level, expected to be 5000 cm^{-1} above the ground state, probably has a small population at typical plasma temperatures (1000K to 2000K). Furthermore, the v=2 state should decay faster than the v=1 state, but we do not begin measurements for 1.1 ms after the ions have been extracted from the source. The fast decay appears to be a single exponential, with no observable curvature in the log plot over a range of more than two lifetimes. We therefore assign the 1.75 ms lifetime to the v=1 level of the $X^3\Sigma^-$ state.

The observed lifetime of 1.75 ms is fast for a vibrational state, making CH^- a very strong IR emitter, but it is similar to the v=1 lifetimes of other diatomic hydrides. Compare this value to the following 0<1 lifetimes obtained from theory or experiment: NeH^+ 1.60 ms(20), HF 5.29 ms(21), HF^+ 1.62 ms(3), OH^- 7.30ms, OH 82.0 ms, OH^+ 3.80 ms(4), and BeH^+ 64.4 ms(22).

The 1.75 ms lifetime which we measured is in reasonable agreement with a recent MCSCF-CI calculation done by Manz, Zilch, Rosmus and Werner(15). They have obtained a value of 1.96 ms, which deviates from our result by slightly more than one standard error. The calculated v=2 lifetime is 1.09 ms. They have also calculated a value for the Franck-Condon factor for the 0←1 transition of 0.018, which is consistent with our observed power dependence. Properties of anions are known to be more difficult to calculate than those of the corresponding neutrals(23). The good agreement here is encouraging, and suggests that the lifetimes of simple diatomic anions can be calculated accurately.

Based on the observed fast component population, we can estimate the v=2 population. We assume that there is a Boltzmann distribution of vibrational states, and that the observed fast component is saturated and includes both the v=1 and v=2 states (v.s.). Manz et al have calculated the following vibrational constants for the $X^3\Sigma^-$ state: w_e=2577 cm^{-1} and $w_e x_e$=80 cm^{-1}. We obtain a v=2 population of 1.5% of the total beam current. The populations relative to v=0 are 0.14 and 0.02 for v=1 and v=2 respectively, giving a vibrational temperature of 1700K. This value is typical for a hot cathode discharge. Factors which play a role in determining the vibrational temperature include source design, discharge conditions, and collisional heating during extraction.

Using the estimated populations and a scaled value of the theoretical v=2 lifetime, we have modeled the vibrational decay. When a single exponential is fit to the data derived from the model, the resulting parameters deviate by less than one standard error from the true values. These results show that neglecting the v=2 decay in the fit does not significantly change our results.

This is the first reported observation of vibrationally excited CH^-. Neither Feldmann nor Kasdan et al report a hot band in their spectra. It is quite possible that vibrationally excited CH^- were present in the photoelectron experiment. In that experiment, as in ours, the CH^- were created in a hot cathode discharge of methane. They used a Branscomb type source, while we used a duoplasmatron. Both sources had electrical and magnetic confinement of the discharge, and physically shielded the aperture in the anode. The $\Delta v=-1$ band is expected(13,15) to be 0.3 eV to the red of the threshold. The broad feature at 1.5 eV electron energy in the photoelectron spectrum, which Kasdan attributed to CH_2^-, could be reassigned as a hot band, or as a combination of the two. In addition, because of the poor Franck-Condon factors, they may not have seen hot bands if their laser power was too low.

C. The Lifetime of metastable $a^1\Delta$ CH^-

Both the photoelectron work(11) and the *ab initio* calculations(13-15) establish that the $a^1\Delta$ state is bound. This state would radiatively decay by a spin-forbidden transition to the $X^3\Sigma^-$ state. The long lifetime of the slow component is consistent with a spin-forbidden transition, so we have assigned the slow decay as the metastable $a^1\Delta$ state of CH^-. Furthermore, we expect detachment from this state to be a strong transition, for the same reasons cited for the ground state. The power dependence shows that the observed transition is indeed much stronger than the v=1 photodetachment hot band.

The $a^1\Delta$ state decays via spin orbit coupling to other electronically excited states. All of these states are Feshbach resonances, states imbedded in the ionization continuum. The nearest feasible state appears to be the $A^3\Pi$ state (see Figure 1), calculated to be 2.6 eV (21,000 cm^{-1}) above the metastable state(14). The Franck-Condon factors coupling these states appear to be unfavorable, leading one to expect a slow decay of the metastable state.

Spin forbidden transitions in diatomics often exhibit multiple exponential decays, with a strong J dependence(24). Considered in a Hund's case (a) basis, this J dependence results from different decay rates for states with different values of the spin projection quantum number Σ. The observation of a single exponential decay is consistent with the decay of a singlet state, for which there is no spin degeneracy.

Recent work on the isoelectronic species NH yield values for the radiative lifetime of the $a^1\Delta$ state that are quite similar to our results for CH^-. Esser et al have recently measured the lifetime of $a^1\Delta$ NH in rare gas matrices(17). They extrapolated their data and predicted a gas phase radiative lifetime of 3.3 s. Marian and Klotz(6), however, point out that there is a great deal of uncertainty in such extrapolations. They have performed an <u>ab initio</u> MRD-CI calculation on NH, and obtained a radiative lifetime of 1.7 s for the $a^1\Delta$ lifetime. Both of these results are qualitatively similar to our own measurements for CH^-. A calculation of the $a^1\Delta$ radiative lifetime of CH^- would be interesting but difficult, given the presence of the ionization continuum.

V. SUMMARY

There is a discrepancy in the literature concerning the experimental electron affinity of CH^-. By measuring the photodetachment from trapped CH^- ions as a function of trapping time, we have shown that at 1.16 eV, the photodetachment decays biexponentially with trapping time, and thus occurs only from excited states. At 1.68 eV, the photodetachment is independent of time, indicating that the photon energy is above the ground state threshold. Our results, which put bounds on the electron affinity (1.16 eV < E.A. < 1.68 eV), contradict Feldmann's photodetachment spectroscopy results (E.A.=0.74 eV), and support the photoelectron work of Kasdan, Herbst and Lineberger (E.A.=1.238 eV). We have found the radiative lifetime of the $X^3\Sigma^-$ (v=1) state to be 1.75 ±0.15 ms, and that of the metastable $a^1\Delta$ state to be 5.9 +0.8/-0.6 s. Assuming a Boltzmann distribution, the estimated vibrational temperature is 1700K.

ACKNOWLEDGEMENTS

We thank P. Rosmus for sending us a preprint. This work was supported by the Director, Office of Energy Research, Office of Basic Energy Sciences, Chemical Sciences Division of the U.S. Department of Energy under Contract No. DE-AC03-76SF00098.

V. REFERENCES

1. M.E. Colvin, G.P. Raine, H.F. Schaefer III, and M. Dupuis, J. Chem. Phys. 79, 1551 (1983).
2. F.P. Billingsley II, Chem. Phys. Letters 23, 160 (1973); H.J. Werner and P. Rosmus, J. Molec. Spectrosc. 96, 362 (1982).
3. H.J. Werner, P. Rosmus, W. Schatzl, and W. Meyer, J. Chem. Phys. 80, 831 (1984).
4. H.J. Werner, P. Rosmus, and E.A. Reinsch, J. Chem. Phys. 79, 905 (1983); H.J. Werner, ibid. 80, 5080 (1984).
5. R. Klotz, C.M. Marian, S.D. Peyerimhoff, B.A. Hess and R.J. Buenker, Chem. Phys. 89, 223 (1984).
6. C.M. Marian and R. Klotz, Chem. Phys. 95, 213 (1985).
7. C.C. Martner, J. Pfaff, N.H. Rosenbaum, A. O'Keefe, and R.J. Saykally, J. Chem. Phys. 78, 7073 (1983).
8. D.J. Wineland, W.M. Itano, and R.S. van Dyck, Adv. At. Mol. Phys. 19, 135 (1983); R.D. Knight, Phys. Rev Letters 48, 792 (1982); R.D. Knight and M.H. Prior, Phys. Rev. A 21, 179 (1980); R. Schneider and G. Werth, Z. Physik A 293, 103 (1979); F. Plumelle, M. Desaintfuschien, J.L. Duchene, and C. Audoin, Opt. Commun. 34, 71 (1984).
9. S.W. Bustamente, M. Okumura, D. Gerlich, L. Carlson, H.S Kwok, and Y.T. Lee, to be published; S.W. Bustamente, PhD Thesis, University of California, Berkeley (1983).
10. M. Okumura, L.I.C. Yeh, D. Normand, J.J.H. van den Biesen, S.W. Bustamente and Y.T. Lee, Tetrahedron 41, 1423 (1985).
11. A. Kasdan, E. Herbst, and W.C. Lineberger, Chem. Phys. Letters 31, 78 (1975).

12. P.E. Cade, Proc. Phys. Soc. 91, 842 (1967); P.F. Zittel and W.C. Lineberger, J. Chem. Phys. 65, 1932 (1976).

13. P. Rosmus and W. Meyer, J. Chem. Phys. 69, 2745 (1978).

14. H. Sun and K.F. Freed, J. Chem. Phys. 76, 5051 (1982).

15. U. Manz, A. Zilch, P. Rosmus, and H.-J. Werner, J. Chem. Phys. (submitted).

16. D. Feldmann, Z. Naturforsch. 25a, 621 (1970).

17. H. Esser, J. Langen and U. Schurath, Ber. Bunsenges. Physik. Chem. 87, 636 (1983).

18. W. Aberth and J.R. Peterson, Rev. Sci. Instr. 38, 745 (1967); V.P. Golubev, G.A. Nalivaiko and S.G. Tsepakin, in Proceedings of the Proton Linear Accelerator Conference (Los Alamos National Laboratory Report LA-5115, 1972) p. 356; W. Aberth, R. Scnitzer, F. Eugener and M. Anbar, in Proceedings of the Second Symposium on Ion Sources and Ion Beam Formation (Lawrence Berkely Laboratory Report LBL-3399, 1974) p. I-7.

19. T.J. Sears and P.R. Bunker, J. Chem. Phys. 79, 5265 (1983); D.G. Leopold, K.K. Murray and W.C. Lineberger, J. Chem. Phys. 81, 1048 (1984).

20. R.N. Sileo and T.A. Cool, J. Chem. Phys. 65, 117 (1976).

21. P. Rosmus and E.A. Reinsch, Z. Naturforsch. A 35, 1066 (1980).

22. F.F. Ornellas, W.C Stwalley and W.T. Zemke, J. Chem. Phys. 79, 5311 (1983).

23. T.J. Lee and H.F. Schaefer III, J. Chem. Phys. 83, 1784 (1985).

24. See for example T.C. James, J. Chem. Phys. 55, 4112 (1972).

FIGURE CAPTIONS

FIG. 1. Energy level diagram of the lowest lying states of CH^- and CH, based on the results of Kasdan, Herbst and Lineberger, Ref. 14. The vertical arrows are the transitions excited in this experiment. As indicated by the dashed arrow, a 9390 cm^{-1} photon cannot detach an electron from the ground state.

FIG. 2. Schematic of the molecular ion spectrometer.

FIG. 3. The decay of the photodetachment signal from CH^- at short times. The photon energy is 9390 cm^{-1} (1.16 eV). The curve is obtained from the fits shown in Figures 4 and 5.

FIG. 4. Log plot of the data at short times, with a long decay component subtracted. The photon energy is 9390 cm^{-1} (1.16 eV).

FIG. 5. The decay of the photodetachment signal from CH^- at long times. The photon energy in curve a) is 14300 cm^{-1} (1.68 eV). The photon energy in curve b) is 9390 cm^{-1} (1.16 eV). The short time decay has been subtracted from this curve, and would appear as a spike at t=0 s in this time scale.

FIG. 6. Decay of the trapped ions caused by collisional loss, at four pressures of background gas.

FIG. 7. The power dependence of the photodetachment signal at 9390 cm^{-1}. Curve a) is measured at 1 ms trapping time. Curve b) is measured at 25 ms trapping time. Curve c) is the difference between curves a) and b). The curves are hand-drawn through the points.

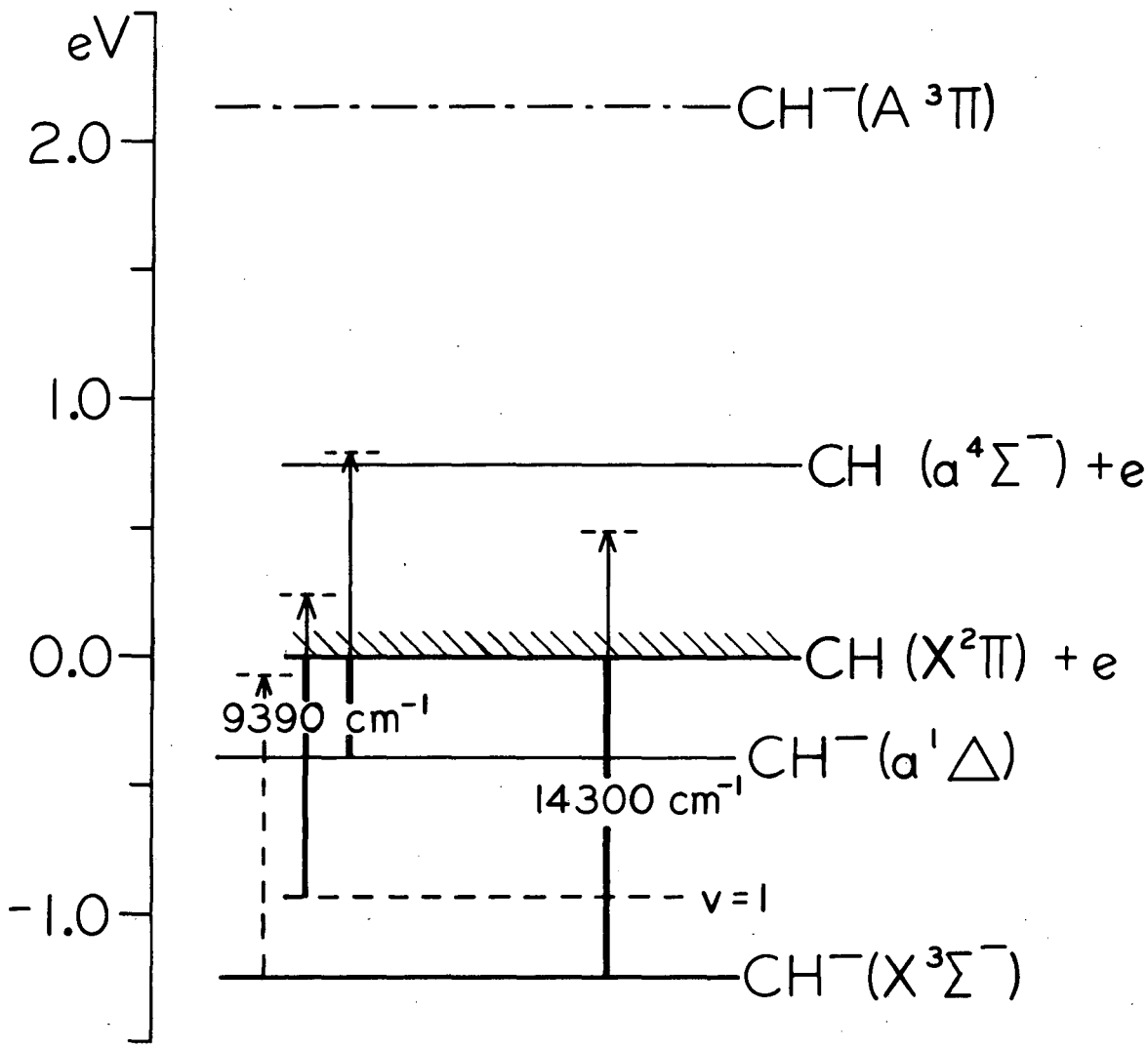

XBL 847-3076

Fig. 1

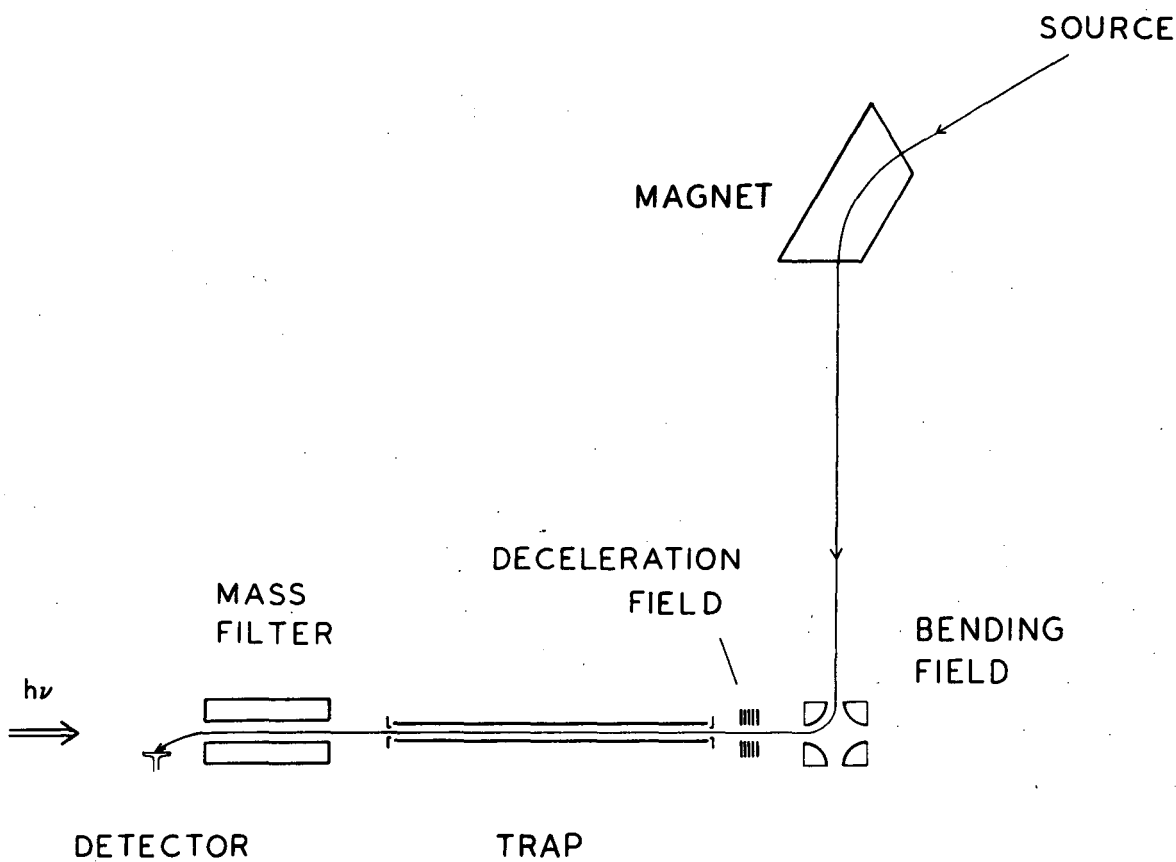

XBL 847-3011

Fig. 2

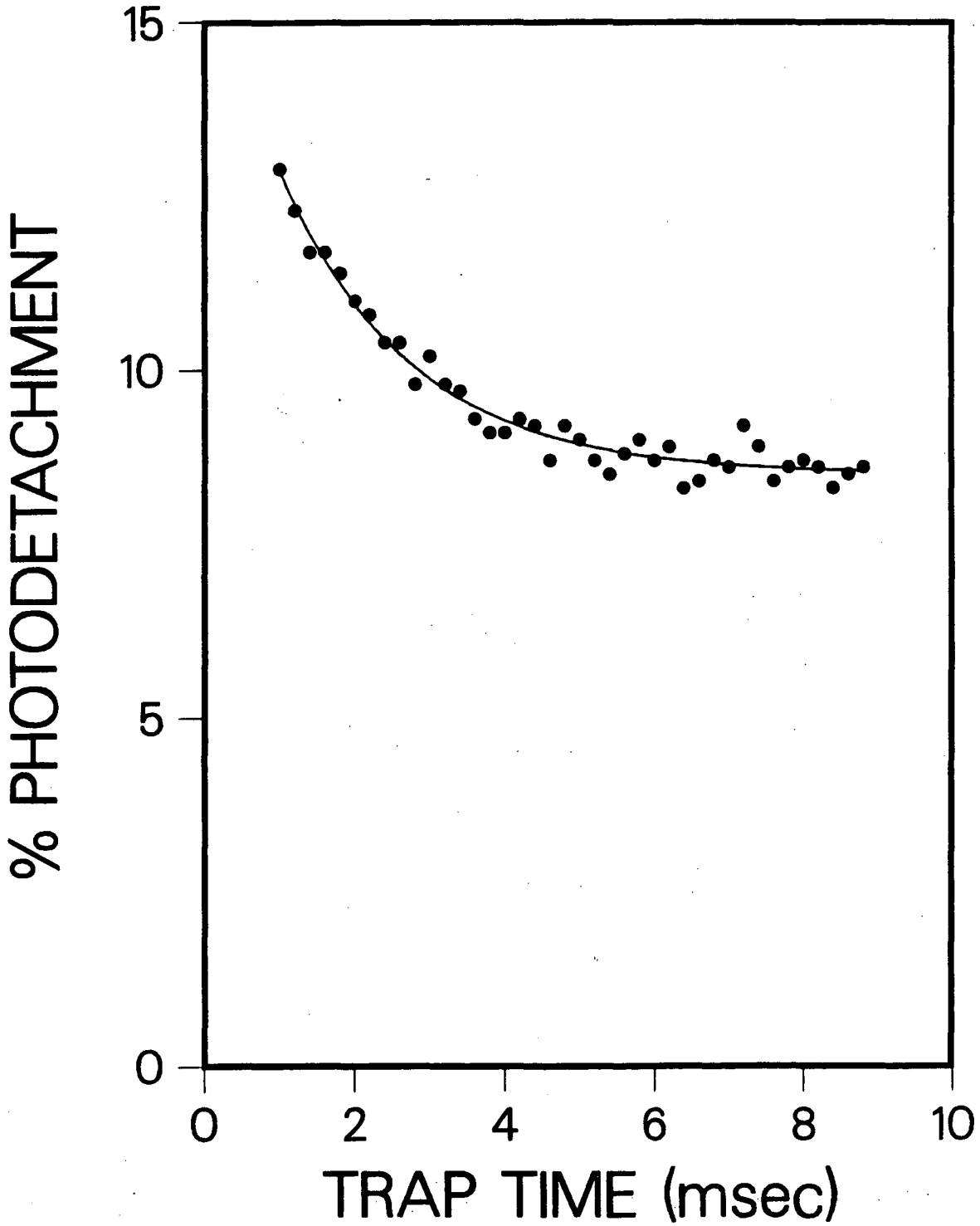

Fig. 3

XBL 848-3514

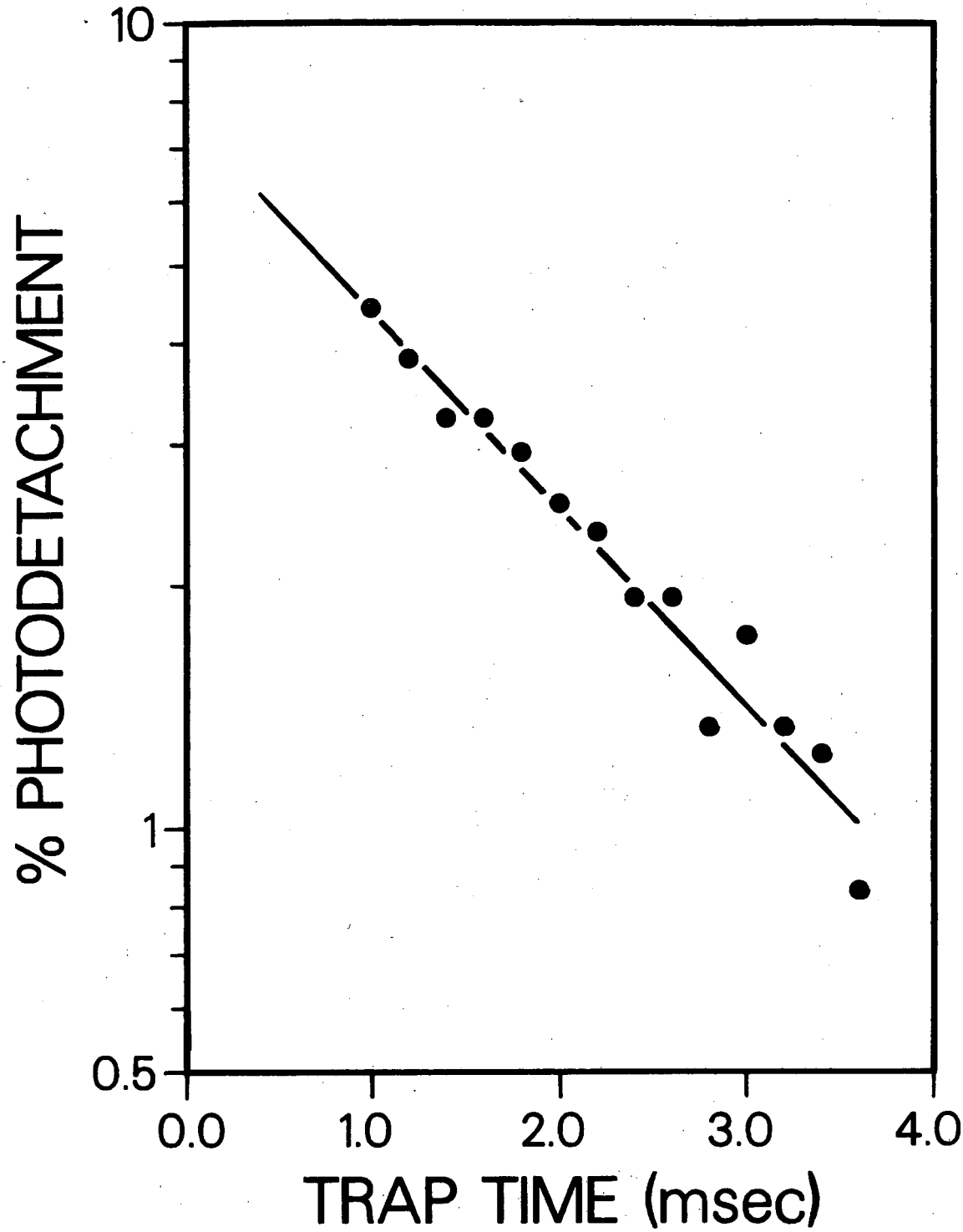

Fig. 4

XBL 847-3261

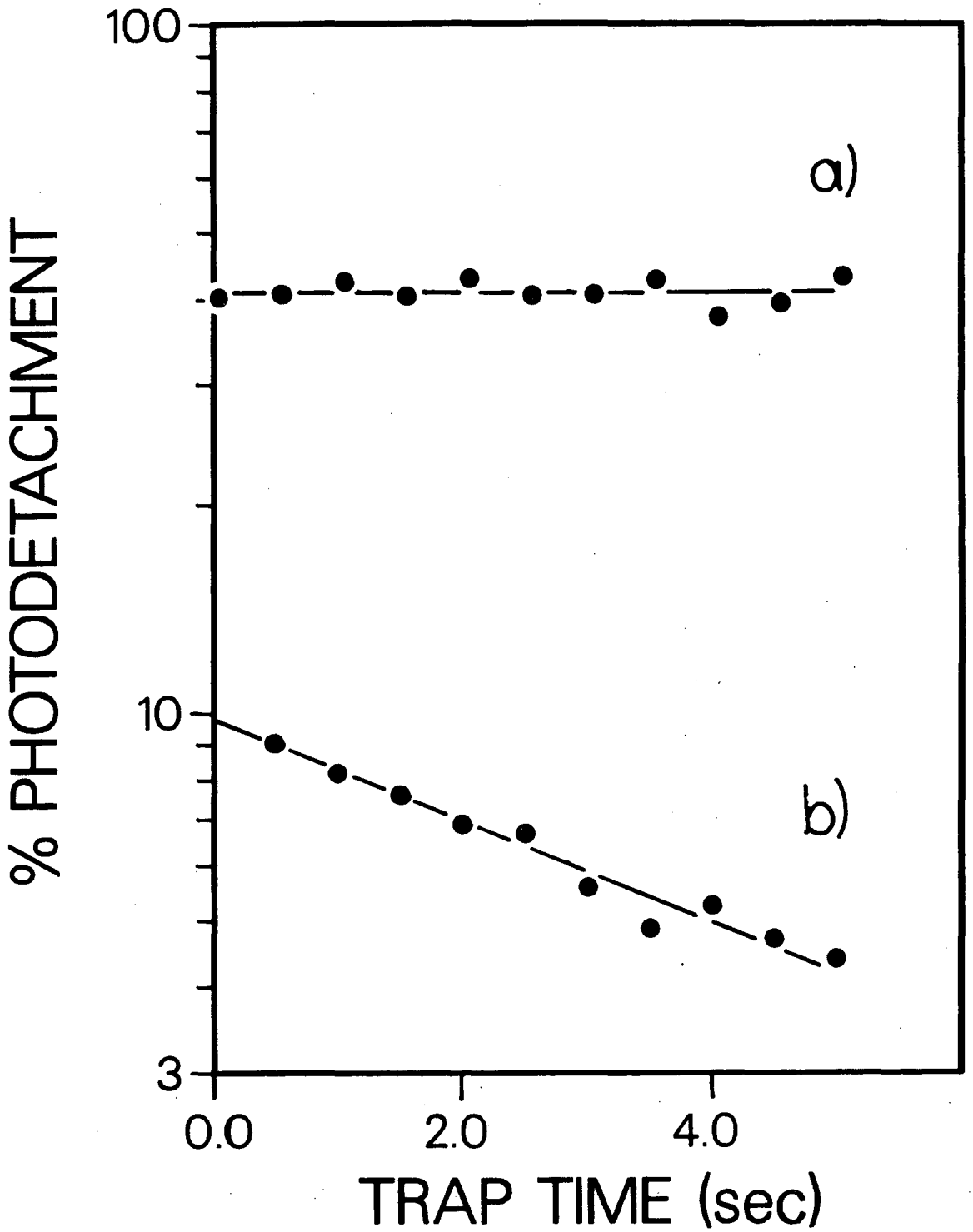

XBL 847-3262

Fig. 5

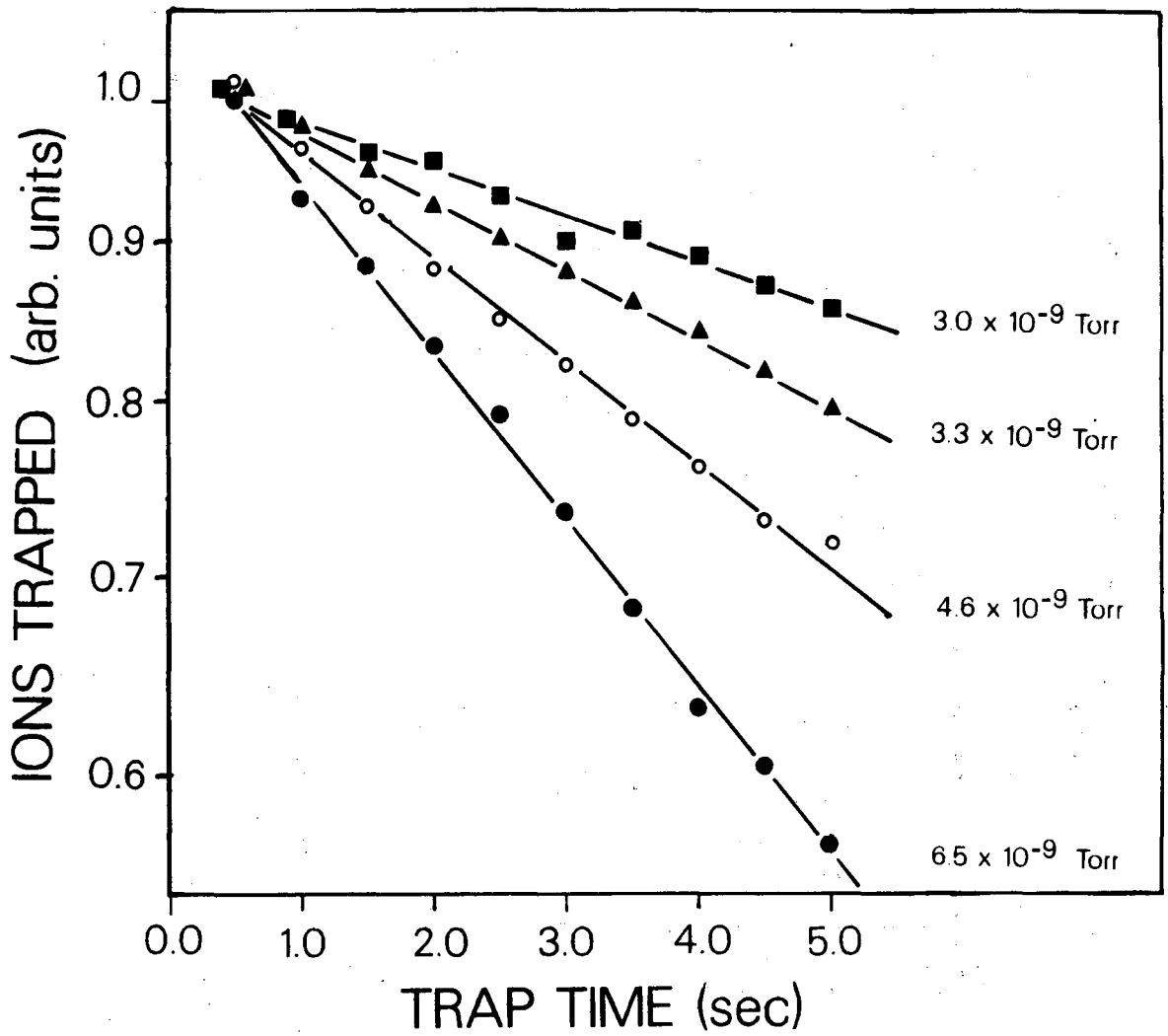

XBL 847-3259

Fig. 6

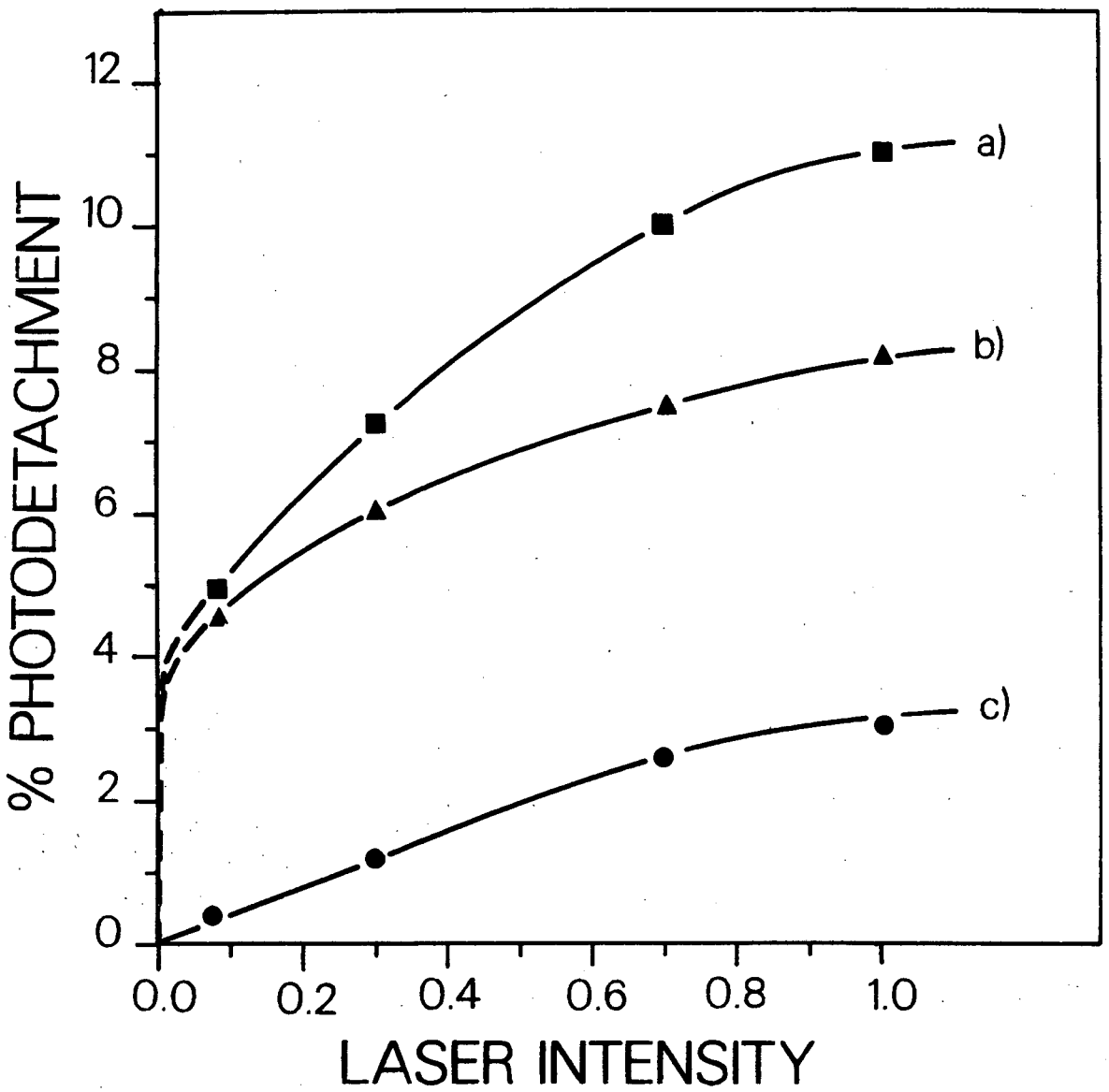

XBL 847-3260

Fig. 7

This report was done with support from the Department of Energy. Any conclusions or opinions expressed in this report represent solely those of the author(s) and not necessarily those of The Regents of the University of California, the Lawrence Berkeley Laboratory or the Department of Energy.

Reference to a company or product name does not imply approval or recommendation of the product by the University of California or the U.S. Department of Energy to the exclusion of others that may be suitable.

LAWRENCE BERKELEY LABORATORY
TECHNICAL INFORMATION DEPARTMENT
UNIVERSITY OF CALIFORNIA
BERKELEY, CALIFORNIA 94720