LBL-21495 c.2

Lawrence Berkeley Laboratory

UNIVERSITY OF CALIFORNIA

RECEIVED
LAWRENCE
BERKELEY LABORATORY
JUN 18 1986
LIBRARY AND
DOCUMENTS SECTION

EARTH SCIENCES DIVISION

To be presented at the Geothermal Resources Council
1986 Annual Meeting, Palm Springs, CA,
October 29-31, 1986

DESCRIPTION OF A HIGH TEMPERATURE DOWNHOLE FLUID SAMPLER

R. Solbau, O. Weres, L. Hansen, and B. Dudak

May 1986

TWO-WEEK LOAN COPY
This is a Library Circulating Copy
which may be borrowed for two weeks.

LBL-21495 c.2

Prepared for the U.S. Department of Energy under Contract DE-AC03-76SF00098

DISCLAIMER

This document was prepared as an account of work sponsored by the United States Government. While this document is believed to contain correct information, neither the United States Government nor any agency thereof, nor the Regents of the University of California, nor any of their employees, makes any warranty, express or implied, or assumes any legal responsibility for the accuracy, completeness, or usefulness of any information, apparatus, product, or process disclosed, or represents that its use would not infringe privately owned rights. Reference herein to any specific commercial product, process, or service by its trade name, trademark, manufacturer, or otherwise, does not necessarily constitute or imply its endorsement, recommendation, or favoring by the United States Government or any agency thereof, or the Regents of the University of California. The views and opinions of authors expressed herein do not necessarily state or reflect those of the United States Government or any agency thereof or the Regents of the University of California.

Description of a High Temperature Downhole Fluid Sampler

Ray Solbau, Oleh Weres, Leif Hansen, and Bruce Dudak

Lawrence Berkeley Laboratory
University of California
Berkeley, California 94720

Abstract

Downhole fluid samplers have been used for years with limited success in high temperature geothermal wells. This paper discusses the development and operating principles of a high temperature downhole fluid sampler, reliable at obtaining unflashed samples at temperatures of up to 350°C. The sampler was used successfully for recovering a brine sample from a depth of 10,200 ft in the Salton Sea Scientific Drilling Project well.

Introduction

Fluid samples collected at the wellhead of a producing geothermal well are a mixture of all fluids that enter the wellbore. A downhole sampler is required to furnish a fluid sample in close proximity to each producing interval and is useful for interpretating reservoir properties.

Under a contract sponsored by the Gas Research Institute (GRI), engineers and researchers at the Lawrence Berkeley Laboratory designed and fabricated a downhole fluid sampler (see Fig. 1). The sampler was intended to operate in high temperature geopressured gas wells, where corrosive fluids may be encountered. The sampler is constructed of MP35N alloy which is chemically inert to wellbore fluid. The sampler was initially designed for a maximum operating temperature of 230°C and pressures of up to 20,000 psi (Michel, ed., 1982; Weres, et al., 1984). Recent modifications have extended the temperature rating to 350°C (Table 1 lists the specifications for the upgraded sampler). The operating capability of the sampler, under the above indicated temperature rating, was verified by retrieving a bottom hole (10,200 ft) sample from the Salton Sea Scientific Drilling Project well (State 2-14) where other samplers had been run numerous times with limited success.

Operating Principle

The sampler is made up of numerous parts (see Fig. 2) and has the appearance of being very complex, but in reality the electrical and mechanical functions of the sampler mechanism are straight forward and very reliable. The sampler is of the flow-through type, that is, while the instrument is lowered down the wellbore the upper and lower valves are in the open position (see Fig. 1). While the valves are open, brine is free to enter at the bottom end and exit at the top of the sample chamber. In comparison, conventional samplers are typically run into the well with a closed sample chamber. At the desired sampling depth, a port is opened, causing the wellbore fluid to rush into the chamber. The flow-through sampler has several advantages in that (1) the sample is not altered due to decompression (possible boiling) as it enters the sample

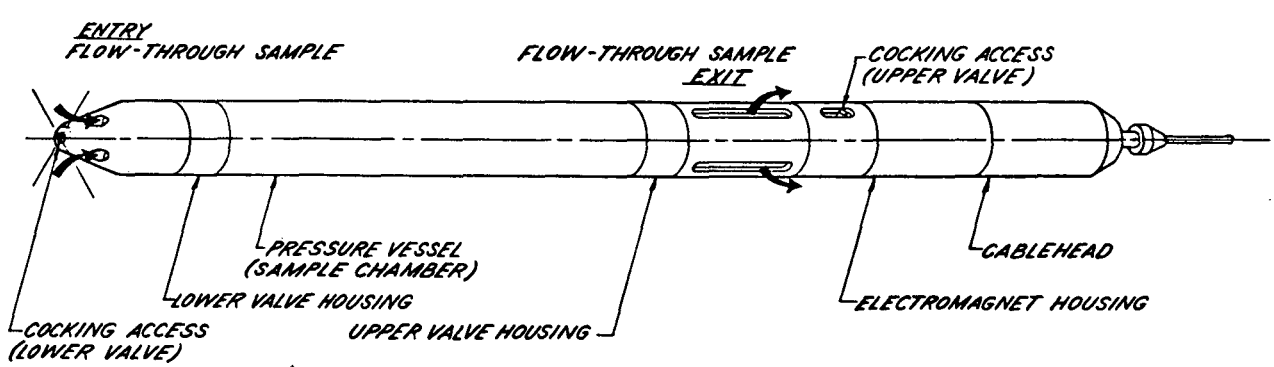

Figure 1. The sampler with its major components and the path of the fluid flow during sampling.

Table 1. Sampler Specifications	
Sampler type:	Downhole flow-through
Length:	120 in (incl. cablehead)
Diameter:	2.25 in
Weight:	112 lb
Sample volume:	1000 ml
Material:	MP35N alloy (all parts in contact with well fluid)
Sampler pressure: (internal)	20,000 psi (pending hydrostatic proof test at 350 °C)
Temperature limit:	350 °C
Power requirement:	40 ma dc

chamber; (2) precipitation of carbonate and sulfide minerals, due to boiling, does not occur; (3) gases do not come out of solution and escape or concentrate during the sampling procedure; (4) the sample will not be contaminated by mixing with air inside the sample chamber; (5) valves need be closed only during sampling.

The sampler uses a unique mechanism for holding the sampler valves open until closure is required. The mechanism consist of two primary components; an electro-magnet assembly and a lock-ball arrangement. When the magnet is energized, the lock-balls hold the valves open. After the current is removed from the magnet, the lock-balls disengage and the valves close. The following paragraphs elaborate on the operating principles of these primary components.

The initial opening of the sample valves before entering the well and the subsequent closure of the valves at the sampling depth is accomplished in the following fashion. First, a cocking tool is attached to the arming piston and is used to force the upper valve downward into an open position. This procedure also moves the armature against the magnet face. When the magnet coil is energized with 40 milliamps of current the resulting magnetic field holds the armature in place. At the same time, the ball release sleeve moves downward and forces the lock-balls into a machined groove on the cocking rod (see Fig. 3). This firmly attaches the cocking rod to the ball-cage and prevents the valve from closing as long as the magnet stays energized. The lower valve is locked open in a similar fashion.

After the sample has been collected, the upper and lower sampler valves are closed by removing the current supplied to the magnet coil. The magnet assembly de-energizes and the armature is pushed upward by the armature spring. This movement is transmitted to the ball release sleeve and the lock-balls are disengaged (see Fig. 4). Once the lock-balls are pushed from their confined position, heavy spring pressure drives the upper valve into the closed position. A connecting rod, attached to the upper valve and running through the center of the sample chamber, pulls on the release sleeve of the lower ball assembly and causes the lower valve to close in a similar manner. The precise movements of all the interacting parts are explained in much greater detail in the operating instruction manual (Weres et al., 1984).

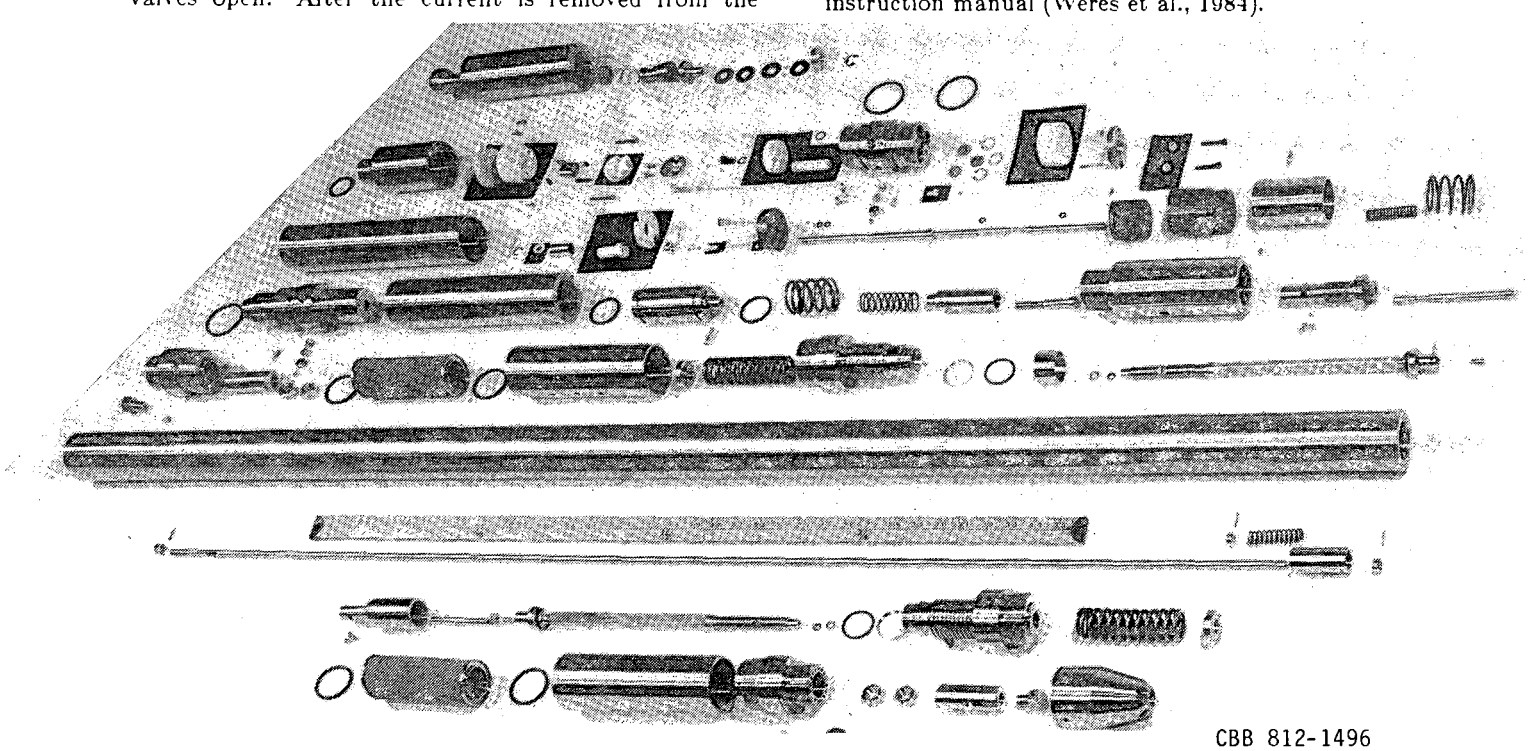

CBB 812-1496

Figure 2. The disassembled sampler.

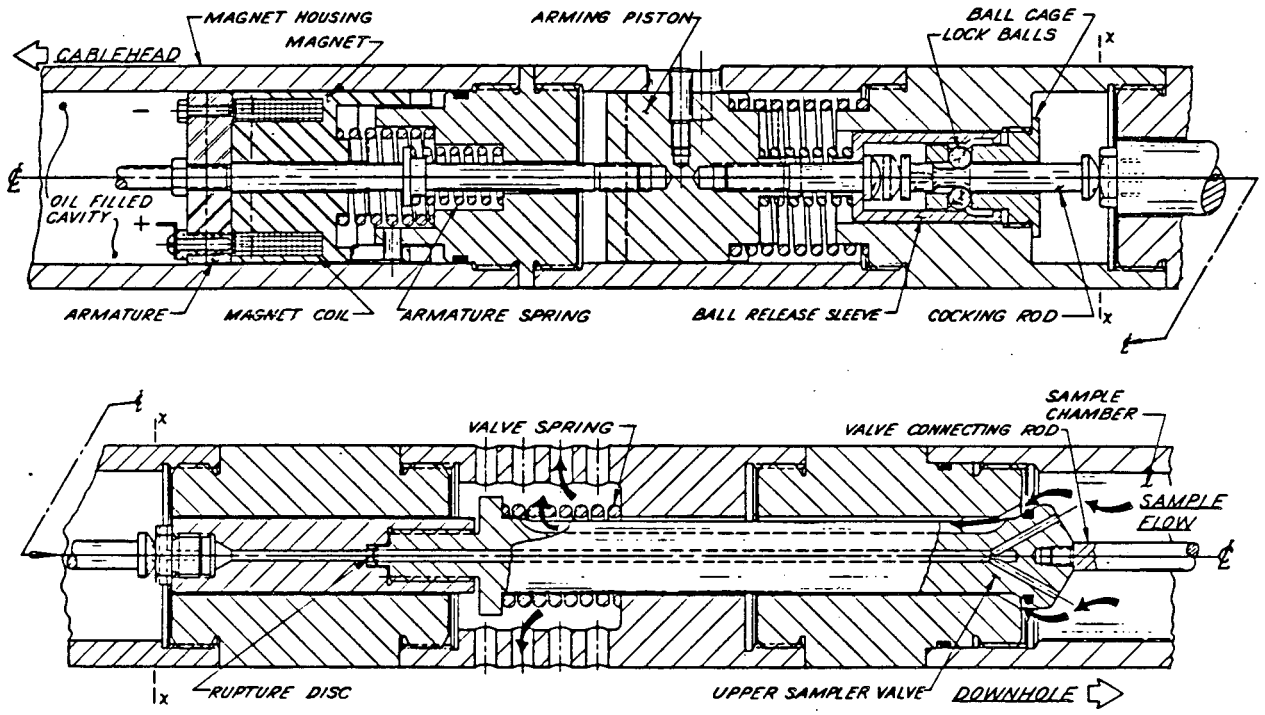

Figure 3. Schematic showing the magnet, lock-ball and upper valve assembly. The armature is held against the magnet face, the lock-balls are engaged and the valve is in the open position.

High Temperature Modifications

The maximum operating temperature of the sampler is dictated by its non-metallic parts. These are: the seals on the pressure chamber, the insulation and housing of the magnet coil, the insulating oil that protects mechanical and electrical components, and the grease used as an anti-seize compound on mating sampler parts.

In order for the sampler to operate reliably at 350°, which is well above the design temperature of 230°C, the following modifications were made. First, the original epoxy impregnated magnet coil was replaced. The new coil is fabricated from ceramic and wound with Kapton insulated magnet wire. Second, since there is a pronounced fall-off of the holding power of the magnet with increasing temperature, the strength of the armature spring was reduced. This helps eliminate premature valve closure during a sampling run. Finally, experience has shown that if the duration of a sampling run is kept at two hours or less, Viton seals perform adequately. Therefore, the existing seals were left intact. However, longer exposure to high temperatures will require other type of seals. During the sampling run at the Salton Sea Scientific Drilling Project well, an unexpected delay occurred during the retrieval of the sampler from the wellbore which caused severe hardening of the sample chamber seals. This allowed the gas portion of the sample to escape. No noticable breakdown of any of the other nonmetallic substances was observed.

The temperature rating of the sampler is above that of most logging cables. Researchers at the Sandia National Laboratory have developed a dewared battery pack. This item, when attached to the sampler, can be used to energize the magnet. An internal timer can stop the current and initiate downhole valve closure. By using this technique, the sampler can be attached to a slickline and run downhole with no electrical connection to the surface. The drawback to this technique is the absence of any indication that the valves closed at the correct time and/or depth.

Operating Procedure

A specially designed cablehead is used to attach the fully assembled sampler to a high temperature single conductor logging cable. The interior of the magnet housing and the cablehead assembly are filled with a high temperature insulating oil. This is accomplished by connecting a hand operated pump to an injection port located near the base of the magnet housing. By using this procedure, delicate mechanical and electrical components are protected from the adverse effect of wellbore fluid. Even though these parts are in pressure

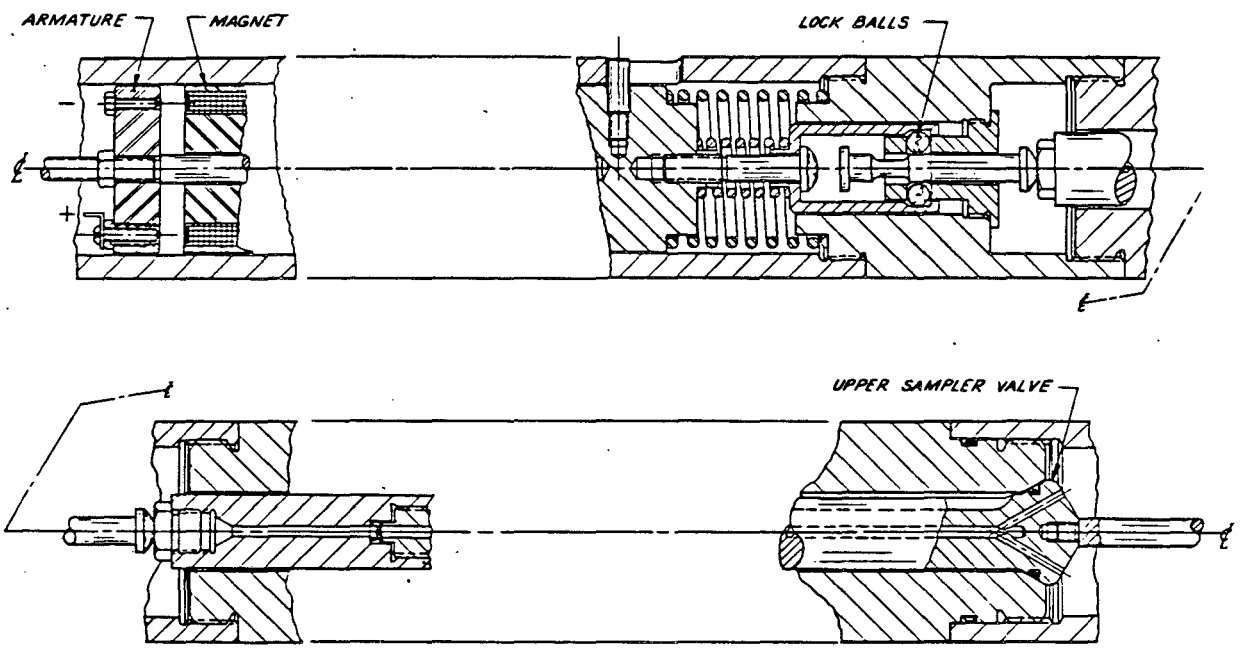

Figure 4. Schematic of the armature separated from the magnet face. The lock-balls are disengaged and the valve is in the closed position.

equilibrium with the wellbore fluid during a sampling run, the high density of the injected oil prevents the wellbore fluid from entering near the top of the cable-head. This technique also eliminates the need for differential pressure seals, except as required for sealing the sample chamber.

Prior to introducing the sampler into a well, the upper and lower sampler valves are opened with the help of cocking tools and held in that position by supplying the required current through the conductor of the logging cable. The sampler is then lowered into the wellbore. After the appropriate sampling depth is reached, the sampler is "parked" there for several minutes. This ensures that the upward flow of the producing well flushes the inside of the sample chamber with brine from the sampling depth.

The sampler valves are closed by decreasing the current supply to the electro-magnet. A sudden drop in the current read-out at the surface indicates that the valves have closed. Since the movement of the valves from their open to closed position is very slight, no adverse effects on the fluid trapped inside the sample chamber occur. As the sampler is brought up the well, the valves are designed to seat even better than during the initial closure. This is caused by an increasing pressure differential between the sample chamber and the wellbore fluid.

After retrieving the sampler from the well, piercing valves are attached to rupture disks which are located in the sampler valve bodies (see Fig. 3). A custom designed sample extraction system (Weres et al., 1984) may be used to remove the brine and gas from the sampler without exposing them to air.

Summary

A flow-through downhole fluid sampler capable of collecting samples at temperatures of up to 350 °C has been developed at Lawrence Berkeley Laboratory under the joint sponsorship of the Gas Research Institute and the U.S. Department of Energy. The ability of the sampler to operate under the harsh downhole conditions, typical of the geothermal systems in the Imperial Valley, California, was demonstrated when the sampler was used successfully to collect a sample of brine from the bottom of the Salton Sea Scientific Drilling Project well.

The reliability of the sampler results from the simplicity of the operating concept. The need for sophisticated downhole electronics is eliminated by relying primarily on a mechanical mechanism for closing the valves of the sample chamber. The electro-magnet, which is used to keep the valves open while the sampler is lowered into the borehole, need only be de-energized to initiate valve closure. The 40 milliamp current required to maintain a sufficient magnetic field to keep the valves open can be supplied from the surface through an electric cable or with a dewared downhole battery pack.

Acknowledgements

The design and fabrication of this sampler was originally funded by the Gas Research Institute under Contract No. 55081-212-0552. We would like to thank Leo Rogers for allowing us to use the sampler in support of the Salton Sea Scientific Drilling Project. This work was also supported in part by the U.S. Department of Energy, Office of Basic Energy Sciences and the Assistant Secretary for Conservation and Renewable Energy, Division of Geothermal Technology, under Contract No. DE-AC03-76SF00098. We would also like to thank Art White and Harold Wollenberg of the Earth Sciences Division for instigating the use of the sampler at the Salton Sea well and Donald Lippert for his technical expertise in the actual use of the sampler.

References

Michel, M., ed., Dudak, B., Galbraith, R., Hansen, L., Sverjensky, D., and Weres, O., 1984, Fluid Sampling and Chemical Modeling of Geopressured Brines Containing Methane: Final Report (March 1980 to February 1981), Report LBL-12832, GRI-76 018, Lawrence Berkeley Laboratory, Berkeley, CA.

Weres, O., Michel, M., and Harnden, W., 1984, Downhole Sampling of Geopressured Wells: Final Report for 1982-1984, Gas Research Institute Contract No. 5081-212-0552, Report LBL-16518, Lawrence Berkeley Laboratory.

Weres, O., Harnden, W., Biocca, A., and Solbau, R., 1984, Operating Instructions for the LBL/GRI Downhole Sampler and Sample Extraction System, Report LBL-18102, Lawrence Berkeley Laboratory.

This report was done with support from the Department of Energy. Any conclusions or opinions expressed in this report represent solely those of the author(s) and not necessarily those of The Regents of the University of California, the Lawrence Berkeley Laboratory or the Department of Energy.

Reference to a company or product name does not imply approval or recommendation of the product by the University of California or the U.S. Department of Energy to the exclusion of others that may be suitable.

LAWRENCE BERKELEY LABORATORY
TECHNICAL INFORMATION DEPARTMENT
UNIVERSITY OF CALIFORNIA
BERKELEY, CALIFORNIA 94720