LBL-21574 c.2

Lawrence Berkeley Laboratory

UNIVERSITY OF CALIFORNIA

RECEIVED
LAWRENCE
BERKELEY LABORATORY

JUN 1 8 1986

LIBRARY AND
DOCUMENTS SECTION

APPLIED SCIENCE DIVISION

To be presented at the Sixth Annual Contractors Meeting on Contaminant Control in Coal Derived Gas Streams, Morgantown, WV, June 4-5, 1986

A COMPARISON OF THE UCB SULFUR RECOVERY PROCESS WITH CONVENTIONAL SULFUR RECOVERY TECHNOLOGY FOR TREATING RECYCLE GAS FROM A CRUDE OIL RESIDUUM HYDROTREATER

S. Lynn, D.W. Neumann, S.F. Sciamanna, and F.H. Vorhis

March 1986

TWO-WEEK LOAN COPY

This is a Library Circulating Copy which may be borrowed for two weeks.

APPLIED SCIENCE DIVISION

LBL-21574 c.2

Prepared for the U.S. Department of Energy under Contract DE-AC03-76SF00098

DISCLAIMER

This document was prepared as an account of work sponsored by the United States Government. While this document is believed to contain correct information, neither the United States Government nor any agency thereof, nor the Regents of the University of California, nor any of their employees, makes any warranty, express or implied, or assumes any legal responsibility for the accuracy, completeness, or usefulness of any information, apparatus, product, or process disclosed, or represents that its use would not infringe privately owned rights. Reference herein to any specific commercial product, process, or service by its trade name, trademark, manufacturer, or otherwise, does not necessarily constitute or imply its endorsement, recommendation, or favoring by the United States Government or any agency thereof, or the Regents of the University of California. The views and opinions of authors expressed herein do not necessarily state or reflect those of the United States Government or any agency thereof or the Regents of the University of California.

A COMPARISON OF THE

UCB SULFUR RECOVERY PROCESS

WITH

CONVENTIONAL SULFUR RECOVERY TECHNOLOGY

FOR TREATING

RECYCLE GAS FROM A CRUDE OIL RESIDUUM HYDROTREATER

by

Scott Lynn, Dan W. Neumann, Steven F. Sciamanna
and
Frederick H. Vorhis

Lawrence Berkeley Laboratory
and
Department of Chemical Engineering
University of California
Berkeley, CA 94720
March 31, 1986

Contract: Removal of H_2S from Gasified Coal - - AA 15 15 050

Contractor: Lawrence Berkeley Laboratory
Applied Science Division
University of California
Berkeley, CA 94720

TABLE OF CONTENTS

I. SUMMARY 1

II. INTRODUCTION 2

A. Background 2

B. The Design Problem 3

III. PROCESS DESCRIPTION - UCB SULFUR RECOVERY PROCESS 6

A. Processing Steps 6

1. H_2S Absorber 6

2. Reactor - Crystallizer 6

3. Secondary Absorber 6

4. Solvent Stripper 8

5. Sulfur Separation 8

6. SO_2 Absorber 9

B. Capital Costs and Utilities Requirements 9

IV. PROCESS DESCRIPTION - CONVENTIONAL TECHNOLOGY 9

A. Process Description 9

1. DEA Absorber/Stripper Operation 12

2. Claus Plant 12

3. SCOT Process 12

B. Capital Costs and Utilities Requirements 13

V. PROCESS COMPARISONS AND CONCLUSIONS 15

A. Cost Comparisons 15

B. Equipment Requirements 15

1. Process Similarities 15

2. Process Differences 16

C. Utilities Requirements 17

D. Development Status 17

Acknowledgements 18

VI. LITERATURE CITED 18

TABLE OF CONTENTS
(Continued)

FIGURES AND TABLES:

Figure 1	- Residuum Desulfurization Process	4
Figure 2	- **UCB Sulfur Recovery Process**	7, 21
Figure 3	- Conventional Sulfur Recovery Process	11, 35
Table I	- Design Basis for the Process Comparison	5
Table II	- Cost Summary: **UCB Sulfur Recovery Process**	10
Table III	- Cost Summary: Conventional Sulfur Recovery Technology	14

APPENDIX A - Process Details: UCB Sulfur Recovery Process 20

A. Selection of Process Conditions 20

1. *Solvent Flow in Absorber T-1* 20
2. *Estimation of Co-absorption in Absorber T-1* 29
3. *Calculation of Temperature Rise in Primary Absorber* 29
4. *Secondary Absorber T-2* 30
5. *Crystallizer K-1* 30
6. *Solvent Surge Tank and Settler K-2* 31
7. *Solvent Stripper T-4* 31
8. *Centrifuge* 32
9. *Sulfur Furnace and SO_2 Scrubber T-5* 32
10. *Heat Exchangers* 32

Table A-I	- Stream Flows and Conditions for **UCB Sulfur Recovery Process**	22
Table A-II	- Utilities Use and Costs: **UCB Sulfur Recovery Process**	25
Table A-III	- Major Equipment List: **UCB Sulfur Recovery Process**	26

APPENDIX B - Process Details: Conventional Sulfur Recovery Process 33

1. *DEA Plant* 33
2. *Claus Plant* 33
3. *SCOT Process* 34

Table B-I	- Stream Flows for Conventional Sulfur Recovery Technology	36
Table B-II	- Utilities Costs: Conventional Sulfur Recovery Technology	40
Table B-III	- Major Equipment List: Conventional Sulfur Recovery Technology	41

I. SUMMARY

The University of California, Berkeley, **Sulfur Recovery Process (UCBSRP)** is being developed as an alternative to conventional sulfur recovery technology for removing hydrogen sulfide from gas streams and converting it to elemental sulfur. In the **UCBSRP** the hydrogen sulfide is absorbed by a physical solvent and the resulting solution of H_2S is mixed with a stoichiometrically equivalent amount of sulfur dioxide dissolved in the same solvent. The reaction between the two sulfur compounds forms water, which is miscible with the solvent, and elemental sulfur, which crystallizes from solution when its solubility is exceeded. Part of the sulfur formed in the reaction is burned to make the SO_2 needed in the process, and the heat of combustion is recovered in a waste-heat boiler. The water content of the solvent is maintained at 3 to 4 wt % by stripping the excess water from the side stream of solvent that is subsequently used to absorb the SO_2. Sulfur is recovered by cooling the solution, settling the additional crystals that form, and centrifuging the slurry pumped from the bottom of the crystallizer-surge tank. Patent rights to this process are held by the University.

In this report the **UCBSRP** is compared to conventional technology for the case of the removal of H_2S from the recycle gas of a high-pressure petroleum residuum hydrotreater. The conventional technology selected for this comparison consists of an absorber/stripper operation using diethanol amine as the absorbent, a Claus sulfur plant, and a SCOT tail-gas treating unit. Flowsheets, stream flows and conditions, and a detailed list of the major items of equipment are presented for both processes. The direct fixed capital (DFC) for each process was assumed to be five times the purchase price of the major equipment. From this comparison it is estimated that the DFC for the **UCBSRP** would be about 61% of that for the conventional technology. The utility costs for this application of the UCBSRP are estimated to be less than the credit for the high-pressure steam produced whereas the utility costs for the conventional process are substantially more.

The accuracy of the equipment sizes and stream flows used to estimate the costs for this process is dependent on the accuracy of the available information on gas and sulfur solubilities, reaction kinetics, crystallizer performance and absorption with chemical reaction. The solubility and kinetics data were obtained in this laboratory and are felt to be highly reliable. Experiments to study sulfur crystallization and SO_2-enhanced absorption of H_2S are just getting underway. Nevertheless, the degree of uncertainty in sizing the equipment for the UCBSRP is felt to be much smaller than the differential in costs between this process and conventional technology.

II. INTRODUCTION

Hydrogen sulfide occurs as a contaminant in many different industrial gas streams. Examples of such streams include natural gas, refinery gases resulting from petroleum cracking and hydrodesulfurization, and the products of both high- and low-temperature coal gasification. The completeness with which the H_2S must be removed depends on the use to which the gas stream must subsequently be put. In some cases the treated gas must contain less than 1 ppm H_2S, in other cases much less stringent treatment is required. In all cases it is desirable to convert the recovered H_2S to elemental sulfur with minimal escape of any sulfur compounds to the environment. When one considers that this industrial problem has been faced for at least as long as the use of synthetic or natural gas for domestic heating has been common, one is surprised by how many different commercial technologies are currently in use (Kohl and Riesenfeld, 1979). The purpose of this report is to describe a new sulfur recovery process that is currently under development at the University of California, Berkeley. The project is being funded by the Coal Gasification Program of the U.S. Department of Energy through the Lawrence Berkeley Laboratory. Patent rights to this process are held by the University.

The **UCB Sulfur Recovery Process (UCBSRP)** is being developed as an alternative to conventional sulfur recovery technology for removing hydrogen sulfide from gas streams and converting it to elemental sulfur. In the **UCBSRP** the hydrogen sulfide is absorbed by a physical solvent and the resulting solution of H_2S is mixed with a stoichiometrically equivalent amount of sulfur dioxide dissolved in the same solvent. The reaction between the two sulfur compounds forms water, which is miscible with the solvent, and elemental sulfur, which crystallizes from solution when its solubility is exceeded. Part of the sulfur formed in the reaction is burned to make the SO_2 needed in the process, and the heat of combustion is recovered in a waste-heat boiler. The water content of the solvent is maintained at about 3 to 4 wt% by stripping the excess water from the side stream of solvent that is subsequently used to absorb the SO_2. Sulfur is recovered by cooling the solution, settling the additional crystals that form, and centrifuging the slurry pumped from the bottom of the solvent surge tank.

The process configuration for the **UCBSRP** will vary with the partial pressure of H_2S in the gas to be treated, with the degree of H_2S-removal required, with the selectivity for H_2S desired, and with the nature of the other components in the gas to be treated. One configuration appears to be well suited for the treatment of gas streams in which the partial pressure of H_2S is greater than 50 lbs/sq. in. absolute (psia), a second is more advantageous when the H_2S partial pressure lies between 5 and 50 psia, and a third would be used when the product of total pressure and inlet mole fraction of H_2S is less than 5 psia. The first of these process configurations is the subject of this report. The **UCBSRP** is normally quite selective for H_2S; COS should be hydrolyzed ahead of the primary absorber to insure its removal from the gas being treated. Small amounts of gases such as CO_2, hydrocarbons, COS and mercaptans will be co-absorbed with the H_2S; they are inert and will pass through the process unchanged without causing difficulties.

Such gases may be recovered free of H_2S but would require additional treatment to remove other sulfur compounds (if present). The gas treated in the primary absorber may be dried and its H_2S content reduced to less than 1 part per million with little added process complexity or increase in operating cost.

B. The Design Problem

It is common practice to include a recycle-gas scrubber in hydrotreating processes to remove the H_2S formed in the process from the recycle loop. Figure 1 shows a simplified flow diagram for a crude oil residuum hydrodesulfurization process operating at 2000 psia (lbs/in^2 absolute). The absorber is designed for bulk removal of H_2S. Complete H_2S removal is not necessary since the gas is recycled to the reactor where H_2S is generated by the hydrogenation of organic sulfur compounds. The operating rate chosen for this study was the recovery of 100 long tons per day of sulfur from 58.5 million standard cubic feet per day of gas containing 5% H_2S; H_2S content is thereby reduced to about 0.5%. If the hydrotreater were to operate without the absorber, H_2S would build up in the recycle gas to a much higher level. This would require operation at a still higher pressure to maintain the same hydrogen partial pressure in the reactor. It would also be necessary to provide additional hydrotreating catalyst since one effect of a high partial pressure of H_2S is to suppress catalyst activity.

Conventional processing uses aqueous diethanol amine (DEA) to scrub H_2S from recycle hydrogen. The absorber is placed in the process downstream of the product cooler and the high-pressure separator. After H_2S removal the hydrogen is compressed and recycled to the reactor preheaters. The DEA removes only H_2S and a small amount of dissolved hydrogen. The solubility of hydrocarbons in the aqueous solution is small and there is relatively little hydrocarbon removal.

In this report the **UCBSRP** is compared to conventional technology for the case of the removal of H_2S from the recycle gas of a high-pressure petroleum residuum hydrotreater. This application was chosen because it involves H_2S removal with no co-absorption of CO_2 and minimal complication from the simultaneous removal of light hydrocarbons. Sulfur recovery is therefore emphasized. Table I summarizes the design bases.

The **UCBSRP** solvent absorbs some light hydrocarbons as well as hydrogen from the recycle gas. This will have very little effect on the hydrotreater material balance. The design for the **UCBSRP** includes facilities to deliver these hydrocarbons free of sulfur compounds to the refinery gas system. Recovered material is assumed to be utilized in facilities elsewhere in the refinery.

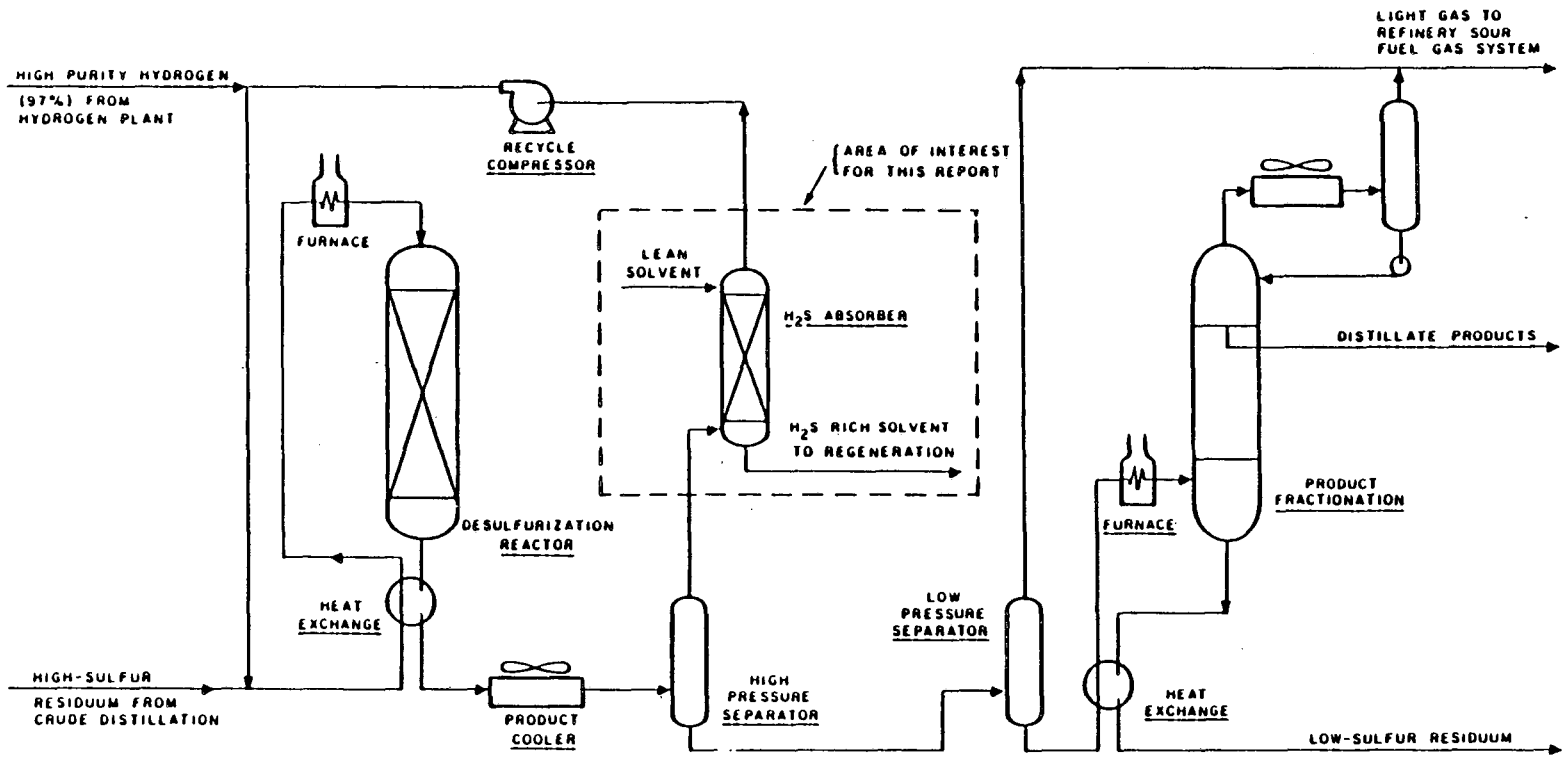

FIGURE 1
SIMPLIFIED PROCESS FLOW DIAGRAM
RESIDUUM DESULFURIZATION PROCESS

XBL 861-340

Table I

DESIGN BASIS FOR THE PROCESS COMPARISON

UCB SULFUR RECOVERY PROCESS *vs.* CONVENTIONAL TECHNOLOGY

Feed

Residuum Desulfurization Recycle Gas	
Pressure, psia (lbs/sq. in. abs.)	2,000
Temperature, ^{o}C	35
Rate, lb-mole/hr	6,412
Composition, mol%	
Hydrogen	79.35
Methane	12.96
Ethane	1.26
Propane	0.89
Butanes	0.39
Pentane and Heavier	0.09
Hydrogen Sulfide	5.00
Water	0.05

Product Specifications

Treated Gas: H_2S content, mol% (max.)	0.5
Sulfur purity: wt% (min.)	99.98
Waste Water:	Free of H_2S or SO_2 contamination
Stack Gas: SO_2 content, ppm (max.)	100
Flash Gas to Refinery Fuel: H_2S content, ppm (max.)	100

Utility Availability and Cost

Fuel Gas	$\$/10^3$ std ft^3	4.50
Electricity	\$/kW-hr	0.07
Steam: 615 psia sat'd	$\$/10^3$ lb	5.25
165 psia sat'd	$\$/10^3$ lb	4.50
75 psia sat'd	$\$/10^3$ lb	3.85
Cooling Water, 25°C	$\$/10^3$ gal	0.10

Operating Rate: Hours/year 8,000

In the hydrotreating process some hydrogen sulfide leaves the recycle loop dissolved in the net hydrotreated product. This H_2S ends up in a gas stream leaving the product separation section of the hydrotreater. No attempt has been made to treat this H_2S in either case. In conventional processing this gas stream would be treated with aqueous DEA to remove H_2S. This DEA solution would be regenerated in the same stripper as the DEA used for H_2S removal from recycle gas. Similarly, the H_2S (and propane and heavier hydrocarbons) can be recovered in the UCBSRP by feeding this gas stream to an enlarged version of the secondary absorber while using the same solvent regenerating equipment.

III. PROCESS DESCRIPTION - UCB SULFUR RECOVERY PROCESS

A. Processing Steps

1. Primary Absorber

The process flow diagram for the UCBSRP is shown in Figure 2. The component balances, temperatures and pressures for the numbered streams are given in Table A-I, pp. 22 - 24. Sour recycle gas from the residuum hydrotreater is contacted with cool, lean solvent at a pressure of 2000 psia in the primary absorber, T-1. The H_2S level in the treated gas is reduced to about 0.5%. The heat of solution of the H_2S raises the temperature of the solvent by about 30°C. The vapor-liquid equilibrium data for designing this column were obtained in this laboratory by S.F. Sciamanna (1986).

2. Reactor/Crystallizer

The H_2S-laden solution from the absorber is cooled and fed to the reactor/crystallizer, K-1, where the H_2S reacts with SO_2 dissolved in a second liquid stream. The kinetics of this reaction, which is catalyzed by aromatic nitrogen compounds such as N,N-dimethyl aniline, was reported in a paper by Neumann and Lynn (1986) and is the subject of further investigation in this laboratory (Neumann, 1986). The heat of reaction raises the temperature of the combined streams about 20°C. K-1 is operated at 130 psia, so flashing of dissolved gases also occurs. The crystallizer is operated as a fluidized bed of sulfur crystals. The crystal-size distribution produced in steady-state operation of the crystallizer is currently under study. Based on the results obtained in batch reactions the average crystal size is expected to exceed 100 micrometers. The two feed streams are introduced near the bottom of the vessel where they mix with the slurry of sulfur crystals near the bottom as reaction occurs.

3. Secondary Absorber

The flow of SO_2 solution entering K-1 is controlled so that a small excess of H_2S is maintained after reaction is complete, as indicated by the H_2S content of the vapor leaving K-1. About 1% of the H_2S is left unreacted. Vapor from the crystallizer flows to

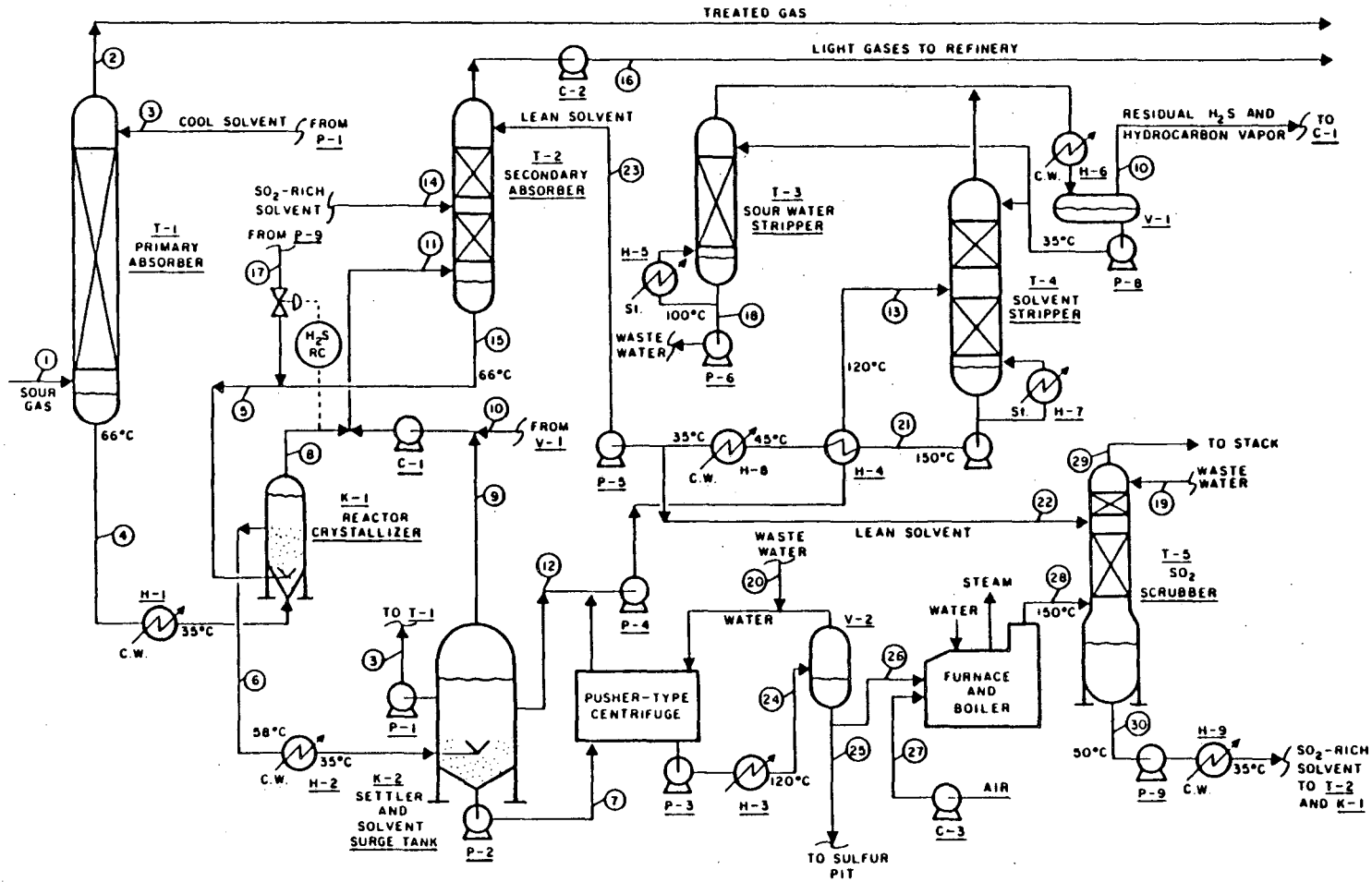

FIGURE 2
PROCESS FLOW DIAGRAM
UCB SULFUR RECOVERY PROCESS

XBL 861-341

secondary absorber T-2 where the residual H_2S is absorbed by a solution of SO_2. A study of the reactive absorption of H_2S by a solution of SO_2 is currently underway. Calculations based on the kinetics data mentioned above indicate that the presence of the SO_2 should effectively enhance the rate of absorption of the H_2S. Loss of SO_2 by stripping from this solution is prevented by scrubbing the vapor with lean solvent in the top of T-2. The sweet hydrocarbon vapor is then compressed for delivery to the plant fuel system.

Crystal-laden solvent from crystallizer K-1 is cooled to 35°C and flashed to atmospheric pressure in the solvent surge tank and settler, K-2. The vapor, hydrocarbons and residual H_2S, leaving K-2 is compressed to 130 psia in compressor C-1 and joins the vapor from K-1. K-2 is sized to permit gravity separation of sulfur crystals from the solvent. A liquid stream from the top of the vessel is fed back to the primary absorber, T-1, without further treatment. The water content of the solvent at this point in the process is 3 to 4 wt% H_2O.

4. Solvent Stripper

The solvent stripper, T-4, receives feed preheated to 120°C (with some flashing of water and other vapors) from K-2. The column is reboiled with medium-pressure steam to reduce the water content of solvent to about 1 wt %. Residual H_2S and hydrocarbons are also stripped from the solvent. The top bed of the solvent stripper is refluxed with water to minimize solvent loss to the net overhead stream. Overhead from the solvent stripper is condensed with cooling water. The column operates at atmospheric pressure. The hydrocarbon vapor and H_2S in the stripper overhead are routed to compressor C-1 and sent to the secondary absorber T-2. Condensed water is stripped of H_2S and used in the centrifuge and SO_2 scrubber as described later. Net water of reaction is sent to disposal.

The bottoms stream from the solvent stripper is cooled in exchange with incoming wet solvent. This stream becomes the cool, lean solvent used in the secondary absorber and in the SO_2 absorber, T-5. There is no SO_2 in this solvent because the crystallizer, surge tank and solvent stripper are maintained under slightly H_2S-rich conditions. There is very little H_2S in the solvent because of the flashing of hydrocarbons and water vapor at the inlet to T-4 and of the steam stripping within T-4.

5. Sulfur Separation

The crystallized sulfur product is removed from the bottom of the solvent settler and surge tank, K-2, as a slurry. It is fed to a pusher-type centrifuge. The centrifuge cake is washed with a rinse water stream and is then reslurried with solvent-free water. The solvent stream, combined with the rinse water, is pumped from the centrifuge to the solvent stripper. The sulfur-water slurry is heated under pressure above the melting point of sulfur and the two liquids are decanted in separator V-2. Water from this

separation returns to the centrifuge. The net molten sulfur product is routed to a sulfur pit. This sulfur is substantially free of dissolved H_2S since the sulfur crystals were washed with water before being melted.

6. SO_2 Absorber

A gas containing about 21% SO_2 is generated by combustion of part of the molten sulfur with air in a furnace and waste-heat boiler. Cool, lean solvent is used to absorb this SO_2 in column T-5. Vapor-liquid equilibrium data obtained here (Demyanovich, 1984) show the solubility of SO_2 in the solvent to be quite high, so the concentration of SO_2 in the gas leaving T-5 can readily be reduced to a few parts per million. A small water stream is fed to the top of the scrubber to minimize loss of solvent vapor. The bottom of the scrubber serves as a tank to provide an inventory of SO_2 solution to facillitate process control. Storage of SO_2 solution permits partial decoupling of the rate at which SO_2 is generated from the rate at which H_2S is absorbed in T-1. The sulfur furnace can operate under steady conditions that need to be varied only occasionally in response to changes in the inventory of SO_2 solution in the bottom of T-5. The SO_2 solution is fed back to the process at K-1; part of it passes by way of the secondary absorber, T-2, where it enhances the absorption of H_2S from the hydrocarbon stream leaving the process.

B. Capital Costs and Utilities Requirements

Table II presents a summary of the equipment costs and the annual utilities requirements for the **UCB Sulfur Recovery Process**, abstracted from Tables A-II and A-III, pp. 25 - 28. A more detailed discussion of the basis for the selection of the process conditions and for equipment sizing is contained in Appendix I, which begins on pg. 20. The cost of each piece of major equipment was estimated from the cost data that are presented in Peters and Timmerhaus (1980).

IV. PROCESS DESCRIPTION - CONVENTIONAL TECHNOLOGY

A. Process Subdivisions

The process flow diagram for the conventional technology chosen for this comparison is shown in Figure 3, pg. 11. Component flows, temperatures and pressures for the numbered streams are given in Table B-I, pp. 35 - 38. Recycle gas from the residuum hydrotreating unit is contacted with aqueous diethanolamine (DEA) for H_2S removal. Hydrogen sulfide is separated from DEA in a conventional DEA stripper, then fed to a three-stage Claus sulfur plant. About 96% of the sulfur is recovered as liquid in this plant. The balance leaves the Claus plant in the tail gas stream as H_2S, SO_2, and sulfur vapor. Other sulfur compounds may also be present.

Table II

COST SUMMARY

UCB SULFUR RECOVERY PROCESS

EQUIPMENT ITEMS		PURCHASED COST
Columns: T-1 to T-5		$156,000
Vessels: K-1, K-2; V-1, V-2		57,500
Exchangers: H-1 to H-9		154,000
Furnace and Boiler:		135,000
Centrifuge:		50,000
Compressors: C-1 to C-3		114,000
Pumps: P-1 to P-9		128,000
Total cost of major equipment (1979)	*	**$795,000**
Adjusted cost of major equipment	**	**$1,121,000**
Estimated Direct Fixed Capital	***	**$5,605,000**

UTILITIES	RATE OF USE	ANNUAL COST
Electricity	490 kW	$274,400
Steam Credit	< 18,000 lbs/hr >	< 756,000 >
Steam Consumption	9,900 lbs/hr	357,800
Cooling Water	1,470 gal/min	70,600
Total Annual Credit for Utilities		**< $53,200 >**

* Based on cost data from Peters and Timmerhaus (1980), which are normalized to January, 1979, when the M & S Equipment Cost Index was 561.

** Adjusted on the basis of the M & S Equipment Cost Index of 791 for October, 1985 (*Chemical Engineering*, Jan. 20, 1986).

*** Assumes D.F.C. equal to five times the total cost of items of major equipment.

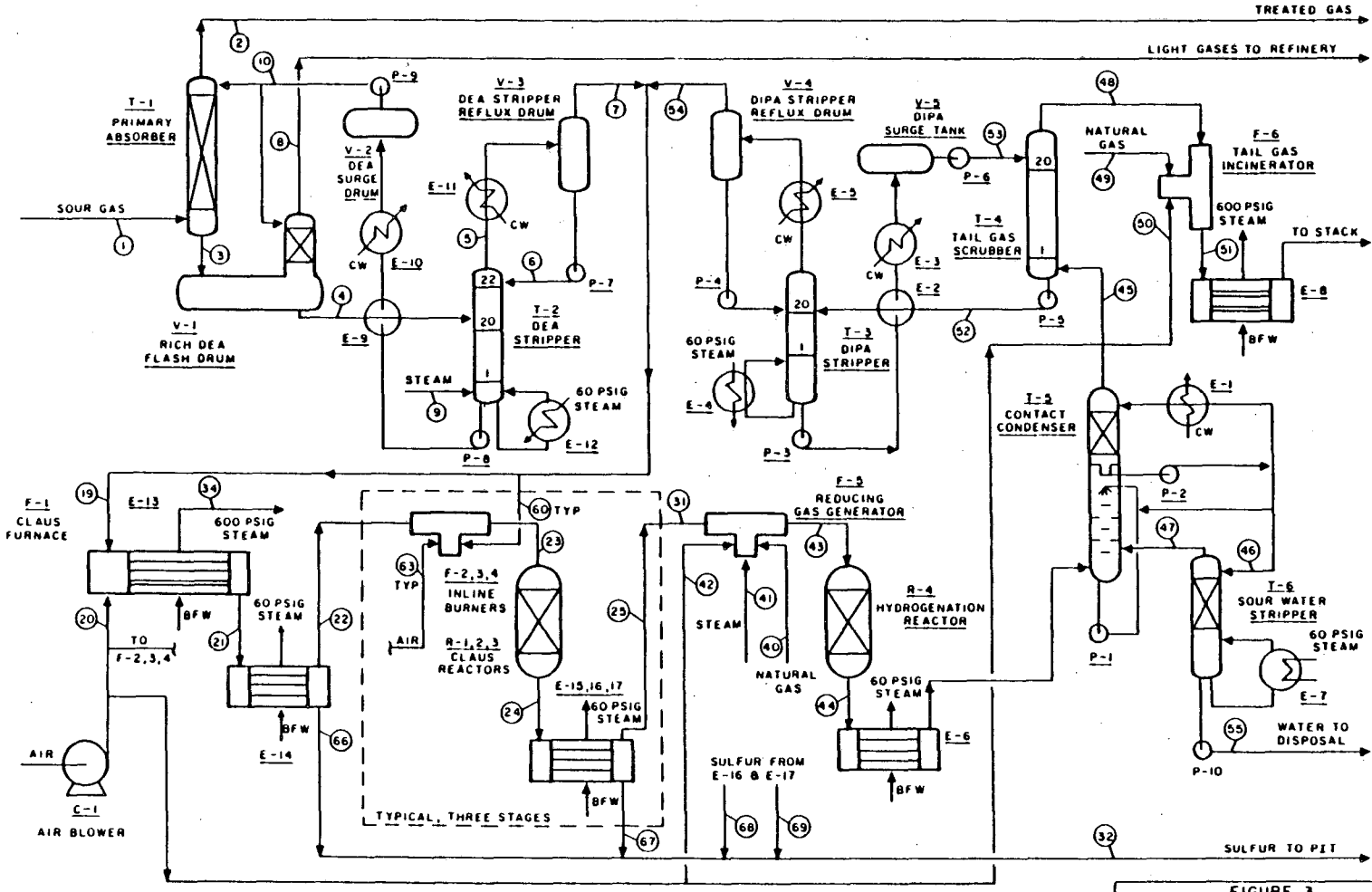

FIGURE 3
PROCESS FLOW DIAGRAM
CONVENTIONAL PROCESSING

XBL 861-342

Tail gas from the Claus plant is treated by the Shell Claus Off-gas Treatment (SCOT) process. This is a sulfur recovery process licensed from Shell Development Company of Houston, Texas. The process arrangement shown on the flow diagram is taken from open-literature descriptions of the process. Process conditions and flow rates are estimated. The Shell Development Company has not had the opportunity to review or comment on these estimates. Any commercial application of this process requires a license from Shell.

1. DEA Absorber/Stripper Operation

DEA from the high pressure absorber, T-1, is flashed at 200 psia for removal of dissolved and entrained hydrogen and hydrocarbons, then stripped at 25 psia in a reboiled stripper. The lean DEA from the bottom of this stripper is cooled first by exchange with rich DEA, then by water cooling before it is fed back to the absorber. The acid gas is fed to the Claus plant.

2. Claus Plant

One-third of the H_2S in the acid gas is oxidized to SO_2 with a controlled amount of air in furnace F-1, thereby forming a gas containing two moles of H_2S per mole of SO_2. At flame temperature the H_2S and SO_2 are in chemical equilibrium with sulfur and water vapors. This gas mixture is cooled by generation of steam. Gas from the waste heat boiler is further cooled to 168°C by generation of low pressure steam as most of the sulfur formed in the reaction furnace is condensed.

Gas from the first sulfur condenser is reheated to about 230°C and fed to a catalytic reactor, R-1, for further conversion to sulfur. The gas reheat is accomplished by the combustion of a small amount of the original acid gas feed in an inline burner, F-2. Products from the first converter are sent to a condenser to separate the sulfur made in the reactor. There follow two more stages , nearly identical to the first, consisting of reheat, reactor and condenser. Of the original H_2S in the feed, about 56% reacts and is recovered as liquid sulfur in the first condenser E-14. The recovery in the condensers following the catalytic stages is 29%, 8% and 3%, leaving about 4% in the form of unreacted H_2S and SO_2 in the tail gas leaving the Claus plant.

3. SCOT Process

All sulfur compounds in the Claus plant tail gas are reduced to hydrogen sulfide in this part of the process. The tail gas is heated to about 345°C by an inline burner F-5. Substoichiometric operation of this burner provides a source of hydrogen and carbon monoxide for the reduction step that follows. This preheated mixture flows to reactor R-4 and is passed over a hydrogenation catalyst, typically a cobalt-molybdenum catalyst, where H_2 and CO reduce all sulfur compounds to H_2S. The process is operated to maintain a hydrogen content of about 1% in the reactor effluent. Reactor effluent is first cooled by generation of low pressure steam in boiler E-6, is further cooled in a

desuperheater that works by adiabatic saturation of the gas, and is finally cooled to 50°C in a direct-contact condenser, T-5. The desuperheater provides a guard against misoperation that could leave residual SO_2 in the effluent from the reducing reactor, R-4. Any SO_2 present at this point will be absorbed in the circulating liquid, dramatically lowering the pH. A caustic injection system is provided to neutralize the solution to a pH such that it absorbs substantially all of the SO_2 while passing most of the H_2S. Water condensed in the contact condenser is routed to the H_2S stripper, T-6, then cooled and sent to disposal. Overhead from the H_2S stripper is returned to the desuperheater.

The H_2S-containing gas from the contact condenser is scrubbed with an aqueous amine solution in column T-4. Either methyl-diethanol amine or di-isopropanol amine (DIPA) is used because of their selective absorption of H_2S in the presence of CO_2. A selective amine is required because the acid gas that is subsequently stripped from the amine solution is recycled to the front end of the Claus plant where H_2S is recovered as sulfur. If the amine solution used in the SCOT process were not highly selective for H_2S there would be a huge recycle stream of CO_2 as well, making the process impracticable. The selective amine permits H_2S recycle with minimal buildup of CO_2.

Tail gas from the H_2S absorber is oxidized in incinerator F-6 to ensure that any sulfur compounds released from the process to the atmosphere have been converted to SO_2 and to recover the heating value of the residual hydrogen when the tail gas is cooled in boiler E-8.

B. Capital Costs and Utilities Requirements

Table III presents a summary of the equipment costs and annual utilities requirements for recovering sulfur from the gas stream in question by this combination of conventional technologies, abstracted from Tables B-II and B-III, pp. 40 - 43. A more detailed discussion of the basis for the selection of the process conditions and for equipment sizing is contained in Appendix B, pp. 33 - 43. The cost of each piece of major equipment was estimated from the cost data of Peters and Timmerhaus (1980) as before.

Table III

COST SUMMARY

CONVENTIONAL SULFUR RECOVERY TECHNOLOGY

EQUIPMENT ITEMS		PURCHASED COST
Columns: T-1 to T-6		$241,000
Vessels: V-1 to V-5		78,000
Exchangers: E-1 to E-17		458,000
Furnaces, Boilers and Burners:		206,000
Reactors: R-1 to R-4		87,000
Compressor: C-1		100,000
Pumps: P-1 to P-10		132,000
Total cost of major equipment (1979)	*	**$1,302,000**
Adjusted cost of major equipment	**	**$1,836,000**
Estimated Direct Fixed Capital	***	**$9,179,000**

UTILITIES	RATE OF USE	ANNUAL COST
Fuel Consumption	29.6 lb-mol CH_4/hr	$405,000
Electricity	650 kW	362,700
Steam Credit	< 23,300 lbs/hr >	< 978,600 >
Net Steam Consumption	13,000 lbs/hr	400,600
Cooling Water	1,645 gal/min	79,000
Net Annual Cost for Utilities		**$269,700**

* Based on cost data from Peters and Timmerhaus (1980), which are normalized to January, 1979, when the M & S Equipment Cost Index was 561.

** Adjusted on the basis of the M & S Equipment Cost Index of 791 for October, 1985 (*Chemical Engineering*, Jan. 20, 1986).

*** Assumes D.F.C. equal to five times the total cost of items ofmajor equipment.

VI. PROCESS COMPARISONS AND CONCLUSIONS

A. Cost Comparisons

Tables II and III summarize the capital and utilities costs for the **UCB Sulfur Recovery Process** and for conventional sulfur recovery technology. The estimated total purchased equipment price for the **UCBSRP** is $795,000 as of January 1979, when the M & S Equipment Cost Index (*Chemical Engineering* magazine) was 561. The value of this index at the end of the third quarter of 1985 was 791, making the current estimated purchase price of the equipment $1,121,000. If one assumes a ratio of 5.0 between direct fixed capital (D.F.C.) and the purchase price of the major equipment, the corresponding value of D.F.C. is $5,605,000. The estimated total purchased equipment price for the conventional technology is $1,302,000 as of 1979, which corresponds to $1,836,000 in October, 1985, and an estimated D.F.C. of $9,179,000. The cost of utilities for the **UCBSRP** is exceeded slightly by the credit for the high pressure steam produced, giving a net annual utility credit of $53,000. The net cost of utilities for the conventional technology is about $270,000 per year. The accuracy of absolute values of the capital estimates is probably no better than 30%. However, the accuracy of the value of the ratio of the two estimates should be considerably better since the processes are similar and the same estimating techniques were used for both. The D.F.C. for the **UCBSRP** is about 61% of that for conventional technology. The utilities cost figures depend, of course, on the unit costs assumed for electricity, steam and cooling water. The relative advantage shown for the **UCBSRP** would persist, however, for any reasonable set of unit costs because it is a net exporter of energy in the form of high pressure steam. The reasons for the cost advantages shown by the **UCBSRP** are discussed below.

B. Equipment Requirements

1. Process Similarities

Equipment requirements for the **UCBSRP** are less than for conventional processing, primarily because the **UCBSRP** has fewer processing steps. The following pieces of equipment for the **UCBSRP** have the same or very similar counterparts in conventional processing:

* The H_2S absorber is functionally the same for both processes, with nearly the same liquid flows and hence nearly the same pumping requirements. The H_2S absorbers and absorbant feed pumps are major cost items for both processes.

* The sulfur furnace and boiler in the **UCBSRP** are similar in size and duty to the Claus furnace and boiler in the conventional process. The **UCBSRP** uses sulfur as a fuel, but there are no hydrocarbons present and control of the air flow can be less precise since the combustion mixture is maintained sulfur-rich to prevent SO_3 formation.

* The SO_2 absorber of the UCBSRP treats a flow of gas similar to the gas stream treated in the DIPA absorber in the SCOT process.

* The sour water strippers in the two processes are also similar in size and duty.

2. *Process Differences*

The major equipment differences between the two processes are the following:

* The UCBSRP has a crystallization and centrifuge operation that requires operation of liquid-solid handling equipment. However, this feature makes the production of sulfur crystals feasible and eliminates the presence of H_2S and most other impurities in the sulfur product. In conventional processing sulfur is condensed as a liquid from a gas that contains H_2S and other potentially soluble contaminants. The presence of H_2S dissolved in liquid sulfur can be hazardous.

* Both processes require the same amount of air for H_2S combustion. However, the SCOT process requires about 44% additional air for fuel oxidation. All of the air for the conventional process must be supplied at a pressure substantially above that for the UCBSRP so that capital and operating costs for the air compressor are correspondingly greater.

* The solvent stripper for the UCBSRP is smaller than the DEA stripper in conventional processing. The H_2S leaving the DEA stripper is accompanied by much more water vapor than the total amount of water that must be stripped from the solvent in the UCBSRP, so the steam requirement for the DEA stripper is about 66% greater. The UCBSRP solvent stripper is operated at near-atmospheric pressure, whereas the DEA stripper is at 25 psia, so the diameters are about the same. The height shown for the DEA stripper is almost twice that of the solvent stripper, reflecting the greater fractionation requirement for stripping H_2S from a chemical solvent such as DEA.

* Conventional processing involves four different catalytic beds, all of which are subject to deactivation. The UCBSRP utilizes a catalyst that is part of the homogeneous liquid phase. No loss or deactivation of catalyst in the UCBSRP has yet been detected.

* Conventional processing drains liquid sulfur from four different condensers, whereas the UCBSRP has a single source of molten sulfur. As an additional option, the net sulfur product from the UCBSRP can be recovered as a coarse crystalline powder rather than as a liquid.

* Conventional processing has seven different heat exchangers that recover heat from hot gas streams, compared to a single such heat exchanger in the UCBSRP. The low heat-transfer coefficient typical of gas coolers requires considerable heat transfer area, which is reflected in the high costs for heat exchangers for this technology.

* Conventional processing has six different fired burners, compared to a single flame in the **UCBSRP.**

* Conventional processing has a desuperheater, a direct-contact condenser, a second amine stripper, and an H_2S stripper that have no counterparts in the **UCBSRP.**

* The design basis chosen for this comparison requires removal of only 90% of the H_2S from the gas passing through the primary absorber. To meet a much more stringent H_2S specification, the **UCBSRP** would require a larger reactor-crystallizer, K-1, and a somewhat larger flow of solvent to the primary absorber, but no significant increase in steam consumption by the solvent stripper. To meet the same specification both the size of the DEA stripper for the conventional process and its steam consumption would need to be increased substantially.

* The design basis chosen for this comparison also calls for treating a gas containing 5% H_2S at 2000 psia, which corresponds to a rather high partial pressure of H_2S. If either the mole fraction of H_2S or the total pressure were reduced while keeping the quantity of recovered sulfur constant, so that the volumetric gas flow in the primary absorber increased in inverse proportion to the partial pressure of the H_2S, both processes would require some modification. In both processes the diameter of the primary absorber would increase. In the **UCBSRP** the liquid flow in the primary absorber would increase since this flow depends on the physical solubility of the H_2S. The volumes of vessels K-1 and K-2 would also increase with the increased liquid flow. For the conventional technology the flow of DEA to the primary absorber would be nearly unchanged since it is a chemical solvent. However, the size and steam flow in the DEA stripper would need to increase in order to achieve the same H_2S specification in the treated gas.

C. Utilities Requirements

The liquid flows to the H_2S absorbers in the two processes are quite comparable and the electric power required by the two feed pumps is thus about the same. Because of the high pressure of the treated gas this power exceeds 300 kW. The air blower for the conventional process requires substantially more power than that for the **UCBSRP** because, as noted above, additional air is needed for the SCOT process and all of the air must be supplied at a relatively high pressure. The high-pressure steam produced by burning sulfur in the waste-heat boiler in the **UCBSRP** is about the same as that from burning H_2S in the Claus boiler. A small amount of additional steam is produced by the tail-gas boiler in the SCOT process. However, this additional steam is accompanied by a fuel cost that offsets about 40% of the high-pressure steam credit. No fuel is required by the **UCBSRP**. Low-pressure steam consumption and cooling-water usage do not differ greatly in the two processes.

D. Development Status

The design of the UCB Sulfur Recovery Process is based primarily on experimental data obtained in this laboratory (Demyanovich, 1984; Neumann, 1986; and Sciamanna, 1986), which are highly reproducible. The specification of carbon steel as a suitable material of construction is based on preliminary results from an ongoing corrosion study. A computer simulation of the whole process (Neumann, 1986) allows the expeditious consideration of design variations. The process configuration presented here is considered best for treating gases having a partial pressure of H_2S exceeding 50 psia. As noted in the **Introduction**, other configurations would be preferred for streams less concentrated in H_2S and will be the subject of later reports. In general, the flow of solvent in the primary absorber increases inversely with the pressure of the gas being treated and is insensitive to the concentration of H_2S in the gas. On the other hand, the sizes of the sulfur-handling facilities, the solvent stripper, the SO_2 absorber and the use of utilities are set almost entirely by the quantity of sulfur being recovered.

The designs of the crystallizer and of the secondary absorber are more speculative than those of the rest of the equipment because the experimental studies of these operations have just started. The uncertainties to be resolved by this research are the height required for the secondary absorber and the volume required for the crystallizer/reactor. Since these pieces of equipment do not represent a large fraction of the total equipment cost, the uncertainty in these costs is much smaller than the differential between the costs for the UCBSRP and those for conventional technology.

Acknowledgements

This work was supported by the Morgantown Energy Technology Center, Assistant Secretary for Fossil Energy, Office of Coal Utilization, Advanced Research and Technology Development, Division of Surface Coal Gasification, through the US Department of Energy under Contract DE-AC03-76SF00098. Fellowships for D.W. Neumann and S.F. Sciamanna provided part of their support and was made possible by grants from the Shell Co. Foundation and Chevron, USA, respectively. Samples of some of the solvents studied for use in this process were provided by Dow Chemical, USA.

VII. LITERATURE CITED

Demyanovich, Robert J., Ph.D. Dissertation, Department of Chemical Engineering, University of California, Berkeley, February, 1984.

Kohl, Arthur, and Fred Riesenfeld, "Gas Purification", 3rd Ed., Gulf Publ. Co., Houston, TX, 1979.

Neumann, Dan W., Ph.D. Dissertation, Department of Chemical Engineering, University of California, Berkeley, June, 1986.

Neumann, Dan W. and Scott Lynn, "The Kinetics of the Reaction of Hydrogen Sulfide and Sulfur Dioxide in Organic Solvents", *I&EC Process Design and Development*, 1986, *25*, 248.

Peters, Max S., and Klaus D. Timmerhaus, "Plant Design and Economics for Chemical Engineers", 3rd Edition, McGraw-Hill, New York, 1980.

Sciamanna, Steven F., Ph.D. Dissertation, Department of Chemical Engineering, University of California, Berkeley, Spring, 1986.

APPENDIX A

PROCESS DETAILS

UCB Sulfur Recovery Process

The flowsheet for the UCBSRP was shown in Figure 2, which is repeated on the following page, followed by Table A-I, which gives the component flows, temperatures and pressures for the numbered streams. Table A-II gives the utilities requirements for the process and Table A-III lists the individual items of major equipment by size and estimated cost. The methods by which these process flows, utilities requirements and costs were estimated is indicated in the discussion that follows.

A. Selection of Process Conditions

1. Solvent Flow in Primary Absorber, T-1

The solvent flow needed for the primary absorber was based on solubility data for H_2S in 2-(2-methoxy ethoxy) ethanol, the monomethyl ether of diethylene glycol, obtained by S.F. Sciamanna of this laboratory (1986). In the concentration range of interest for this process the solubility of H_2S follows Henry's Law:

$$p_{H_2S} = H_{H_2S} \times X_{H_2S}$$

where p_{H_2S} = the partial pressure of H_2S, psi

X_{H_2S} = the concentration of H_2S, lb-mole/1000 lbs solvent,

H_{H_2S} = the Henry's Law constant, psi-1000 lbs solvent/lb-mole,
= exp [9.204-1943.2/T]

and T = absolute temperature, ^{o}K.

The solubilities of hydrogen and the various hydrocarbons relative to H_2S were assumed to be the same as those reported by the Norton Company for Selexol polyglycol dimethylethers (see below).

The partial pressure of H_2S in the incoming gas is 100 psia, based on the total pressure of 2000 psia and the incoming mole fraction of 0.050. At the solvent flow chosen for the primary absorber in this design, the concentration of H_2S in the effluent solvent is 76% of the saturation value at the exit temperature. The solvent flow at the temperature of the bottom of the column is thus about 32% greater than the minimum flow needed to make the separation.

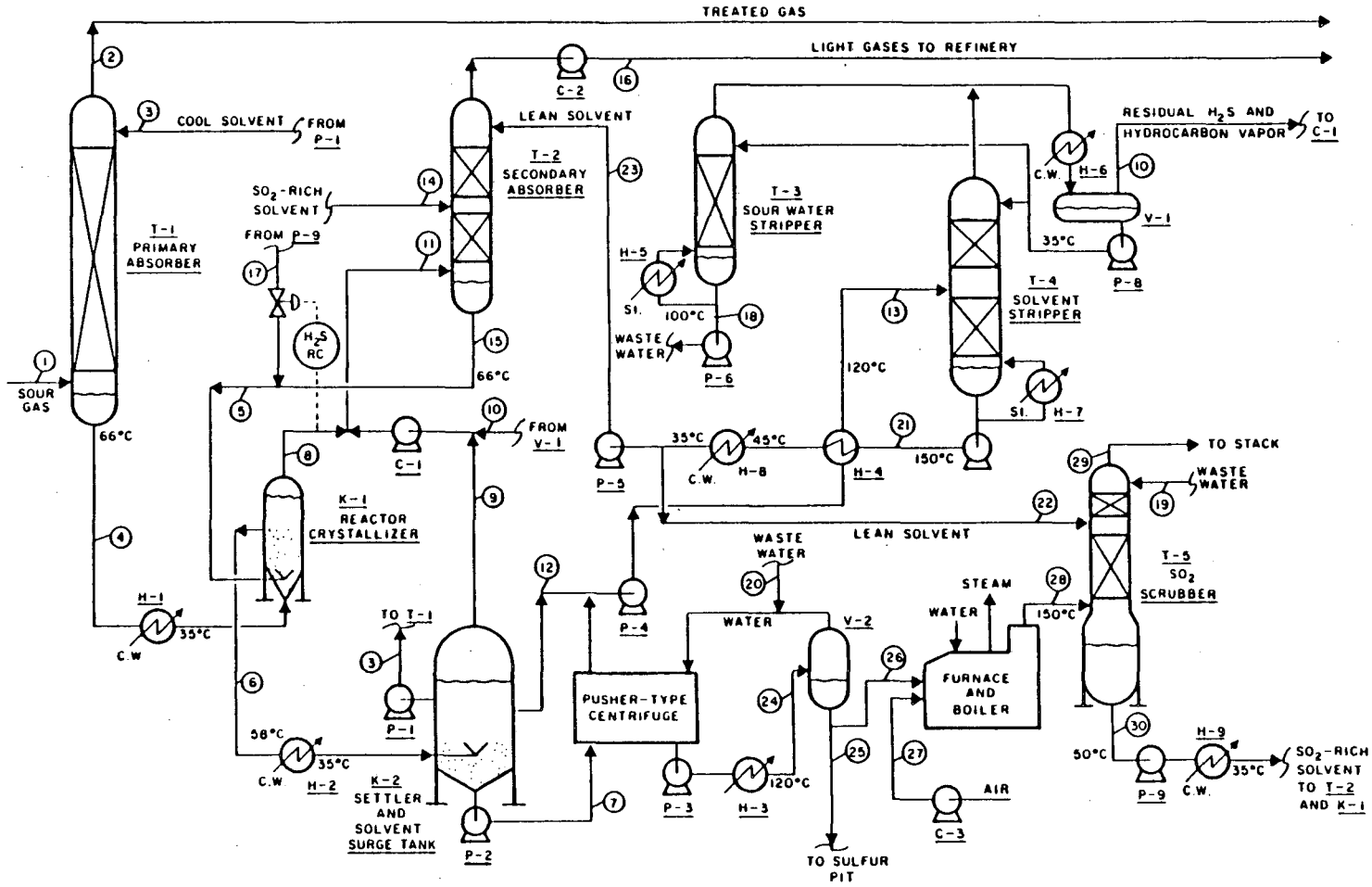

FIGURE 2
PROCESS FLOW DIAGRAM
UCB SULFUR RECOVERY PROCESS

XBL 861-341

Table A-I

Stream Flows and Conditions for UCB Sulfur Recovery Process

Stream:		1	2	3	4	5	6	7	8	9	10
H_2	lb-mol/hr	5088	5071	--	17	--	--	--	17	--	--
CH_4	'	831	817	--	14	--	--	--	14	--	--
C_2H_6	'	81	74	1	8	--	5	--	3	2	2
C_3H_8	'	57	53	8	12	20	26	3	6	4	14
C_4H_{10}	'	25	23	8	10	23	30	3	3	8	14
C_5^+	'	6	6	4	4	7	11	2	--	--	7
H_2S	'	321	29	1	293	--	2.9	0.4	0.1	0.1	1.8
SO_2	'	--	--	--	--	145	--	--	--	--	--
H_2O	'	3	--	261	264	127	681	104	--	--	--
S (dissolved)	'	--	--	12	12	23	73	5	--	--	--
S (solid or liquid)	'	--	--	--	--	--	397	438	--	--	--
Total	lb-mol/hr	6412	6073	295	634	345	1225.9	555.4	43.1	14.1	38.8
Solvent Flow											
	10^3 lb/hr	--	--	125	125	201	326	50	--	--	--
	(gal/min)	--	--	(250)	(250)	(402)	(652)	(100)	--	--	--
Pressure (lbs/sq in abs)		2000	2000	2000	140	130	130	30	130	15	15
Temperature (deg C)		35	35	35	66	38	58	35	58	35	35

Table A-I (Continued)

Stream Flows and Conditions for UCB Sulfur Recovery Process

Stream:		11	12	13	14	15	16	17	18	19	20
H_2	lb-mol/hr	17	--	--	--	--	17	--	--	--	--
CH_4	'	14	--	--	--	--	14	--	--	--	--
C_2H_6	'	7	2	2	--	--	7	--	--	--	--
C_3H_8	'	24	11	14	--	20	4	--	--	--	--
C_4H_{10}	'	25	11	14	--	23	2	--	--	--	--
C_5^+	'	7	5	7	--	7	--	--	--	--	--
H_2S	'	2	1.4	1.8	--	--	--	--	--	--	--
SO_2	'	--	--	--	7	6	--	139	--	--	--
H_2O	'	--	316	470	6	8	--	119	370	50	50
S (dissolved)	'	--	15	20	1	4	--	19	--	--	--
S (solid or liquid)	'	--	--	--	--	--	--	--	--	--	--
Total	lb-mol/hr	96	361.4	528.8	14	68	44	277	370	50	50
Solvent Flow	10^3 lb/hr	--	151	201	10	11	--	190	--	--	--
	(gal/min)	--	(302)	(402)	(20)	(22)	--	(380)	--	--	--
Pressure (lbs/sq in abs)		130	15	15	130	130	200	130	15	15	50
Temperature (deg C)		50	35	120	35	66	35	100	100	100	100

Table A-I (Continued)

Stream Flows and Conditions for UCB Sulfur Recovery Process

Stream:		21	22	23	24	25	26	27	28	29	30
N_2	lb-mol/hr	--	--	--	--	--	--	549	549	549	--
O_2	'	--	--	--	--	--	--	146	--	--	--
SO_2	'	--	--	--	--	--	--	--	146	0.001	146
H_2O	'	100	100	--	1557	--	--	--	--	25	125
S (dissolved)	'	20	20	--	--	--	--	--	--	--	--
S (solid or liquid)	'	--	--	--	438	292	146	--	--	--	--
Total	lb-mol/hr	120	120	--	1995	292	146	695	695	574	291
Solvent Flow											
10^3 lb/hr		201	200	1	--	--	--	--	--	--	200
(gal/min)		(402)	(400)	(2)	--	--	--	--	--	--	(400)
Pressure (lbs/sq in abs)		30	25	130	50	15	15	16	15.5	15	15
Temperature (deg C)		150	35	120	120	120	120	30	150	30	50

Table A-II

UTILITIES USE AND COSTS

UCB Sulfur Recovery Process

Electric Power		
Flash Gas Compressor, C-1	60	kW
Light Gas Compressor, C-2	9	
Air Blower, C-3	58	
Lean Solvent Pump, P-1	310	
Solvent Forwarding Pumps; P-4, P-7, P-9	48	
Small Pumps; P-2, P-3, P-5, P-6, P-8	5	
Total	490	kW
Annual* Cost @ $0.07/kW-hr	**$274,400**	
Steam produced, 615 psia		
Waste heat boiler	< 18,000 >	lb/hr
Annual* Credit @ $5.25/10^3 lb	**< $756,000 >**	
Steam consumed, 165 psia		
Sulfur Melter, H-3	1100	lb/hr
Solvent Stripper Reboiler, H-7	8700	
Sour Water Stripper Reboiler, H-5	140	
Total steam consumed	9940	lb/hr
Annual* Cost @ $4.50/10^3 lb	**$357,800**	
Cooling Water		
Solvent Coolers; H-1, H-2, H-8, H-9	1125	gal/min
Solvent Stripper Condenser, H-6	345	
Total cooling water usage	1470	gal/min
Annual* Cost @ $0.10/10^3 gal	**$70,600**	
Total Net Annual* Credit for Utilities	**< $53,200 >**	

* Annual costs based on an operating rate of 8,000 hrs/yr.

Table A-III

MAJOR EQUIPMENT LIST

UCB Sulfur Recovery Process

EQUIPMENT ITEM	SIZE	BASIS FOR COST ESTIMATION	PURCHASED COST
H_2S Absorber, T-1	d = 4 ft h = 35 ft t = 4.5 in	Vessel Weight, 65,000 lbs Carbon steel	$80,000
Secondary Absorber, T-2	d = 1 ft h = 35 ft p = 150 psia	Column Height, Diameter	10,000
Sour Water Stripper, T-3	d = 10 in h = 20 ft p = 15 psia	Column Height, Diameter	2,500
Solvent Stripper, T-4	d = 4 ft h = 20 ft p = 15 psia	Column Height, Diameter	24,000
SO_2 Scrubber, T-5	d = 54 in h = 40 ft p = 15 psia	Column Height, Diameter	40,000
Crystallizer, K-1	d = 10 ft h = 10 ft t = 1.2 in	Vessel Weight, Carbon Steel 16,000 lbs	30,000
Solvent Storage and Settler, K-2	p = 15 psia	Tank Volume, 18,000 gal.	20,000
Reflux Drum, V-1	d = 2 ft L = 6 ft	Vessel Volume, 150 gal.	1,500
Sulfur Decanter, V-2	d = 3 ft h = 6 ft p = 50 psia	Vessel Weight, 1,000 lbs.	6,000
Flash Gas Compressor, C-1	p_1 = 15 psia p_2 = 130 psia Flow = 365 ft^3/m	Two-stage reciprocating, with spare, 60 kW.	60,000
Light Gas Compressor, C-2	p_1 = 130 psia p_2 = 200 psia Flow = 35 ft^3/m	Single-stage reciprocating, with spare, 9 kW	$24,000
Air Blower, C-3	p_1 = 14 psia p_2 = 16.7 psia Flow = 4170 ft^3/m	Turboblower, with spare. 56 kW	30,000

Table A-III (Continued)

EQUIPMENT ITEM	SIZE	BASIS FOR COST ESTIMATION	PURCHASED COST
Centrifuge	20 inch dia.	Pusher-type	50,000
Pump, Solvent to Primary Absorber, P-1	250 gpm, 2000 psi	API 610, Vertical inline with spare. 310 kW	100,000
Pump, Solvent Sulfur Slurry to Centrifuge, P-2	30 gpm, 25 psi	Chemical inline with spare. 1 kW	2,000
Pump, Water-Sulfur Slurry to Decanter, P-3	30 gpm, 25 psi	Chemical inline with spare. 1 kW	2,000
Pump, Solvent to Stripper, P-4	410 gpm, 30 psi	Chemical inline with spare. 8 kW	4,000
Pump, Lean Solvent to Sec. Absorber, P-5	2 gpm, 150 psi	API 610, Vertical inline with spare. 0.5 kW	2,000
Pump, Waste Water, P-6	14 gpm, 30 psi	Chemical inline with spare. 0.5 kW	2,000
Pump, Lean Solvent to SO_2 Absorber, P-7	400 gpm, 30 psi	Chemical inline with spare. 8 kW	$4,000
Pump, Water to Sour Water Stripper, P-8	14 gpm 30 psi	Chemical inline with spare. 0.5 kW	2,000
Pump, SO_2 Solution to K-1 P-9	400 gpm, 130 psi	API 610, Vertical inline with spare. 32 kW	10,000
Furnace and Waste-Heat Boiler	18×10^6 Btu/hr 3,500 ft^2	Cost as a package boiler with U-tube exchanger, carbon steel.	135,000

Table A-III (Continued)

EQUIPMENT ITEM	SIZE	BASIS FOR COST ESTIMATION	PURCHASED COST
T-1 Bottoms Cooler, H-1	1,000 ft^2 125 gpm c.w.	Heat Exchanger Fixed-tube, carbon steel.	12,000
Slurry Cooler H-2	1,000 ft^2 400 gpm c.w.	Heat Exchanger Fixed-tube with spare, carbon steel.	24,000
Slurry Melter, H-3	230 ft^2 150 psia steam, 1100 lbs/hr	Heat Exchanger U-tube, carbon steel.	6,000
Solvent Preheater, H-4	Two @ 5000 ft^2	Counter-current exchanger, fixed-tube, carbon steel.	70,000
Sour Water Reboiler, H-5	40 ft^2 165 psia steam, 140 lbs/hr	Heat Exchanger Fixed-tube, carbon steel.	1,000
Stripper Condenser, H-6	600 ft^2 345 gpm c.w.	Heat Exchanger U-tube, carbon steel.	9,000
Stripper Reboiler, H-7	1,300 ft^2 165 psia steam, 8700 lbs/hr	Heat Exchanger w. exp. joint, carbon steel.	$15,000
Solvent Cooler, H-8	500 ft^2 200 gpm c.w.	Heat Exchanger U-tube, carbon steel.	8,000
SO_2 Solution Cooler, H-9	600 ft^2 400 gpm c.w.	Heat Exchanger U-tube, carbon steel.	9,000
Total cost of major equipment (1979) *			**$795,000**
Adjusted cost of major equipment **			**$1,121,000**
Estimated Direct Fixed Capital ***			**$5,605,000**

* Based on cost data from Peters and Timmerhaus (1980), which are normalized to January, 1979, when the M & S Equipment Cost Index was 561.

** Adjusted on the basis of the M & S Equipment Cost Index of 791 for October, 1985 (*Chemical Engineering*, Jan. 20, 1986).

*** Assumes D.F.C. equal to five times total cost of items of major equipment.

2. Estimation of Co-absorption in Primary Absorber, T-1.

Since the solubility of light gases is low and the concentrations of propane and heavier hydrocarbons in the feed is small, the total hydrocarbon solubility in the solvent stream is not a large factor in the overall design. Based on the data provided by the Norton Company, relative Henry's Law constants for the other components in the sour gas were estimated to be:

Gas	H_{Gas}/H_{H_2S}
Hydrogen	670 at 25°C (invariant)
Methane	134
Ethane	18
Propane	8.8
Butane	4.2
Pentane	1.6

Since all of the gases are less soluble than H_2S, the solvent leaving the primary absorber is assumed to be saturated with each at its partial pressure in the feed gas and at the temperature of the exiting liquid. Improved values for these gas solubilities are being obtained by Sciamanna (1986).

3. Calculation of Temperature Rise in Primary Absorber

The temperature rise in the absorber is the result of three effects, the absorption of H_2S, the absorption of hydrocarbons, and the absorption of water. The heat of solution of H_2S was estimated by applying the Clausius-Clapeyron equation to the solubility data. The heat of solution of H_2 is negligible. The molar heats of solution of the hydrocarbons (HC) were assumed equal to that of H_2S as a rough approximation. The heat of solution of water was taken equal to its heat of condensation at ambient temperature.

Component	Amount Adsorbed	Heat of Solution	Heat Released
H_2S	292 lb-moles/hr	6,950 Btu/lb-mole	2.03×10^6 Btu/hr
H_2O	3 lb-moles/hr	18,000 Btu/lb-mole	0.05×10^6 Btu/hr
HC	21 lb-moles/hr	6,950 Btu/lb-mole	0.15×10^6 Btu/hr
Total	316 lb-moles/hr		2.23×10^6 Btu/hr

In an absorber most of the heat of solution heats the stream with the larger heat capacity. The exiting temperature of the stream with the smaller heat capacity approaches the inlet temperature of the larger stream. In the primary absorber, T-1, both streams enter at 35°C. The heat capacity of the liquid stream is

$$125{,}000 \text{ lb/hr} \times 0.5 \text{ Btu/lb } ^{o}F = 62{,}500 \text{ Btu}/^{o}F,$$

while the heat capacity of the gas stream is about

$$6{,}412 \text{ lb-mole/hr} \times 7.5 \text{ Btu/mole } ^{o}F = 48{,}100 \text{ Btu}/^{o}F.$$

The bottoms liquid thus leaves the column at a temperature of about 66°C while the gas leaves the top of the column at 35°C.

4. Secondary Absorber, T-2

The purpose of the secondary absorber is to scrub residual H_2S from the hydrocarbons and hydrogen co-absorbed in the primary absorber. Solvent rich in SO_2 is fed to the middle of the column to enhance H_2S absorption by chemical reaction. The top feed to the secondary absorber is cool, lean solvent. The purpose of this stream is to reabsorb any SO_2 that is stripped from the mid-column feed and its flow is about twice the minimum necessary to scrub the light gases essentially free of SO_2. The reactive absorption of H_2S by solutions of SO_2 is currently under study in this laboratory. A more accurate estimation of the height of column T-2 will be possible after this work is completed.

The bottoms temperature was calculated from the column heat balance, assuming that the overhead vapor is at the same temperature as the incoming lean solvent. The bottoms temperature is, coincidentally, also 66°C, 31°C above the incoming solvent temperature. This temperature rise results primarily from the heat of solution of the propane and higher hydrocarbons that are reabsorbed from the gas being scrubbed.

5. Crystallizer, K-1

The two feeds to the crystallizer, K-1, are the solution of H_2S from the primary absorber and a solution of SO_2 from the SO_2 absorber. Under process conditions the liquid-phase Claus reaction is essentially complete in about 10 seconds. The heat of reaction increases the mixture temperature from about 35°C to 58°C. The H_2S solution enters the crystallizer near the bottom. It mixes with SO_2 solution and reaction occurs in a fluidized bed of small sulfur crystals that seed further sulfur crystallization. Most of the sulfur formed by reaction in K-1 precipitates, the rest remains in solution. The bulk of the solid sulfur will have a particle size greater than 100 microns. The method of controlling crystal-size distribution is currently under study in this laboratory. A more accurate estimate of the size of the tank needed for the reactor/crystallizer will be possible after this work is completed.

The flow of SO_2 solution to K-1 is controlled, in response to monitoring the H_2S content of the flash gas leaving K-1, to react away about 99% of the H_2S in the stream from the primary absorber. The small excess of H_2S is maintained because it is impractical to try to attain the exact stoichiometric ratio between the two reactants and because

residual H_2S is easier to strip from solution than residual SO_2 would be.

6. Solvent Surge Tank and Settler, K-2

The slurry of sulfur crystals in solvent leaving crystallizer K-1 is cooled in exchanger H-2 to the lowest temperature in the system, about 35°C, before entering vessel K-2. There may be some deposit of sulfur on the tubes in H-2, so a spare is provided and provision would be made to dissolve the deposited sulfur with hot solvent as needed. K-2 serves both as the system surge tank and as a gravity settler for the sulfur. Because of the large particle size the sulfur crystals settle rapidly. The bottoms slurry from K-2 is fed to the centrifuge for sulfur recovery and washing. This slurry is about 20 wt% solids.

The solvent flow to the primary absorber, T-1, is pumped directly from K-2, rather than from Stripper T-4, since the H_2S
content of the solvent is low enough to achieve the H_2S removal needed in T-1. Some hydrocarbon vapor and H_2S are flashed from the liquid as it enters K-2, which is only slightly above atmospheric pressure. This vapor stream joins that coming from stripper T-4 and is compressed to 130 psia and sent to the secondary absorber, T-2.

7. Solvent Stripper, T-4

The feed to the solvent stripper, T-4, results from mixing a liquid stream from the top of the surge tank, K-2, with the effluent stream from the centrifuge. The combined streams contain some dissolved hydrocarbons, water, unreacted H_2S and dissolved sulfur. The solvent must be stripped of most of the water to maintain the water balance in the system. Residual hydrocarbon and unreacted H_2S will also be removed quite effectively in T-4 since the flow of water vapor is about 10 times the minimum needed to strip H_2S, the least volatile of these components, from solution.

The feed is preheated to 140°C by exchange with the stripped solvent, then fed to the middle of the solvent stripper. A small part of the water condensed from the overhead vapor is fed to the top of the stripper as a reflux to prevent loss of solvent vapor. The stripper is reboiled with medium pressure steam to a bottoms temperature of 150°C. At this temperature, at atmospheric pressure, the solvent is expected to have a maximum water content of 1 wt%.

The overhead vapor from the solvent stripper is condensed by exchange with cooling water, then separated into liquid water and stripper, T-3. Part of the "waste" water leaving T-3 is sent to the centrifuge to wash the sulfur and part is used in the SO_2 scrubber to minimize solvent vapor losses. Excess water is sent to disposal. Uncondensed hydrocarbon vapor and H_2S join the vapor stream from the surge tank, K-2, and are compressed and sent to the secondary absorber, T-2.

8. Centrifuge

A pusher-type centrifuge is used to separate the solid sulfur from the slurry of sulfur in solvent pumped to it from vessel K-2. The sulfur cake formed in the centrifuge is washed with water before being discharged to produce a sulfur-in-water slurry. The flow of the water wash is based on the assumption that solvent holdup on the crystals is 5 wt%. Wash rate is set at twice the volume of liquid held up on the crystals. It is assumed that this wash rate is sufficient to completely displace the original liquid on the solids. The rinse water is combined with the solvent stream and sent to stripper T-4.

The slurry is pumped to a pressure high enough (50 psia) to prevent vaporization of water when the slurry is heated above the melting point of sulfur to permit liquid-liquid separation of the final sulfur product. Water from this separation is mixed with cool water from the solvent stripper and returned to the centrifuge. Since only the sulfur burned in the furnace must be melted, one might, as an alternative, recover the net sulfur product as water-wet solid crystals.

9. Sulfur Furnace and SO_2 Scrubber, T-5

One-third of the sulfur from the centrifuge is burned in a furnace to generate the SO_2 needed to produce the SO_2 solution for the process . Air is fed from a blower at a rate controlled to give the desired amount of SO_2. Sulfur is fed to the furnace in excess to assure that there is no formation of SO_3. The excess sulfur is condensed in an economizer at the tail end of the waste heat boiler and is recycled back to the furnace. High-pressure steam (600 psia) may be generated in the boiler.

Combustion gas from the furnace is fed to the bottom of the SO_2 scrubber, T-5. Cool lean solvent, stripped free of H_2S and containing no SO_2, is used to reduce the SO_2 content of the combustion gas to a few parts per million while generating a 5 wt% solution of SO_2. The temperature of the solvent rises about 15°C from the heat of solution of SO_2 and the sensible heat of the entering gas. The concentration of SO_2 in the exiting solvent is about 60% of the saturation value for the entering gas.

Water from the sour water stripper, T-3, is fed to a knock-down section at the top of T-5 to prevent loss of solvent vapor in the stack gas.

10. Heat Exchangers.

Heat exchangers were sized by assuming a heat-transfer coefficient of 100 Btu/hr-ft^2-°F for condensing steam and for flowing liquid streams. For cooling gas streams and for partial condensation of vapors in the presence of non-consensibles the value taken was 20 Btu/hr-ft^2-°F. These are felt to be conservative values that one would wish to improve upon in the more advanced stages of a design.

APPENDIX B

PROCESS DETAILS

Conventional Sulfur Recovery Technology

The process flow diagram for the conventional technology chosen for this process comparison is shown in Figure 3, which is repeated on the following page. The component flows, temperatures and pressures for the numbered streams are given in Table B-I. Table B-II lists the utility requirements and costs for this process configuration. The sizes and costs of the major items of equipment are listed in Table B-III. Because this is conventional technology, less discussion is given below of the design details. The reader is referred to Kohl and Riesenfeld (1979) for additional information.

1. DEA Plant

The DEA circulation rate in the amine plant is set to be 25% greater than the minimum flow needed to absorb the H_2S based on equilibrium of rich DEA with the incoming feed gas. Stripper reboiler heat input was set at 750 Btu/gal of bottoms solution. This heat input is selected based on experience in the design of successful amine plants. Typical heat input to ethanol amine strippers varies between 600 and 1000 Btu/gal. The choice of a heat input at the lower end of commercial experience is justified by the loose specification for residual H_2S content in the treated gas.

2. Claus Plant

The total air rate for the Claus plant is set to give the stoichiometric one-half mole of oxygen per mole of H_2S in the combined feed to the plant. Air is distributed to the inline burners as required to meet reactor inlet temperature requirements. The balance of the air is sent to the reaction furnace. The combustion of H_2S in the inline burners goes all the way to SO_2, rather than to sulfur. A small amount of excess H_2S is fed to the inline burners to prevent SO_3 formation.

The reaction products from the furnace were calculated assuming that the reaction is kinetically frozen when the mixture is cooled in the waste-heat boiler to a temperature of 760°C. The purpose of this assumption is to allow the estimation of the fraction of the total sulfur that is formed at this point in the process. The design of the rest of the Claus plant is not greatly affected by the value assumed for the temperature at which no further reaction occurs.

Each catalytic reactor was designed for an inlet temperature of 225°C and a space velocity of 1500 hr^{-1} based on successful commercial experience. Catalyst depth in each reactor is 4 feet. Reactors are assumed to be adiabatic. Sulfur condensers were designed

to generate steam at 70 psia. This pressure level is arbitrary, and is set slightly higher than the pressure needed in the amine reboilers in the DEA and SCOT plants.

3. SCOT Process

The fuel and air flows needed for the reducing-gas generator in the SCOT plant are based on heating the gas stream from the Claus plant to 340°C while providing enough reducing material to reduce all sulfur compounds to H_2S and to provide additional hydrogen equal to about 2% of the stream composition. The hydrogenation reactor was assumed arbitrarily to have the same size as the Claus reactors because of a lack of kinetic data for the system. In the design of an actual plant, reactor size would be set based on commercial data available from the process licensor.

The circulation rate of DIPA was set 20% higher than the minimum flow that corresponds to loading the solution to equilibrium with the incoming gas. To simplify calculations, all of the H_2S and none of the CO_2 were assumed to be absorbed. As a result this section of the SCOT process is underdesigned. The amine reboiler is sized for 1000 Btu/gal of circulation, at the top end of the typical range for ethanolamine systems, because of the stringent specification for H_2S in the tail gas stream that is vented to the atmosphere.

The heat exchangers for all three parts of the process were sized by assuming the same heat-transfer coefficients as for the **UCBSRP**: 100 Btu/hr-ft^2-°F for condensing steam and flowing liquids, 20 Btu/hr-ft^2-°F for cooling gases and condensing vapors that are mixed with non-condensibles. For the sulfur condensers, the heat-transfer tubes were sized at 1.5 to 2 inches to minimize the gas-side pressure drop.

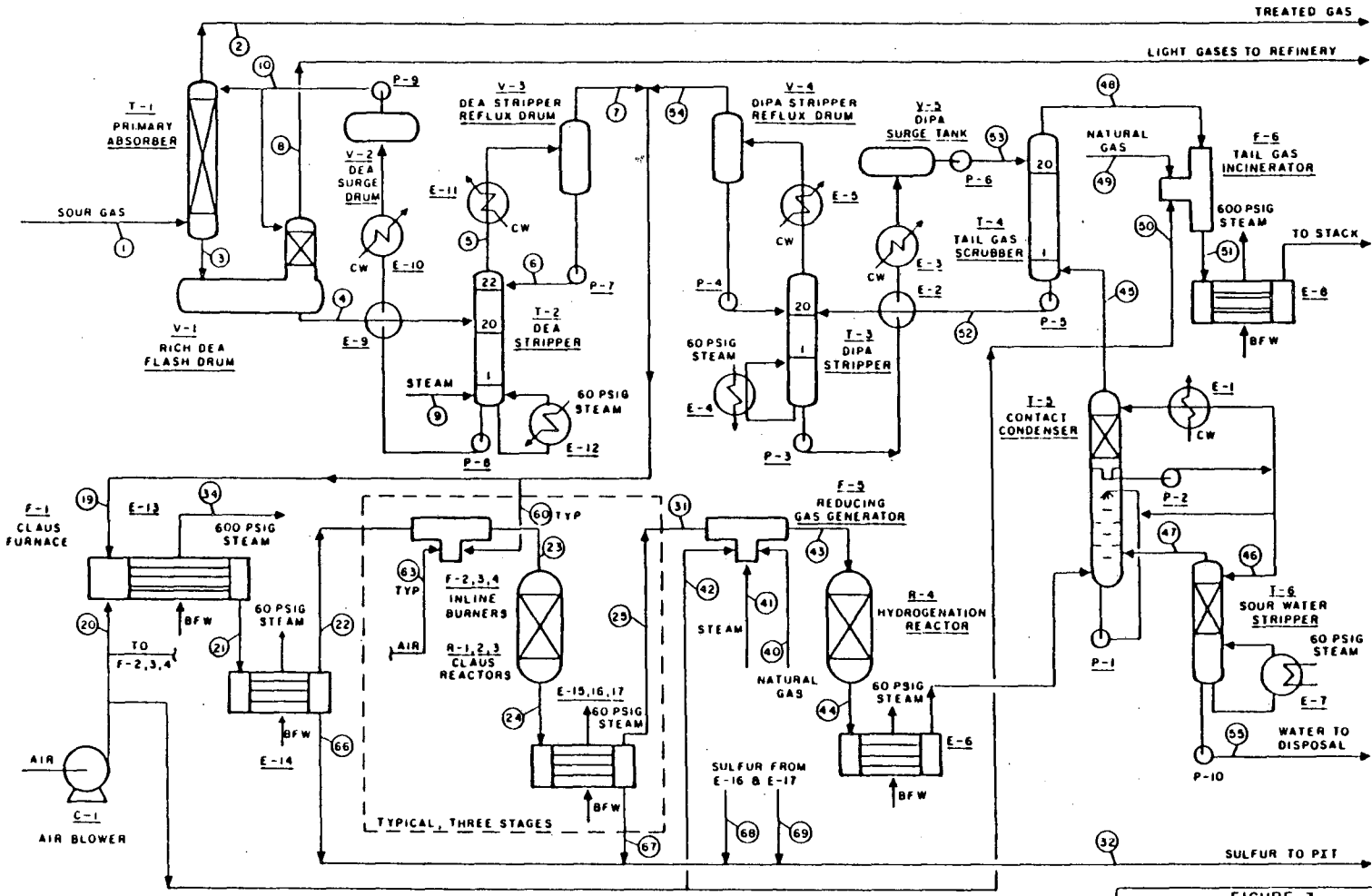

FIGURE 3
PROCESS FLOW DIAGRAM
CONVENTIONAL PROCESSING

XBL 861-342

Table B-I

Stream Flows and Conditions for Conventional Processing

DEA Absorber/Stripper

Stream:		1	2	3	4	5	6	7	8	9	10
H_2	lb-mol/hr	5088	5081	7	--	--	--	--	7	--	--
CH_4	'	831	831	--	--	--	--	--	--	--	--
C_2H_6	'	81	81	--	--	--	--	--	--	--	--
C_3H_8	'	57	56	1	--	--	--	--	1	--	--
C_4H_{10}	'	25	24	1	--	--	--	--	1	--	--
C_5^+	'	6	6	--	--	--	--	--	--	--	--
H_2S	'	321	29	295	295	292	--	292	--	--	3
H_2O (vapor)	'	3	3	--	--	254	233	21	--	21	--
Total	lb-mol/hr	6412	6111	304	295	546	233	313	9	21	3
Flow of 25% DEA											
10^3 lb/hr		--	--	150	150	--	--	--	--	--	150
(gal/min)		--	--	(300)	(300)	--	--	--	--	--	(300)
Pressure (lbs/sq in abs)		2000	2000	2000	200	30	30	25	200	35	2000
Temperature (deg C)		35	35	54	54	96	50	50	54	143	35

Table B-I
(Continued)

Claus Plant

Stream:		19	20	21	22	23	24	25	26	27	28
N_2	lb-mole/hr	--	509.4	509.4	509.4	529.7	529.7	529.7	550.0	550.0	550.0
O_2	'	--	135.4	--	--	--	--	--	--	--	--
H_2S	'	292.4	--	85.2	85.2	85.2	27.2	27.2	27.2	11.2	11.2
SO_2	'	--	--	31.8	31.8	35.4	6.4	6.4	10.0	2.0	2.0
H_2O	'	20.9	11.4	238.9	238.9	243.2	301.2	301.2	305.5	321.5	321.5
S (vapor or liquid)*	'	--	--	175.4	3.1	3.1	90.1	3.1	3.1	27.1	3.2
Total	lb-mol/hr	313.3	656.2	1040.7	868.4	896.6	954.6	867.6	897.0	911.8	887.9
Temperature (deg C)		50	25	315	168	228	325	168	226	255	168

Claus Plant
(Continued)

Stream:		29	30	31	32	33	34	35
N_2	lb-mole/hr	570.3	570.3	570.3	--	--	--	--
O_2	'	--	--	--	--	--	--	--
H_2S	'	11.2	5.2	5.2	--	--	--	--
SO_2	'	5.6	2.6	2.6	--	--	--	--
H_2O	'	325.8	331.8	332.6	--	1445	1045	400
S (vapor or liquid)*	'	3.6	12.6	3.5	292	--	--	--
Total	lb-mol/hr	916.5	922.5	914.5	292	1445	1045	400
Temperature (deg C)		228	239	168	168	104	254	156

* Sulfur molecules vary from S_2 to S_8. Flows are given as equivalent S_1.

Table B-I *(Continued)*

SCOT Process

	Stream:	40	41	42	43	44	45	46	47
H_2	lb-mol/hr	--	--	--	24.2	19.2	19.2	--	--
CH_4	'	17.6	--	--	--	--	--	--	--
CO	'	--	--	--	6.6	--	--	--	--
CO_2	'	--	--	--	11.0	17.6	17.6	--	--
N_2	'	--	--	74.5	644.8	644.8	644.8	--	--
O_2	'	--	--	19.8	--	--	--	--	--
H_2S	'	--	--	--	5.2	11.6	11.6	0.2	0.2
SO_2	'	--	--	--	2.6	--	--	--	--
H_2O	'	--	17.6	1.6	362.8	361.4	86.2	283.2	8.0
S (vapor or liquid)	'	--	--	--	3.8	--	--	--	--
Total	lb-mol/hr	17.6	17.6	95.9	1061.0	1054.6	779.4	283.4	8.2
Temperature (deg C)		25	156	25	335	369	50	63	103

SCOT Process
(Continued)

	Stream:	48	49	50	51	52	53	54	55
H_2	lb-mol/hr	19.2	--	--	--	--	--	--	--
CH_4	'	--	12.0	--	--	--	--	--	--
CO_2	'	17.6	--	--	29.6	--	--	--	--
N_2	'	644.8	--	144.4	789.2	--	--	--	--
O_2	'	--	--	38.4	4.8	--	--	--	--
H_2S	'	--	--	--	--	11.6	--	11.6	--
H_2O	'	3.2	--	3.2	49.6	--	--	0.8	275.2
Total	lb-mol/hr	684.8	12.0	186.0	955.4	11.6	--	12.4	275.2
Flow of 30% DIPA									
10^3 lb/hr		--	--	--	--	62.1	62.1	--	--
(gal/min)		--	--	--	--	(124.2)	(124.2)	--	--
Temperature (deg C)		50	25	25	538	50	50	50	104

Table B-I
(Continued)

SCOT Process
(Continued)

Stream:		60	61	62	63	64	65	66	67	68	69
N_2	lb-mole/hr	--	--	--	20.3	20.3	20.3	--	--	--	--
O_2	'	--	--	--	5.4	5.4	5.4	--	--	--	--
H_2S	'	3.6	3.6	3.6	--	--	--	--	--	--	--
SO_2	'	--	--	--	--	--	--	--	--	--	--
H_2O	'	0.3	0.3	0.3	0.4	0.4	0.4	--	--	--	--
S (vapor or liquid)*	'	--	--	--	--	--	--	172	87	23.9	9.1
Total	lb-mol/hr	3.9	3.9	3.9	26.1	26.1	26.1	172	87	24	9
Temperature (deg C)		50	50	50	25	25	25	168	168	168	168

* Sulfur molecules vary from S_2 to S_8. Flows are given as equivalent S_1.

Table B-II

UTILITIES USE AND COSTS

Conventional Sulfur Recovery Process

Electric Power	
Forwarding Pumps, P-5 to P-8, P-10	11.5 kW
Lean DEA Pump, P-9	372.0
Air Blower, C-1	239.0
Forwarding Pumps, P-1 to P-4	27.0
Total electric power	649.5 kW
Annual* Cost @ $0.07/kW-hr	**$363,700 per year**
Fuel Consumption (equivalent methane)	
Reducing Gas Generator, F-5	17.6 lb mol/hr
Tail-Gas Incinerator, F-6	12.0
Total fuel consumed	29.6 lb mol/hr
	(270 000 std cu ft/day)
Annual* Cost @ $4.50/10^3 std ft^3	**$405,000**
Steam Produced, 615 psia	
Claus Furnace, E-13	< 18,800 > lb/hr
Tail-Gas Boiler, E-8	< 4,500 >
Total steam produced	< 23,300 > lb/hr
Annual* Credit @ $5.25/10^3 lbs	**< $978,600 >**
Net Steam Consumed, 75 psia	
DEA Reboiler, E-12	14,500 lb/hr
DEA Sparger, Stream 9	390
Sulfur Condensers, E-15, 16, 17	< 7,200 >
Low-Pressure Steam Generator, E-6	< 2,900 >
DIPA Reboiler, E-4	7,400
Sour Water Stripper Reboiler, E-7	500
Reducing Gas Generator, Stream 41	320
Net steam consumed	13,010 lb/hr
Annual* Cost @ $3.85/10^3 lbs	**$400,600**
Cooling Water	
Condensers, E-5, E-11	340 gal/min
Amine Coolers, E-3, E-10,	635
Contact Condenser Cooler, E-1	670
Total cooling water usage	1,645 gal/min
Annual* Cost @ $0.10/10^3 gal	**$79,000**
Net Annual* Utilities Cost	**$269,700**

* Annual cost based on an operating rate of 8,000 hrs/yr.

Table B-III

MAJOR EQUIPMENT LIST FOR CONVENTIONAL PROCESS

DEA Absorber/Stripper Operation

EQUIPMENT ITEM	SIZE	BASIS FOR COST ESTIMATION	PURCHASED COST
Primary H_2S Absorber T-1	d = 3 ft h = 35 ft t = 4.25 in	Vessel Weight 65,000 lbs. Carbon Steel	$80,000
Flash Drum V-1	d = 6.5 ft h = 20 ft t = 1 in	Vessel Weight 25,000 lbs. Carbon Steel	40,000
DEA Stripper T-2	d = 4 ft h = 50 ft t = 0.5 in	Vessel Weight 20,000 lbs. Carbon Steel	35,000
Lean DEA Surge Tank V-2	d = 8 ft L = 20 ft	Vessel Volume 7,500 gals.	12,000
Reflux Drum V-3	d = 8 ft L = 20 ft t = 0.5 in	Vessel Weight 1,400 lbs Carbon Steel	9,000
DEA Stripper Reboiler E-12	2,500 ft^2 75 psia steam 14,500 lbs/hr	Heat Exchanger U-tube Stainless Steel	65,000
Rich-Lean DEA Heat Exchanger E-9	2 @ 2,500ft^2	Heat Exchanger Fixed tube Carbon Steel	50,000
Trim Cooler E-10	2,000 ft^2 415 gpm c.w.	Heat Exchanger Admiralty tubes	26,000
Condenser E-11	1,000 ft^2 200 gpm c.w.	Heat Exchanger Admiralty tubes	17,000
Reflux Pump P-7	10 gpm 30 psi	Chemical inline with spare; 1 kW	2,000
DEA Forwarding Pump, P-8	300 gpm 30 psi	Chemical inline with spare; 6 kW	4,000
DEA Pump P-9	300 gpm 2,000 psi	API 610, vertical inline with spare. 372 kW	100,000
	DEA Absorber/Stripper Operation Subtotal		**$436,000**

Table B-III *(Continued)*

Claus Plant

EQUIPMENT ITEM	SIZE	BASIS FOR COST ESTIMATION	PURCHASED COST
Air Blower C-1	p_1 = 14.7 psia p_2 = 30 psia Flow = 5,960 cu ft/min	Motor Drive Single Machine Includes capacity for tail gas plant 240 kW	$100,000
Furnace and Waste-Heat Boiler F-1 and E-13	18×10^6 Btu/hr 3,700 ft^2	Package boiler for 615 psia steam, includes U-tube exchanger, Carbon steel.	137,000
Sulfur Condenser E-14	2,600 ft^2 75 psia steam 2,400 lbs/hr	Heat Exchanger Fixed-tube, 1.5 in. dia. tubes, Carbon steel.	33,000
Sulfur Condenser 2	2,200 ft^2 75 psia steam 2,000 lbs/hr	Heat Exchanger Fixed-tube, 1.5 in. dia. tubes, Carbon steel.	30,000
Sulfur Condenser 3 E-16	1,600 ft^2 75 psia steam 1,500 lbs/hr	Heat Exchanger Fixed-tube, 1.5 in. dia. tubes, Carbon steel.	24,000
Sulfur Condenser 4 E-17	1,400 ft^2 75 psia steam 1,300 lbs/hr	Heat Exchanger Fixed-tube, 1.5 in. dia. tubes, Carbon steel.	22,000
Converters R-1, 2, 3	d = 8 ft h = 8 ft t = 0.5 in.	Vessel Weight Carbon steel, Refractory-lined, 6000 lbs. each, Three vessels.	69,000
Inline Burners	0.8×10^6 Btu/hr	Three Burners Cost as small heater with carbon steel tubes	30,000
	Claus Plant Subtotal		$445,000

Table B-III *(Continued)*

SCOT Process

EQUIPMENT ITEM	SIZE	BASIS FOR COST ESTIMATION	PURCHASED COST
Hydrogenation Reactor R-4	d = 8 ft L = 8 ft t = 0.5 in.	Vessel Weight 6,000 lbs. Carbon Steel	$18,000
Desuperheater/ Condenser T-5	d = 4.5 ft h = 70 ft t = 0.5 in	Vessel Weight 30,000 lbs. Carbon Steel	45,000
DIPA Stripper T-3	d = 3 ft h = 60 ft t = 0.5 in	Vessel Weight 18,000 lbs. Carbon Steel	30,000
H_2S Absorber T-4	d = 5 ft h = 60 ft t = 0.5 in	Vessel Weight 30,000 lbs. Carbon Steel	45,000
DIPA Stripper Reflux Drum V-4	d = 3.5 ft L = 8 ft t = 0.5 in	Vessel Weight 4,000 lbs. Carbon Steel	13,000
Sour Water Stripper T-6	d = 1 ft h = 10 ft t = 0.25 in	Column Height, Diameter Carbon Steel	6,000
DIPA Surge Tank V-5	d = 5 ft L = 10 ft	Vessel Volume 1500 Gallons	4,000
Contact-Condenser Cooler, E-1	2,700 ft^2 670 gpm c.w.	Heat Exchanger U-tube, Carbon Steel	27,000
DIPA Rich/Lean Exchanger, E-2	700 ft^2	Heat Exchanger Fixed-tube, Carbon Steel	12,000
DIPA Cooler E-3	1,000 ft^2 220 gpm c.w.	Heat Exchanger U-tube, Carbon Steel	13,000
DIPA Stripper Reboiler E-4	1,300 ft^2 75 psia steam 7,400 lbs/hr	Heat Exchanger U-tube, Carbon Steel	18,000
DIPA Stripper Condenser E-5	500 ft^2 140 gpm c.w.	Heat Exchanger U-Tube, Carbon Steel	9,000

Table B-III *(Continued)*

SCOT Process (Continued)

EQUIPMENT ITEM	SIZE	BASIS FOR COST ESTIMATION	PURCHASED COST
SCOT Steam Generator E-6	2,300 ft^2 75 psia steam 2,900 lbs/hr	Heat Exchanger Fixed-tube, Carbon Steel	31,000
Sour Water Reboiler E-7	100 ft^2 75 psia steam 500 lbs/hr	Heat Exchanger Fixed-tube, Carbon Steel	4,000
Tail Gas Steam Generator E-8	4,500 ft^2 2,900 lbs/hr 75 psia steam	Heat Exchanger Fixed-tube, Carbon Steel	40,000
Reducing Gas Generator, F-5	3.0×10^6 Btu/hr	Cost as furnace	28,000
Thermal Oxidizer F-6	6.0×10^6 Btu/hr	Cost as furnace	48,000
Weak Caustic Pump, P-1	310 gpm 50 psi	Chemical inline, with spare, 11 kW	4,000
Condensate Pump P-2	310 gpm 50 psi	Chemical inline, with spare, 11 kW	4,000
DIPA Pump P-3	124 gpm 50 psi	Chemical inline, with spare, 4.5 kW	4,000
Reflux Pump P-4	6 gpm 50 psi	Chemical inline, with spare, 0.5 kW	2,000
Rich DIPA Pump P-5	124 gpm 25 psi	Chemical inline, with spare, 2 kW	3,000
DIPA Forwarding Pump, P-6	124 gpm 25 psi	Chemical inline, with spare, 2 kW	3,000
Water Forwarding Pump, P-10	10 gpm 50 psi	Chemical inline, 0.5 kW	2,000
	SCOT Process Subtotal		**$417,000**

Cost Summary for Conventional SRP:

Total cost of major equipment (1979)	*	**$1,302,000**
Adjusted cost of major equipment	**	**$1,836,000**
Estimated Direct Fixed Capital	***	**$9,179,000**

* Based on cost data from Peters and Timmerhaus (1980), which are normalized to January, 1979, when the M & S EquipmentCost Index was 561.

** Adjusted on the basis of the M & S Equipment Cost Index of 791 for October, 1985 (*Chemical Engineering*, Jan. 20, 1986).

*** Assumes D.F.C. equal to five times total cost of items of major equipment.

This report was done with support from the Department of Energy. Any conclusions or opinions expressed in this report represent solely those of the author(s) and not necessarily those of The Regents of the University of California, the Lawrence Berkeley Laboratory or the Department of Energy.

Reference to a company or product name does not imply approval or recommendation of the product by the University of California or the U.S. Department of Energy to the exclusion of others that may be suitable.

LAWRENCE BERKELEY LABORATORY
TECHNICAL INFORMATION DEPARTMENT
UNIVERSITY OF CALIFORNIA
BERKELEY, CALIFORNIA 94720