LBL-21743 c.2
Preprint

Lawrence Berkeley Laboratory

UNIVERSITY OF CALIFORNIA

RECEIVED
LAWRENCE
BERKELEY LABORATORY

OCT 16 1986

LIBRARY AND
DOCUMENTS SECTION

Materials & Molecular Research Division

Submitted to The Review of Scientific Instruments

A NEW SYSTEM FOR LEED INTENSITY MEASUREMENTS USING A REAL-TIME DIGITAL VIDEO PROCESSOR

D.F. Ogletree, G.A. Somorjai, and J.E. Katz

August 1986

TWO-WEEK LOAN COPY

This is a Library Circulating Copy
which may be borrowed for two weeks.

LBL-21743 c.2

Prepared for the U.S. Department of Energy under Contract DE-AC03-76SF00098

DISCLAIMER

This document was prepared as an account of work sponsored by the United States Government. While this document is believed to contain correct information, neither the United States Government nor any agency thereof, nor the Regents of the University of California, nor any of their employees, makes any warranty, express or implied, or assumes any legal responsibility for the accuracy, completeness, or usefulness of any information, apparatus, product, or process disclosed, or represents that its use would not infringe privately owned rights. Reference herein to any specific commercial product, process, or service by its trade name, trademark, manufacturer, or otherwise, does not necessarily constitute or imply its endorsement, recommendation, or favoring by the United States Government or any agency thereof, or the Regents of the University of California. The views and opinions of authors expressed herein do not necessarily state or reflect those of the United States Government or any agency thereof or the Regents of the University of California.

A New System for LEED Intensity Measurements Using a Real-time Digital Video Processor

D. F. Ogletree and G. A. Somorjai

Materials and Molecular Research Division
Lawrence Berkeley Laboratory, and
Department of Chemistry,
University of California at Berkeley
Berkeley, California 94720

J. E. Katz

Department of Instrument Science and Engineering
Engineering Division
Lawrence Berkeley Laboratory
Berkeley, California 94720

ABSTRACT

A new system for low energy electron diffraction (LEED) intensity measurements has been developed, using a video camera and digital processing of the video signal. Complete two-dimensional LEED patterns are digitized in real time with high resolution using a commercial digital video processor. Intensity-voltage (I-V) data on all beams in complex LEED patterns are collected simultaneously. A microcomputer analysis program automatically tracks the diffraction beams as a function of energy, and calculates beam position, size and integrated intensity, including a local background correction. Using a video tape recorder for intermediate data storage a complete set of I-V curves can be collected in less than 100 seconds.

August 12, 1986

A New System for LEED Intensity Measurements Using a Real-time Digital Video Processor

D. F. Ogletree and G. A. Somorjai

Materials and Molecular Research Division
Lawrence Berkeley Laboratory, and
Department of Chemistry,
University of California at Berkeley
Berkeley, California 94720

J. E. Katz

Department of Instrument Science and Engineering
Engineering Division
Lawrence Berkeley Laboratory
Berkeley, California 94720

Introduction

Low-energy electron diffraction (LEED) intensity measurements and dynamical LEED structure calculations are an important tool for studying surface structure. Increasingly powerful theoretical methods are providing detailed structural information for a wide variety of ordered surfaces investigated by LEED, including clean and reconstructed metals and semiconductors, and surfaces with chemisorbed or physisorbed atoms and molecules.[1,2] At the same time, the experimental measurement of LEED beam intensities has progressed.

We report here on the development of a new system for fast and accurate measurements of LEED beam intensities. This system can also measure the angular profiles of diffraction beams for studies of surface ordering.

Different techniques have been developed for measuring LEED intensities. Early work used a Faraday cup detector.[3] This required accurate mechanical motion of the detector inside the vacuum system to track the diffraction beams with changing energy. Each intensity-voltage (I-V) profile had to be measured separately. Collecting the large data base required for accurate structure calculations took a long time.

Most LEED I-V curves are now measured using a standard LEED optics equipped with a retarding field energy analyzer and a phosphor screen. Spot photometers, film and video photography can measure the brightness of spots in the diffraction pattern on the phosphor screen. The spot photometer shares many of the same disadvantages as the Faraday cup. It is still necessary to track each diffraction beam mechanically and to collect I-V curves one at a time.[4] Photographic methods are superior to spot photometry for LEED I-V curve measurements in most applications. The whole diffraction pattern is recorded without mechanical spot tracking. Data is acquired at a faster

rate, producing a permanent record of the LEED experiment.

Film photography is an indirect method of making LEED intensity measurements. After exposure and processing the film is digitized. I-V curves are calculated from the digitized images of the LEED patterns.[5,6,7] Great care is required to get reliable results: film processing must be carefully controlled, and the digitized image must be corrected for the logarithmic response of film to light.

Video techniques are superior to film for I-V measurements. The vidicon tube in a video camera is a transducer that converts light directly into an analog electrical signal suitable for digital processing with a linear response to light intensity. Video cameras have good spatial resolution - the FWHM of the optical point spread function for a combined system of vidicon tube, camera lenses and phosphor screen has been determined to be 0.042°,[8] much less than the angular width of the beam from a typical LEED electron gun. When the retarding field pass energy is less than ~ 70% of beam voltage, the spatial resolution of a video system has been shown to be superior to that of a Faraday cup system.[8]

A video camera records an image in horizontal scans. In the RS-170 format used in the U.S. for black and white video, 30 video images are collected per second, each with 480 horizontal scans lasting 64 μsec. A 2:1 interlace is used, i.e. the odd numbered scans are collected in the first 1/60 of a second, and then the even numbered scans in the next 1/60 second.

Several video-camera systems for measuring LEED I-V curves and beam profiles were developed in the 70's.[8-12] These systems digitize one point along each horizontal scan line. A computer builds up a LEED beam profile perpendicular to the video scan direction. The operator selects a spot and computer programs track the diffraction beam as the incident electron energy is varied. Each run generates one I-V curve. The process has to be repeated for each beam. Later systems with more sophisticated software could digitize profiles through several points in each image.[12] Recording the LEED patterns on video tape for later analysis allows a high data collection rate.[10,12]

A system recently developed for reflection high-energy electron diffraction (RHEED) measurements uses a more advanced version of this approach.[13] An intensity profile may be digitized in any direction, either along or at an angle to the video scan lines. This is accomplished by using faster electronics and more sophisticated triggering.

A video camera with a full image digitizer was used for the first time for LEED and ultra-violet photoelectron spectroscopy (UPS) measurements in 1979.[14] This system had limited resolution and required a special computer interface, and the data acquisition rate was slow compared to standard video systems.

During the late 70's and early 80's image processing developed rapidly with the introduction of computer based systems that digitize and

operate on video images in real time with full video resolution.[15] We report here on the development of a LEED I-V data system based on a modern video processor.

Our system uses a video image digitizer to generate a two dimensional intensity map of the entire LEED pattern at high resolution in real time. The analysis software tracks all the beams in the pattern, and calculates the location, width, peak and integrated intensity for each diffraction spot. The instrumental background is automatically subtracted, and an algorithm corrects for the local diffuse electron scattering background. The major hardware components for this system are available commercially.

Data Acquisition

Most of our LEED I-V measurements are performed on surfaces with chemisorbed molecules. Since these systems are often sensitive to electron beam damage or chemical contamination, I-V data should be collected quickly. Data acquisition is faster than analysis for our LEED system - an integrated LEED image may be acquired in ~ one second, and the data analysis routines take ~ 0.5 second per LEED spot at each energy. A complex diffraction pattern may have more than 50 spots, so we record the diffraction patterns on video tape for later analysis to minimize the data collection time. This also provides a permanent record of the LEED experiment.

The data acquisition system is shown schematically in figure 1a. A camera with an *f/.85* lens and a high sensitivity vidicon tube images the entire phosphor screen of a conventional four-grid LEED optics. The camera is enclosed in a light-tight box attached to the view-port of the vacuum system. The video signal is recorded by a video cassette recorder (VCR) using standard VHS video cassettes, and is simultaneously displayed on a video monitor.

Data is acquired with the LEED electron gun power supply under computer control. The Varian[16] LEED power supply has been modified to allow for external control (figure 1b). The beam voltage amplifier input is at ~ twice the beam voltage, so a 2.5 kV optical isolation stage is used in the control circuit. A feedback control loop was added to compensate for non-linearity in the power supply. This also helped to increase the response time of the power supply. Using the external control circuit of figure 1b the Varian supply has a 10% to 90% rise time of 290 msec.

The RS-170 video output from the computer terminal is mixed with the video output from the camera, which is synchronized to the terminal video output. Information from the computer terminal is superimposed on the recorded video image and shows beam voltage and the periods when the electron gun supply voltage is changing. The video signal level is monitored to detect saturation of the camera amplifier, which occurs when the video signal level exceeds 1.0 volt. Below this level the vidicon transducer, digitizer, and camera electronics have a linear response.

The VCR runs continuously during the experiment. After each

change in beam voltage time is allowed for the LEED power supply to stabilize. A computer generated flag is superimposed on the video image while 1 to 256 video frames are recorded. The number of frames to be averaged should be a power of 2, and depends on the signal-to-noise ratio of the LEED image. Data acquisition typically takes ½ to 3 seconds per energy.

The recorded video image contains an instrumental background. A vidicon camera has a dark current output level that may be 10-20% of the maximum linear signal output level. In addition there may be stray light in the LEED image from the electron gun filament or from field emission at the phosphor screen. We record a zero beam-voltage instrumental background image before and after collecting the I-V curve data. This instrumental background image is subtracted from the recorded LEED images during data analysis. The remaining experimental background is from scattered electrons.

Information describing an experiment is recorded on the video tape cassette along with the LEED images, including surface preparation and angles of incidence. After the LEED images are collected an incident beam current calibration table, used to normalize the I-V curves, is added to the tape.

Video Processing

The digital video processor is the heart of our LEED system. Real time digital video processors are available from several manufacturers. We use a system developed by Imaging Technology, Inc.[17] There are three modules in this system: the analog processor, the frame buffer, and the arithmetic logic unit. Each program controllable module plugs directly into the backplane of our LSI-11/23 computer.[18]

The analog processor module converts a RS-170 video input signal to a stream of digital data (the analog processor is also compatible with other video standards, including European standards). Each of the 480 horizontal video scan lines that make up an image is broken into 512 pixels and each pixel is digitized with 8-bit resolution over the 0 to 1.0 volt video signal range. A frame buffer memory module stores this stream of digital data. Likewise, a stream of digital data from a memory can be displayed as an analog video output signal. Pixel values may be modified as they are transmitted to the video monitor to enhance the image contrast. The arithmetic logic unit module performs operations on data streams from frame buffer memories or the analog processor. These operations include addition, subtraction, multiplication, and logical comparisons. Video pixels are digitized, processed, and stored over a high-speed video bus at a rate of 10 MHz (figure 2). Data transfer is synchronized with the video scan.

During data analysis a video tape of the experimental LEED patterns is played into the video processor. This image is digitized with 8-bit accuracy, or 256 'gray levels'. Up to 256 consecutive images at a given incident electron energy may be summed together. When N frames are summed the signal-to-noise ration

in the final image will be increased by $\sqrt{N}$ over a single image. Typically we sum 16 frames, for a final image with 12 significant bits of data (two 8-bit frame buffer memories are coupled, so an image of up to 16 significant bits can be stored). A background image, consisting of the 8 most significant bits of the integrated image at zero beam voltage, stored in another frame buffer, is subtracted from the 8 most significant bits of the integrated diffraction pattern.

The output from the video processor is a two dimensional digital intensity map of the original diffraction pattern. The spatial resolution is 512x480 pixels. The image signal-to-noise ratio has been improved by integrating several video frames together, and the instrumental background has been subtracted. The processed image (figure 3) is displayed on a video monitor, with computer enhanced contrast to aid the visual interpretation of the diffraction pattern. The analysis program uses this digital intensity map to calculate the integrated intensities of the different diffracted beams in the LEED pattern.

The data acquisition rate can be greatly increased, at the cost of reduced spatial resolution and a decreased signal to noise ratio for experiments where time resolution is important.[19] The maximum data acquisition rate at full spatial resolution is 30 images per second (with no image averaging). The background noise increases, but this is only a serious problem for weak diffraction beams. Video data can be acquired as fast as 60 images per second if the video resolution is reduced to 512 x 240 pixels. At this rate LEED I-V profiles can be acquired in a few seconds, provided the LEED power supply can change beam voltage this rapidly. Most commercial LEED supplies are not this fast - the Varian supply we use has a rise time of 0.29 seconds, too slow to change beam voltage in 16 milliseconds.

Instrumental Limits

A system used for LEED I-V measurements should have a large dynamic range and a high sensitivity. The dynamic range is the ratio of the most intense feature that can be measured without distortion to the least intense feature that can be detected above the noise level. The spot intensities in a LEED experiment can range over three orders of magnitude or more, and an I-V curve for an individual beam can range over two orders of magnitude or more. The properties of the vidicon tube and the camera and digitizer electronics determine the sensitivity and dynamic range of the experiment. The main noise sources in the video data acquisition system are the video camera amplifier, with $\sim$ 2 millivolts peak-to-peak noise, and the video recorder, which adds $\sim$ 4 millivolts peak-to-peak of noise. The video digitizer resolution is 2.5 millivolts, so the video camera and video recorder noise does not degrade the signal significantly.

The practical dynamic range of our system for I-V curve measurement is somewhat over two orders of magnitude. This dynamic range is usually enough to record an I-V curve for a given beam. When there are large

differences in intensity between different diffraction beams, for example between substrate and superlattice diffraction beams, the same data can be recorded at two different camera lens openings (*f*-stops). In one run the strong I-V curves are measured, although the weak beams may be lost in the system noise. In the second run the camera lens opening is increased while the weaker I-V curves are measured, and the strong beams may saturate the video camera electronics at times. This two-pass method increases the effective dynamic range of the system.

Our initial work with the video digitizer system used a standard vidicon camera equipped with a cadmium/zinc telluride target [20] vidicon tube. This is a high sensitivity camera tube with a linear response to incident light (γ=1), and the camera does not vary the vidicon target voltage for automatic gain control. Our improved system uses a camera designed for scientific instrumentation applications,[21] with a higher signal-to-noise ratio and externally controlled amplifier gain and dark level. The vidicon tube is a one inch format silicon target tube[22] with higher sensitivity and resolution and a better spectral match to the P-11 phosphor used in our LEED optics. The silicon tube has a low dark current, and γ is equal to one over three orders of magnitude of illumination.

I-V Curve Generation

A set of computer programs has been developed to generate I-V curves from the digitized images of LEED patterns. Figure 4 shows the basic structure of the LEED analysis program. The input for the analysis program is a list of the reciprocal space coordinates for all the beams in the diffraction pattern, along with the coordinates for some spots in the first image. The known spot positions are used to fit the unit cell vectors, and the remaining spot positions are predicted using these calculated unit cell vectors. This approach to tracking diffraction spots based on the unit cell of the reciprocal space lattice is similar to one used to analyze digitized photographs of LEED patterns.[23]

At each energy the program searches for a LEED spot near its predicted position, finds the local maxima, and then evaluates spot widths, background, and integrated intensity.

After evaluating all the spots at a given energy, the unit cell is recalculated, and new spot positions are extrapolated for the next energy. When the program is run interactively, the process of spot search and evaluation is displayed on a graphics terminal, and the operator may override the decisions of the program. There are several adjustable parameters in the search and evaluation routines to optimize the performance of the analysis programs for LEED patterns from different types of surfaces.

The required complexity of the LEED analysis programs depends on the diffraction patterns being studied. For surfaces with small unit cells, such as unreconstructed, low Miller index crystal planes, the LEED pattern has only a few, well separated

spots, and simple spot tracking and evaluation routines are adequate. Surfaces with large unit cells, such as some reconstructed surfaces, stepped surfaces, and many chemisorption systems, require a more sophisticated analysis. Here the LEED patterns are dense, and the total diffracted intensity is divided among more diffraction beams. The search routines must not confuse adjacent spots, and the background calculations should not be influenced by neighboring spots.

Much of our LEED work involves molecular chemisorption systems with large unit cells. One example is the $(2\sqrt{3}x4)$-rectangular unit cell of the benzene/carbon monoxide co-adsorption system on Pt(111)[24] (figure 5). When the three rotated domains of the overlayer are superimposed in the LEED pattern, the spots fall on an 8x8 lattice. This system was successfully analyzed.

A flowchart for the location and evaluation of LEED spots is shown in figure 6. A 50x50 pixel region around the predicted spot position is read from the video frame buffer memory into the main computer memory, and then a 2-dimensional smoothing routine is applied to this region. Each pixel value is replaced by a weighted average of the original pixel and its eight nearest neighbors, with the original pixel given the same weight as the sum of the neighboring pixels. This significantly smooths the background noise without broadening the spots, since the FWHM of typical LEED spot is 6-15 pixels. This '9-point smoothing' routine is normally applied twice.

After smoothing there is a search for a local maximum near the predicted spot position. The range of this search is limited to a fraction of the size of the substrate reciprocal unit cell, which depends on the density of the LEED pattern. The program is able to distinguish between a true spot (local maximum) in the search area, and a tail or shoulder of an adjacent spot in the LEED pattern which may have greater total intensity. If a true local maximum is not found, the spot evaluation fails.

A local background is calculated around the local maximum. This background is from incoherently and quasi-elastically scattered electrons (the instrumental background has already been subtracted by the video processor). The quasi-elastic electron background is a combination of phonon (Debye-Waller) scattering and incoherent scattering to to imperfect order in the surface (point defects, impurities, domain boundaries, etc.). Careful correction of the electron scattering background can significantly increase the effective dynamic range of the I-V measurement, especially for imperfectly ordered systems, or when measurements cannot be made at low temperatures. A local correction is necessary, since this background varies with angle and incident electron energy. The angular variation is slow compared to the width of a LEED spot, so local background correction is possible.

The background is calculated on an ellipse around the local maximum. An ellipse is used since our video pixels are rectangular. The size of this

ellipse is twice the spot size, a parameter in the analysis program which is chosen to fit the system under study. A histogram is made of the pixel intensities along this ellipse, and the background is taken to be the average of the intensity-interval with the largest number of pixels. The interval width is chosen to give reasonable statistics. A typical intensity interval width is 1/2048 of the maximum intensity (maximum linear output signal of the video camera). This local-background algorithm was found to be much less sensitive to perturbations by adjacent spots than our previous algorithms based on averaging, since an adjacent spot influences only a fraction of the perimeter of the local spot. The performance of this background algorithm has been observed interactively in different LEED experiments. It gives stable and reasonable values for background intensity, with better performance than an averaging approach.

If the spot peak intensity is less than the noise level after the local background is subtracted, the spot is rejected and the spot evaluation fails. The noise level is a parameter in the analysis program. Its value depends on the number of frames averaged and the amount of smoothing used. With 16 frames averaged and then smoothed twice, the noise level is typically set at 7/4096, or 0.17% of full scale. With no averaging or smoothing the noise level is typically set at 1.5% of full scale.

The width of the spot is measured along the direction of the video camera scan and also across the video scan lines. A spot is rejected if it is narrower than the LEED instrumental width. This test rejects artifacts, such as flares on the phosphor screen.

The integrated intensity is calculated by summing the pixel intensities, less background and noise, within an elliptical spot area. Only positive values are included in the sum. The semi-axes of the integration ellipse are analysis program parameters. A spot is rejected if any pixel in the integration area has an intensity greater than the peak intensity. This can happen if a weak spot is adjacent to a strong spot in a dense lattice. The local background algorithm cannot compensate for a background that changes significantly on the scale of the spot width. Only the more intense spots are used in the calculation of the unit cell vectors, which are used to predict spot positions at the next energy. Weak spots are included in the I-V curves, but not in the unit cell calculation.

When the analysis program is run interactively, profiles through the LEED spot along the video scan and perpendicular to the video scan are displayed on the graphics terminal (figure 7). The local background, spot widths, and integrated intensity are shown, and the operator can monitor or override the decisions made by the program.

Performance

The video LEED data system and analysis programs have been operating reliably since 1983. I-V curves were measured for the clean Pt(111) surface as a test of the equipment. There was excellent agreement with previously published I-V curves

for this surface[4,25] . The first new system to be studied with the video LEED apparatus was the surface structure of the $(\sqrt{3}x\sqrt{3})R30°$ phase on the (111) face of a α-copper-16 at. % aluminum alloy crystal.[26] This work was the first structure determination for an ordered alloy surface where there was no long range order in the bulk alloy. The agreement among I-V curves for symmetry related diffraction beams, and the reproducibility of I-V measurements for the Cu-Al alloy system are shown in figure 8.

The video LEED system has been used to study other systems, including the structure of carbon monoxide on Pt(111) in the c(4x2) pattern,[27] the structure of incommensurate graphitic overlayers of carbon on Pt(111),[28] the structure of benzene and carbon monoxide co-adsorbed on Rh(111) in the $c(2\sqrt{3}x4)$ rect pattern,[29] and in the (3x3) pattern.[29]

I-V curves were successfully calculated for the $(2\sqrt{3}x4)$ rectangular LEED pattern of benzene and carbon monoxide co-adsorbed on the (111) surface of platinum,[30] the most complex diffraction pattern analyzed to date with our video LEED system. I-V curves for 70 different beams were recorded between 20 and 150 eV. The video LEED system was able to resolve I-V curves for beams separated in reciprocal space by only 12% of the substrate unit cell size.

Acknowledgements

Prof. Peter Stair and Dr. Jack Frost developed a unit cell spot tracking approach to I-V curve generation for the analysis of photographs of LEED patterns. This concept was used in the interactive analysis software described in this paper. Dahlia Remler helped with software development as a summer research student at LBL.

Discussions with Prof. Stan Williams and Jory Yarmoff of the U.C.L.A. Chemistry Department were of great help in selecting the video hardware and processors. They have developed a low energy ion scattering detector based on a real-time digital video processor.

This work was supported by the Director, Office of Energy Research, Office of Basic Energy Sciences, Materials Sciences Division of the U.S. Department of Energy under Contract W-74000SF-ENG-48.

References

1 MA Van Hove, SW Wang, DF Ogletree, and GA Somorjai, J. Quantum Chem., to be published.

2 MA Van Hove and SY Tong, *Surface Crystallography by LEED* Springer (1979) Berlin, New York

3 Mark K Debe, Rev. Sci. Instrum. **47** 39 (76). MK Debe, David A King, and FS Marsh, Surf. Sci. **68** 437 (76).

4 E Zanazzi, F Jona, DW Jepsen, and PM Marcus, J. Phys. **C 10** 375 (77).

5 PC Stair, TJ Kaminska, LL Kesmodel, and GA Somorjai, Phys. Rev. **B11,** 623 (75).

6 DC Frost, KAR Mitchell, FR Shepherd, and PR Watson, J. Vac. Sci. Tech., **13,** 1196 (1976).

7 TN Tommet, GB Olsyewski, PA Chadwick, and SL Bernasek, Rev. Sci. Instrum. **50,** 147 (79).

8 DG Welkie and MG Lagally, Applications of Surface Science **3,** 272 (1979).

9 P Heilmann, E Lang, K Heinz, and K Müller, Applied Physics **9,** 247 (1976).

10 E Lang, P Heilmann, G Hanke, K Heinz, and K Müller, Applied Physics **19,** 287 (1979).

11 H Leonhard, A Gutmann, and K Hayek, J. Phys. E: Sci. Instr. **13,** 298 (80).

12 P Heilmann, E Lang, K Heinz, and K Müller, in *Determination of Surface Structure by LEED,* PM Marcus and F Jona, eds., Plenum 1984 (New York).

13 B. Bölger and P. K. Larsen. Rev. Sci. Inst. **57** 1363 (86).

14 SP Weeks, JE Rowe, SB Christman, and EE Chaban, Rev. Sci. Instrum. **50,** 1249 (1979).

15 Digital Design, October 1982, p. 78; Electronic Design, May 27, 1982, p. 215.

16 Varian 981-2145, Varian Corp., Palo Alto, CA.

17 IP-512 system; Imaging Technology Inc., 400 West Cummings Park, Suite 4350, Wobern, MA 01801.

18 LSI-11/23 Q-bus®, Digital Equipment Corporation, Maynard, MA.

19 K Müller, E Lang, L Hammer, W Grimm, P Heilmann, and K Heinz, in *Determination of Surface Structure by LEED,* PM Marcus and F Jona, eds., Plenum 1984 (New York).

20 Panasonic Newvicon® type S4076.

21 68 Series® instrumentation camera, Dage-MTI Inc., 208 Wabash Street, Michigan City, Indiana 46360.

22 RCA Ultricon II® type 4532/U.

23 MA Van Hove, RJ Koestner, JC Frost, and GA Somorjai, Surf. Sc. **129,** 482 (83).

24 DF Ogletree, MA Van Hove, and GA Somorjai, to be published.

25 DL Adams, HB Nielsen, and MA Van Hove, Phys. Rev. **B20,** 4789 (79).

26 RJ Baird, DF Ogletree, MA Van Hove, and GA Somorjai, Surf.

Sci. **165,** 345 (86).

27 DF Ogletree, MA Van Hove, and GA Somorjai, Surf. Sci., in press.

28 ZP Hu, DF Ogletree, MA Van Hove, and GA Somorjai, to be published.

29 RF Lin, MA Van Hove, and GA Somorjai, J. Amer. Chem. Soc., in press.

30 MA Van Hove, RF Lin, GS Blackman, and GA Somorjai, to be published.

Figure Captions

1 a) Video LEED Data Acquisition System block diagram, showing video signal and synchronization connections. b) Isolated LEED power supply control circuit.

2 Digital Video Processor block diagram, showing video signals, video data flow, computer data flow, and computer control lines.

3 LEED images of the c(4x2) structure of carbon monoxide, chemisorbed on the (111) surface of platinum, recorded on video tape and displayed on the video monitor. a) A single video frame. b) The same image with contrast enhanced by the video processor. Both the LEED spots and the noise are more prominent. c) The same image with 16 frames integrated together and the instrumental background subtracted. Note the reduced noise. d) The same surface structure at a different energy. One LEED spot has been selected by the analysis program.

4 Flow chart of data analysis program

5 Photos of LEED patterns for chemisorbed molecules with large unit cells.

6 Detailed flow chart of the LEED spot evaluation routines

7 After the analysis program locates and analyzes a LEED spot the results can be displayed interactively, as shown here in photographs of the computer terminal display. The upper plots show cross sections through the LEED spot along (right) and perpendicular (left) to the video scan direction. The lower plots show the "derivatives" (changes in intensity between adjacent pixels) of these cross sections. The solid horizontal line is the calculated local background for the spot, and the solid vertical lines show the calculated spot width. The spot integrated intensity is the volume of the spot included between the dashed vertical lines, the preset integration area, and above the dashed horizontal line, the (calculated) background plus a preset noise level. The spots in this figure were not smoothed.

8 I-V curves produced by the video LEED system. This data is from the $(\sqrt{3}x\sqrt{3})R30^\circ$ structure on the (111) surface of an α-Cu-Al alloy single crystal,[26] recorded at normal incidence at 150 K. The data have been normalized for incident beam current, but are otherwise unprocessed. The upper part of the figure shows I-V curves for three symmetry-related substrate beams, and one of the same beams from a second experiment. The lower part of the figure shows three symmetry-related superlattice beams.

LEED DATA ACQUISITION SYSTEM

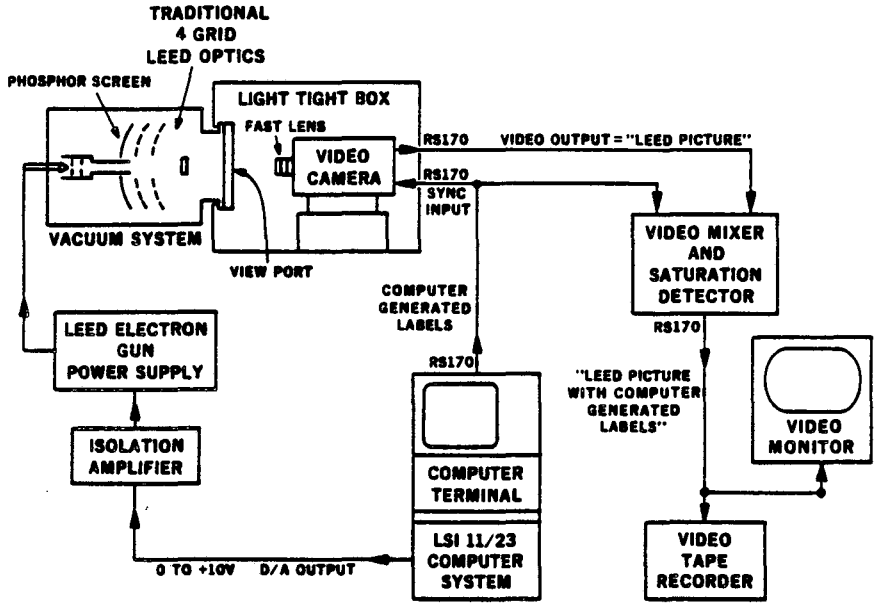

Video Data Acquisition

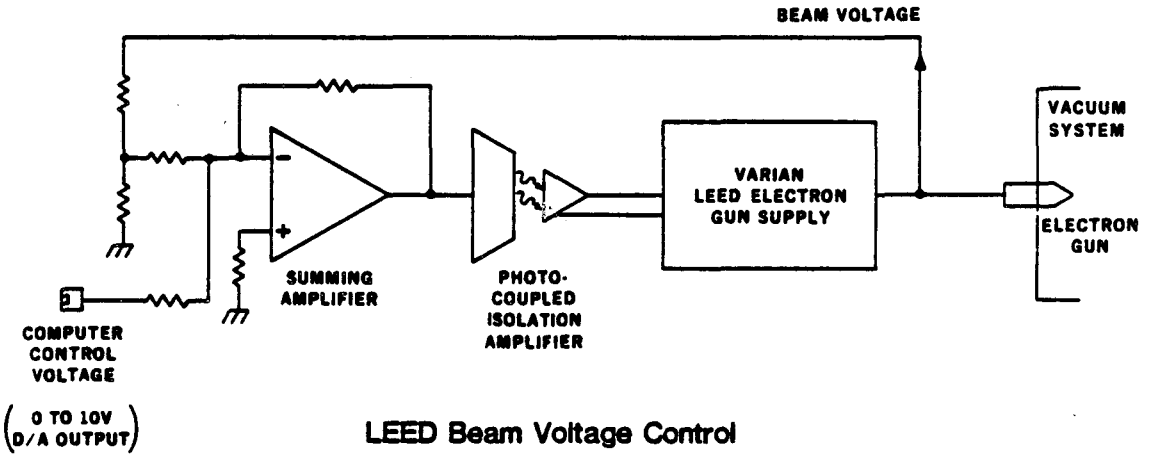

LEED Beam Voltage Control

Figure 1

XBL 865-1733

Digital Video Processor Block Diagram

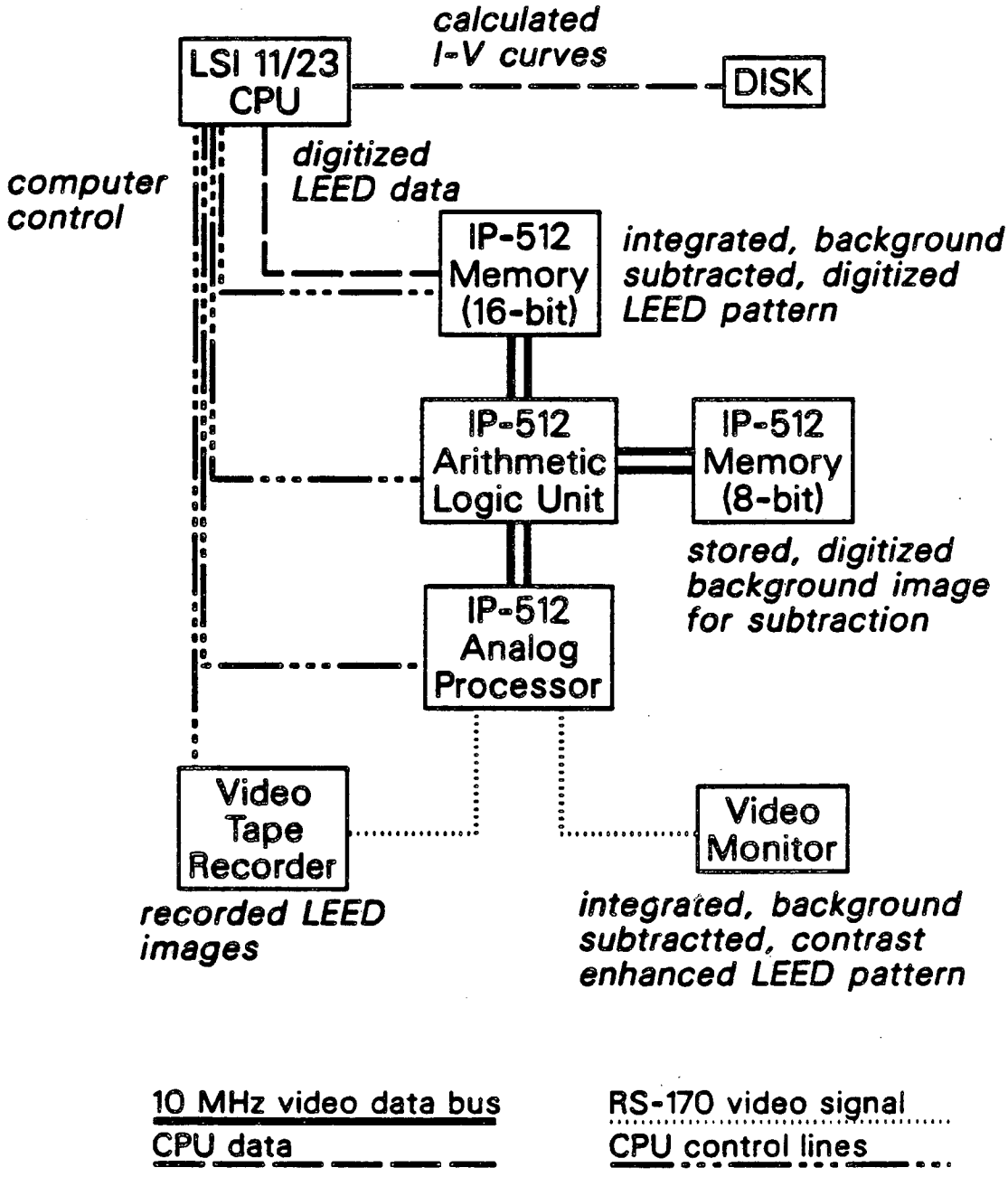

XBL 865-1735

Figure 2

LEED Patterns Displayed on Video Monitor

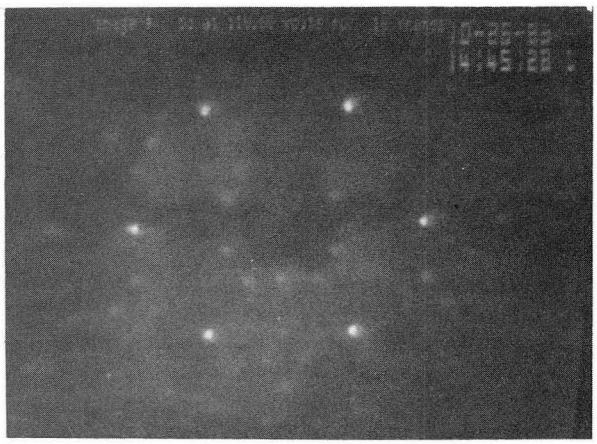

a) raw image from video tape recorder

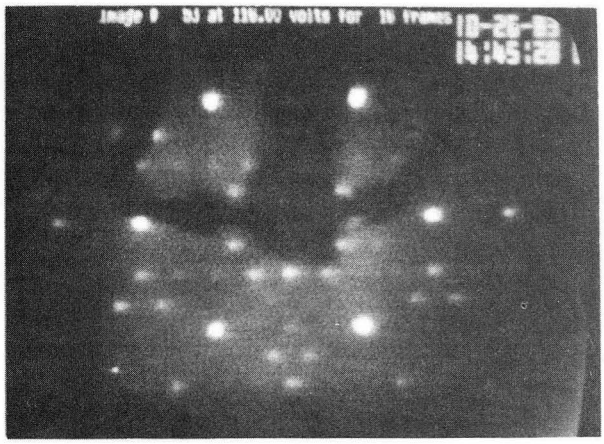

b) contrast enhanced image

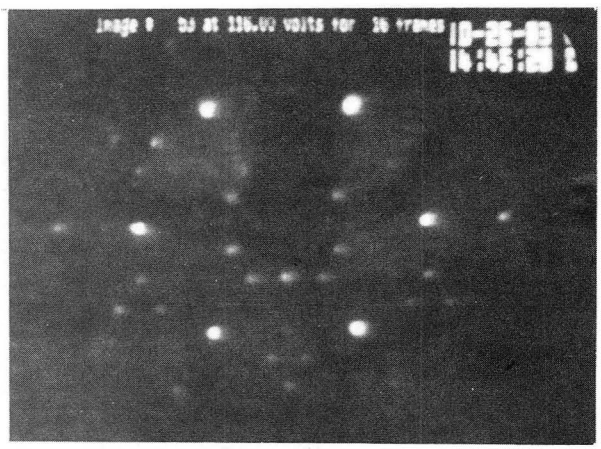

c) integrated and background subtracted image

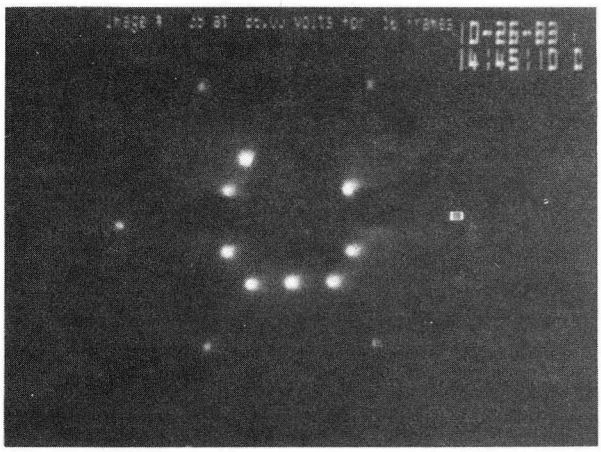

d) LEED spot selected for analysis

Figure 3

XBB 865-3580

LEED I-V Analysis Flowchart

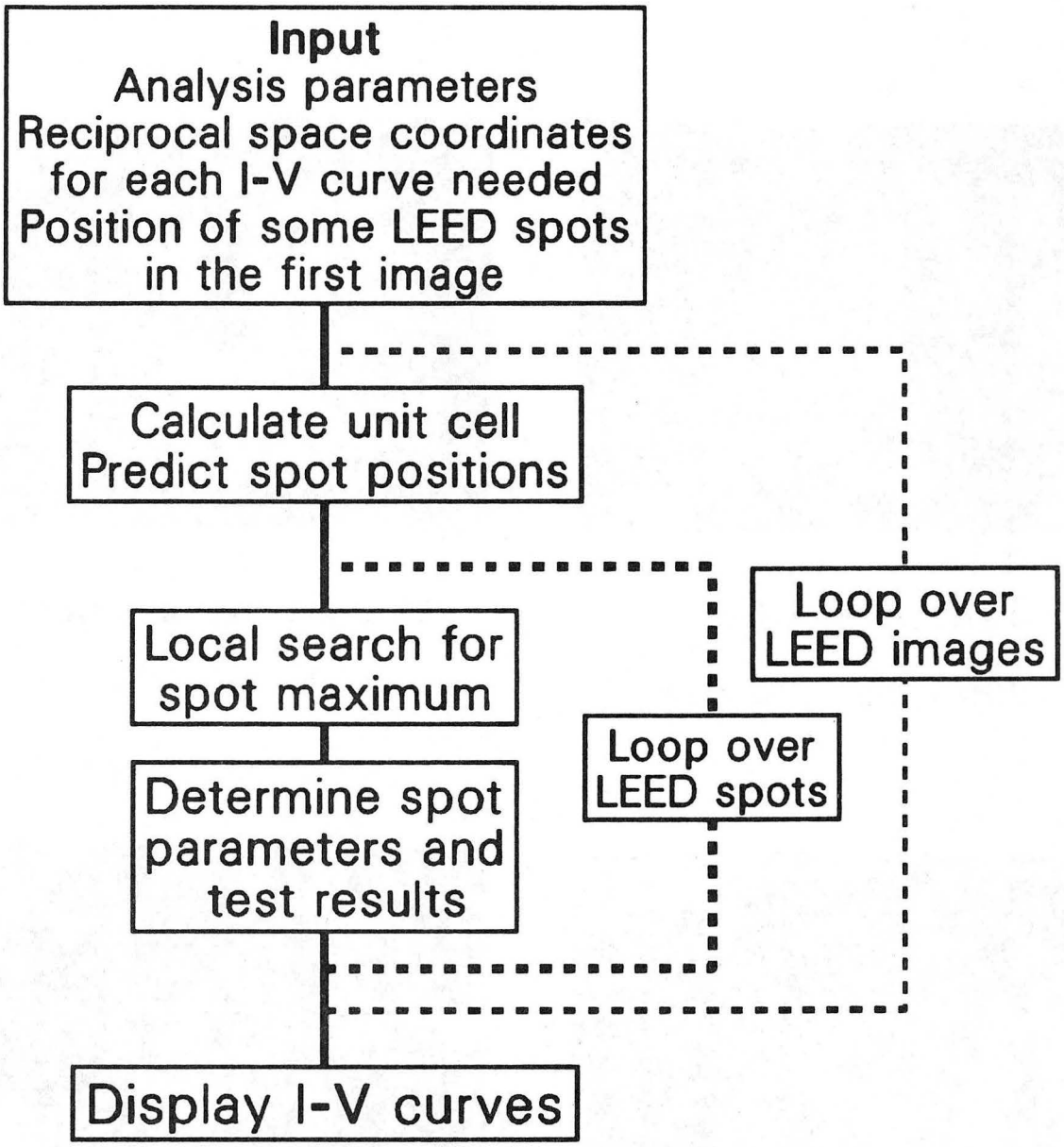

XBL 865-1736

Figure 4

LEED Patterns of Chemisorbed Molecules

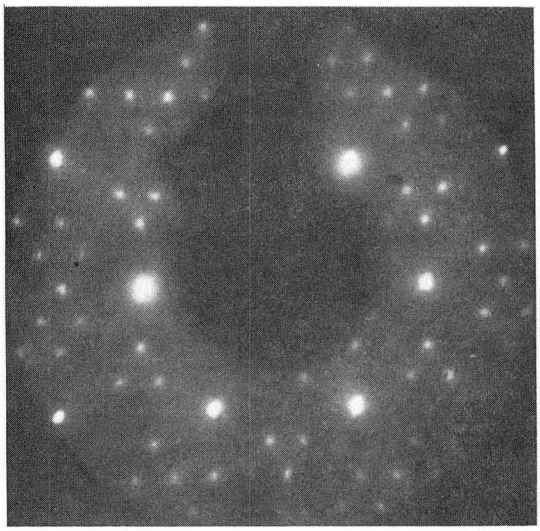

a) Pt(111)-c(4x2)-Carbon monoxide

130 eV at normal incidence

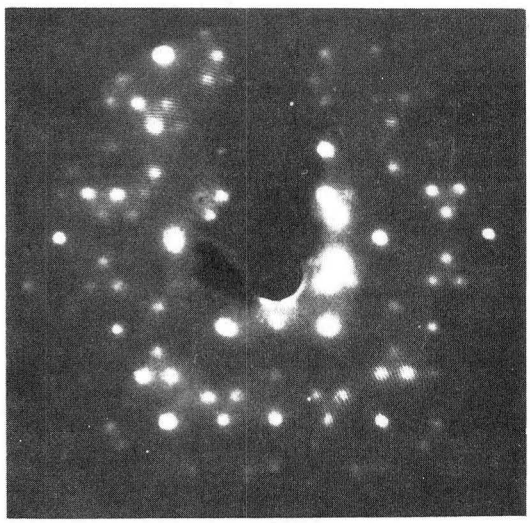

b) Pt(111)-(2$\sqrt{3}$x4)rect-Benzene

54 eV at near-normal incidence

Figure 5

XBB 864-3004-A

LEED Spot Analysis Flowchart

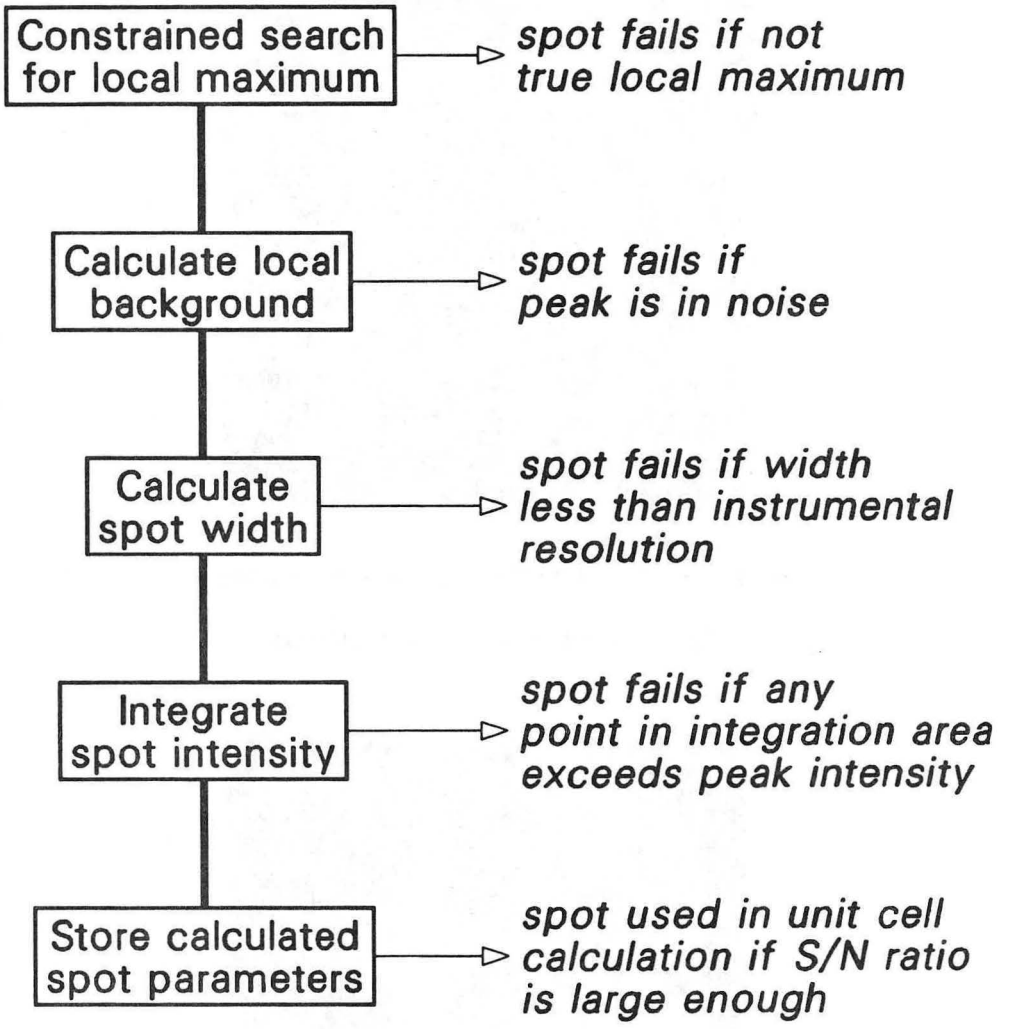

XBL 865-1819

Figure 6

LEED Spot Analysis

Interactive Display

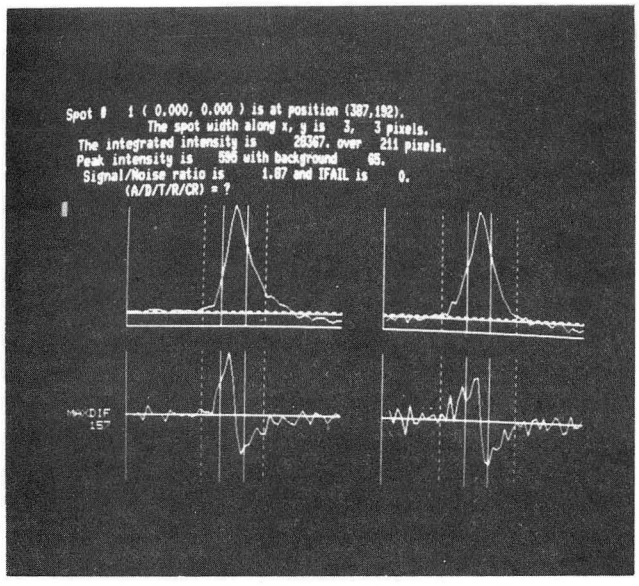

a) strong spot

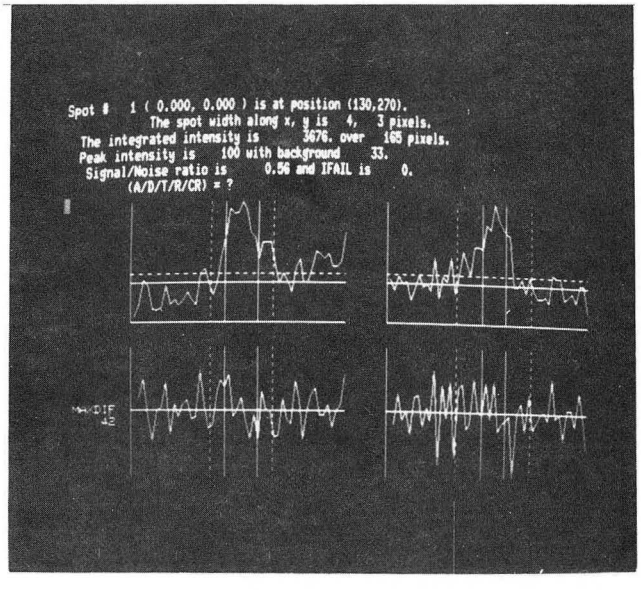

b) weak spot

XBB 865-3579

Figure 7

α-CuAl (111) I-V Curves

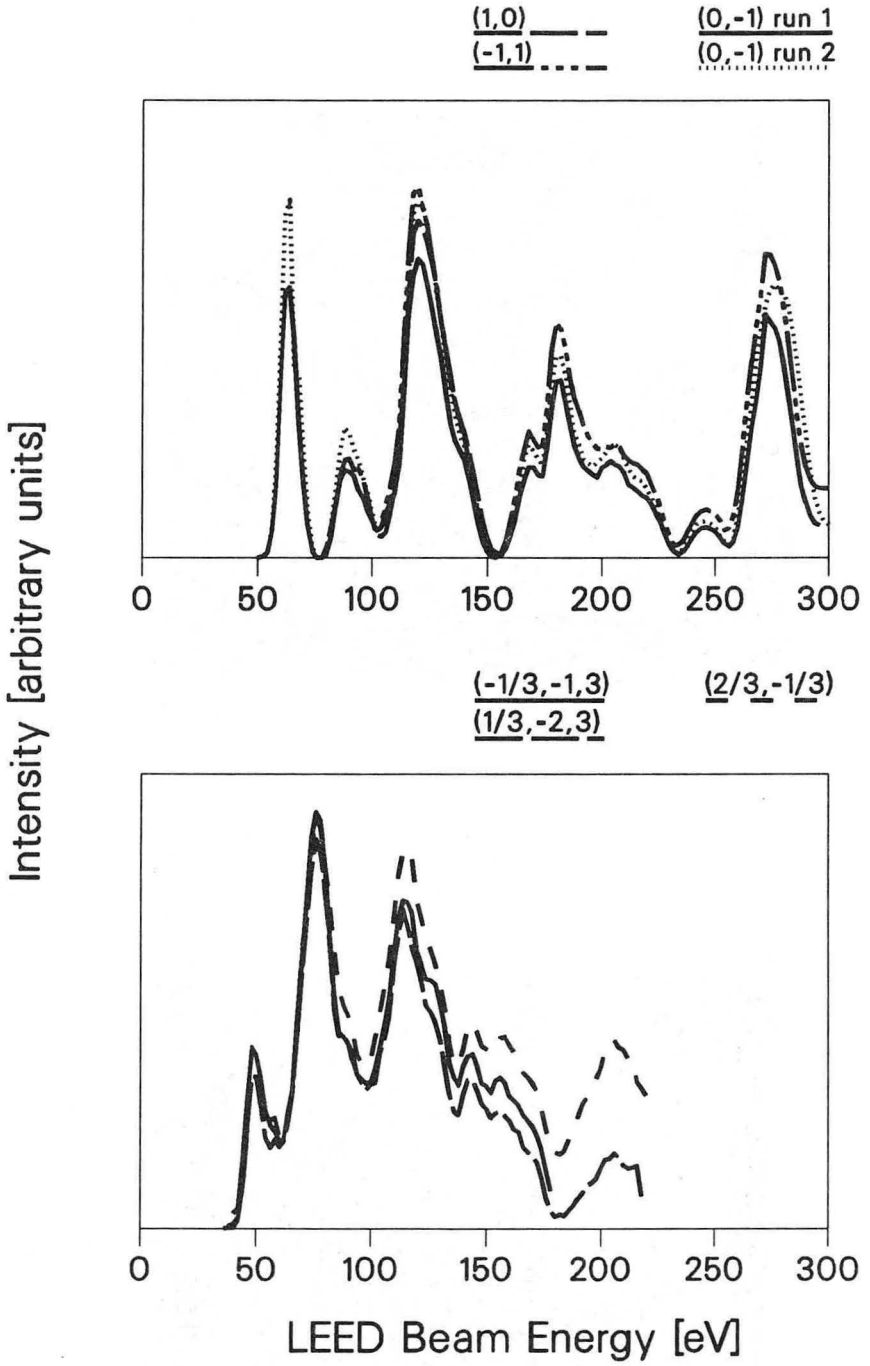

XBL 865-1734

Figure 8

This report was done with support from the Department of Energy. Any conclusions or opinions expressed in this report represent solely those of the author(s) and not necessarily those of The Regents of the University of California, the Lawrence Berkeley Laboratory or the Department of Energy.

Reference to a company or product name does not imply approval or recommendation of the product by the University of California or the U.S. Department of Energy to the exclusion of others that may be suitable.

LAWRENCE BERKELEY LABORATORY
TECHNICAL INFORMATION DEPARTMENT
UNIVERSITY OF CALIFORNIA
BERKELEY, CALIFORNIA 94720