Submitted to Journal of Applied Physics

LBL-2211
Preprint

THE POINT-OBSTACLE REPRESENTATION OF THE DISLOCATION-OBSTACLE INTERACTION

J. W. Morris, Jr. and C. K. Syn

September 1973

Prepared for the U. S. Atomic Energy Commission
under Contract W-7405-ENG-48

For Reference

Not to be taken from this room

LAWRENCE BERKELEY LABORATORY
UNIVERSITY OF CALIFORNIA
BERKELEY

LBL-2211

DISCLAIMER

This document was prepared as an account of work sponsored by the United States Government. While this document is believed to contain correct information, neither the United States Government nor any agency thereof, nor the Regents of the University of California, nor any of their employees, makes any warranty, express or implied, or assumes any legal responsibility for the accuracy, completeness, or usefulness of any information, apparatus, product, or process disclosed, or represents that its use would not infringe privately owned rights. Reference herein to any specific commercial product, process, or service by its trade name, trademark, manufacturer, or otherwise, does not necessarily constitute or imply its endorsement, recommendation, or favoring by the United States Government or any agency thereof, or the Regents of the University of California. The views and opinions of authors expressed herein do not necessarily state or reflect those of the United States Government or any agency thereof or the Regents of the University of California.

THE POINT-OBSTACLE REPRESENTATION OF THE DISLOCATION-OBSTACLE INTERACTION

by

J. W. Morris, Jr. and C. K. Syn
Department of Materials Science and Engineering
University of California

and

Inorganic Materials Research Division
Lawrence Berkeley Laboratory
Berkeley, California 94720

ABSTRACT

A general method is given for constructing the "point-obstacle" representation of the interaction between a dislocation and a physical obstacle. The equations of equilibrium are derived. The elastic interaction of a simple dislocation with a row of equispaced solute atoms which behave as repulsive barriers is treated as an illustration.

A dislocation in glide through a real crystal will generally encounter microstructural features such as forest dislocations, impurity atoms, or small precipitates which act as localized barriers to its motion. The theoretical analysis of the effect of these localized barriers on dislocation motion is considerably simplified if the barriers are regarded as point obstacles which exert point forces on the dislocation line. This "point obstacle" approximation has been widely used (e.g., ref. 1-4) in theoretical research on problems in which the dislocation-obstacle interaction plays a role.

Despite the frequent use of the point obstacle approach, to our knowledge the approximation itself has not been studied in detail. We have, therefore, begun research to define the limits of the approximation and to determine dislocation-obstacle interaction curves for physically relevant cases. In this communication we present a formal basis for the point obstacle approximation to the interaction between a dislocation and a circularly symmetric barrier. The results are illustrated with a simple example.

Consider a physical obstacle whose interaction with a gliding dislocation is circularly symmetric in the glide plane and has an effective range (d') which is small compared to the average separation of obstacles (l_s). Assume the dislocation is acted on by a resolved shear stress τ and consider that portion of the dislocation which is pressed against a particular obstacle. The local equilibrium configuration of the dislocation line will appear roughly as shown in figure 1. The total energy of this configuration may be written

$$E = \int_L \Gamma dl + \tau b A_L + W \tag{1}$$

where Γ is the line energy of the dislocation and the integral is taken over the portion (L) of the dislocation line included in the figure; A_L is the area behind L and $\tau b A_L$ measures the potential energy of L under applied stress τ; and W is the total energy of the interaction of L with the obstacle.

Using a two dimensional form of Gibbs[5] construction (illustrated in figure 1) the obstacle may be formally reduced to a point and the energy W localized. Given that d' is small we enclosed the obstacle in an imaginary circle (D) of small radius d appreciably greater than d'. Only the portion of L within D is perturbed by the obstacle. We then extrapolate the arms of L into D until they meet at a point (x). Let the extrapolated lines represent the dislocation within D and let the point of intersection represent the obstacle. The total energy of this hypothetical configuration (L') is

$$E' = \int_{L'} \Gamma dl' + \tau b A_{L'} + W', \tag{2}$$

which is identical to E if

$$W' = W + \int_D \left\{ \Gamma (dl - dl') + \tau b \, (dA_L - dA_{L'}) \right\} \tag{3}$$

If the dislocation is in mechanical equilibrium, there must be no possible variation of L (or, equivalently, of L') which causes the energy to decrease. As may be easily seen by considering variations which

leave the position of the point (x) in L' unchanged, it is necessary for equilibrium that W' have its minimum value, W'(x), consistent with the position (x) and the configuration of L outside of D, and L' be symmetric about a line (1) through x and the physical center of the obstacle. If L' satisfies these conditions and if it is in equilibrium with respect to all variations which carry x along 1 and constrain W' to W'(x), then it is in equilibrium with respect to any variation whatever. Hence from equation (2), L' is in mechanical equilibrium only if

$$\delta E' = \int_{L} (\Gamma/R - \tau b)\delta x_n \, dl' + \left(dW'/dx_1 - 2\Gamma\cos\psi/2\right)\delta x_1 \geq 0 \qquad (4)$$

In this equation R is the radius or curvature of the element dl' of L and δx_n is the normal displacement of this element. The angle ψ is the angle formed by L' at the intersection point x and the term involving ψ accounts for the net change in line length L' due to the displacement δx_1 of x along 1.

Since the variations δx_n and δx_1 are independent and may have either sign, the inequality (4) yields two necessary conditions for equilibrium:

$$(1)\ \tau b = \Gamma/R \qquad (5)$$

everywhere on L' and

$$(2)\ F = dW'/dx_1 = 2\Gamma\cos\psi/2 \qquad (6)$$

at the intersection point x. These conditions are the central equations of the point obstacle approximation[1].

Equation (6) may be used to generate a mechanical force-displacement relation for the dislocation-obstacle interaction in the point obstacle representation. Thus function $[F(x_1)]$ is obtained by displacing or

or deforming the unperturbed segments of the dislocation (for example, by increasing the applied stress) so that the dislocation passes through the obstacle while maintaining an equilibrium configuration. The resulting function $[F(x_1)]$ will be insensitive to the precise configuration of obstacles when $R \gg d$, and will be insensitive to the obstacles separation, l_s, when $l_s > d$. When these two conditions are satisfied the force-displacement relationship is a fixed property of the representative point obstacle. In the limit $l_s \gg d$ the finite displacement of the dislocation in sweeping through the obstacle may be ignored. The obstacle may then be treated as a mathematical point which influences the dislocation only when in physical contact with it. We have used this latter approach in theoretical studies of dislocation glide through fields of randomly dispersed obstacles[1].

To illustrate the point obstacle representation we present the following simple example (computational details are given in reference (6)). Consider a dislocation which is assumed to have a constant line tension, $\Gamma = \frac{3}{4} Gb^2$, where G is the elastic shear modulus. Let the dislocation encounter a line of equispaced solute atoms which behave as repulsive barriers. Let the solute atoms have a size mismatch (ε) with the matrix atoms. Let the dislocation-solute atom interaction be given by the linear elastic size effect[7], incorporating the Dorn-Stefansky[8] adaptation of the Cottrell[9] core modification to remove the singularity in the linear elastic solution. Given these assumptions the equilibrium configurations of the dislocation may be found numerically as a function of the resolved shear stress (τ).

A sequence of computed[10] equilibrium dislocation configurations is illustrated in figure 2, where we have set $\varepsilon = 0.06$ and $l_s = 10b$. The scale of the figure has been distorted to allow clear distinction between the different configurations. The three lower dislocation lines are stable equilibrium configurations assumed with increasing applied stress; the two upper dislocation lines are unstable equilibrium configurations for a dislocation which has passed the peak of the repulsive force. We have also shown the point obstacle representation of each configuration, constructed according to the method outlined above. The discrepancy between the true and reference dislocation configurations is significant only in the immediate vicinity of the obstacle ($\sim$1b). Moreover, the extrapolated dislocation segments are nearly straight lines.

The point obstacle force-displacement relation computed by applying equation (6) to this case is illustrated in figure 3. Further computations indicate that, as anticipated, this relation is reasonably insensitive to the spacing or configuration of obstacles for $l_s \gtrsim 4b$.

In previous work (e.g., ref. 4) the force-displacement relation for rigid motion of a straight dislocation through the solute atoms was used as an approximation to the dislocation-point obstacle interaction. The force-displacement relation for rigid motion was computed under the assumptions of this example and is compared to the dislocation-point obstacle interaction in figure 3. The agreement between the two curves is good. Use of the complete point-obstacle representation results in a slight increase in the maximum repulsive force and a small shift in the position of the maximum with respect to the physical center of the solute atom.

ACKNOWLEDGEMENTS

This work was supported by the U. S. Atomic Energy Commission through the Inorganic Materials Research Division of the Lawrence Berkeley Laboratory.

REFERENCES

1. J. W. Morris, Jr. and D. H. Klahn, J. Appl. Phys. (to be published).
2. J. E. Dorn in Dislocation Dynamics, Rosenfield, Hahn, Bement, and Jaffee, Eds., McGraw-Hill, New York (1968), p.27.
3. U. F. Kocks, Phil. Mag., 13, 541 (1966); Can. J. Phys., 45, 737 (1967); Trans. Japan Inst. Metals, 9 (suppl) 1 (1968).
4. L. J. Teutonico, A. V. Granato, and K. Lücke, J. Appl. Phys., 35, 220 (1964); A. V. Granato, K. Lücke, J. Schlipf, and L. J. Teutonico, J. Appl. Phys., 35, 2732 (1964).
5. J. W. Gibbs, Scientific Papers, Vol. I, Dover, N. Y. (1969), p. 219.
6. C. K. Syn, Ph.D. Thesis, Dept. of Materials Science and Engineering, University of California, Berkeley, 1973.
7. J. Weertman and J. C. Weertman, Elementary Dislocation Theory, MacMillan, New York (1964), p. 173.
8. T. Stefansky and J. E. Dorn, Trans. AIME, 25, 1869 (1969).
9. A. H. Cottrell, in Relation of Properties to Microstructure, ASM, Cleveland, 1954, p. 131.
10. To simplify the computations, a small effect due to the dislocation self-interaction was neglected[6].

FIGURE CAPTIONS

1. An illustration of the geometric construction used to define the point properties of an obstacle having a circularly symmetric interaction with a dislocation.

2. Sequence of equilibrium configurations of a dislocation (in solid lines) and their "point obstacle" representations (in dotted lines). The physical center of the repulsive solute atom is placed at the origin of the cartesian coordinates.

3. The force-displacement relation for the interaction between a dislocation and a repulsive elastic barrier of size mismatch $\varepsilon = 0.06$. F is the force exerted by the dislocation on the obstacle at equilibrium as a function of distance from the physical center of the obstacle. The solid curve is computed from the point obstacle approximation using equation (6). The dotted comparison curve assumes a rigid dislocation.

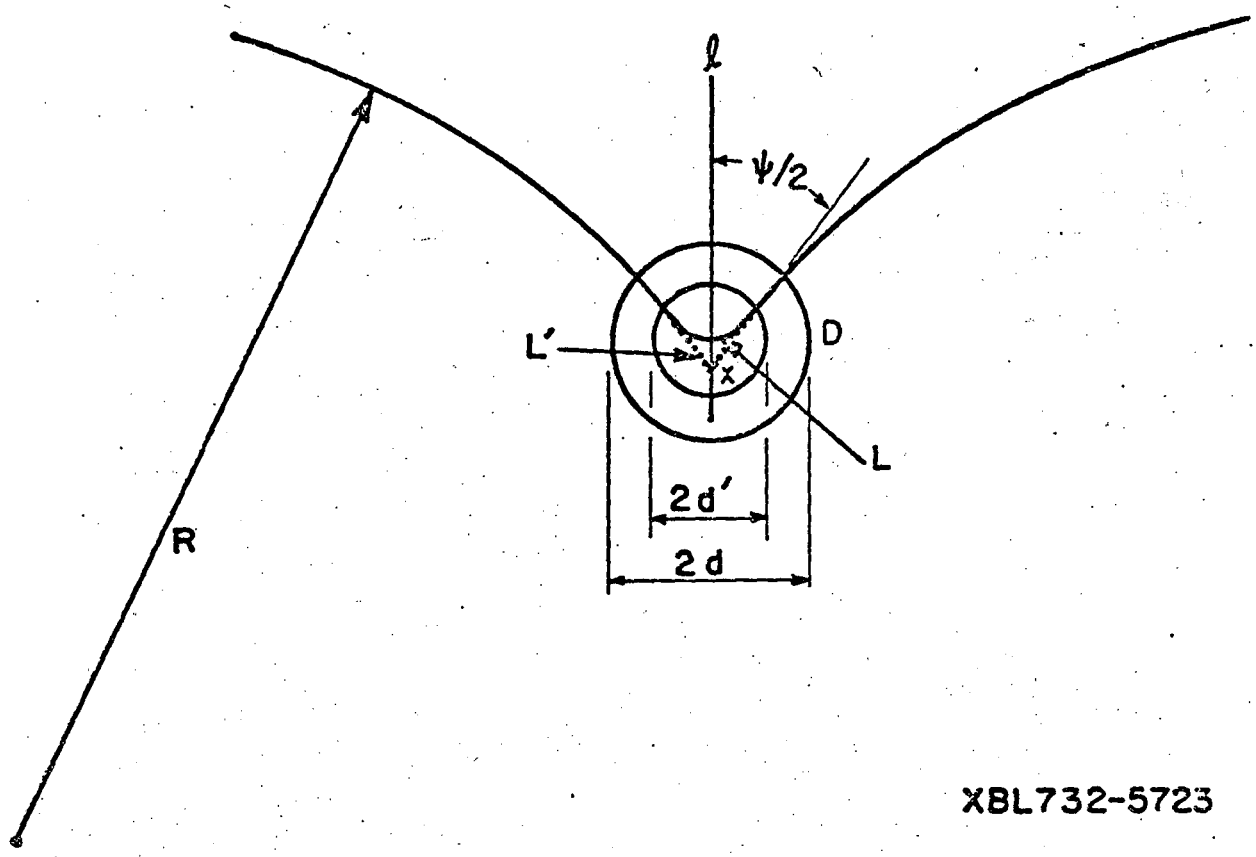

Fig. 1

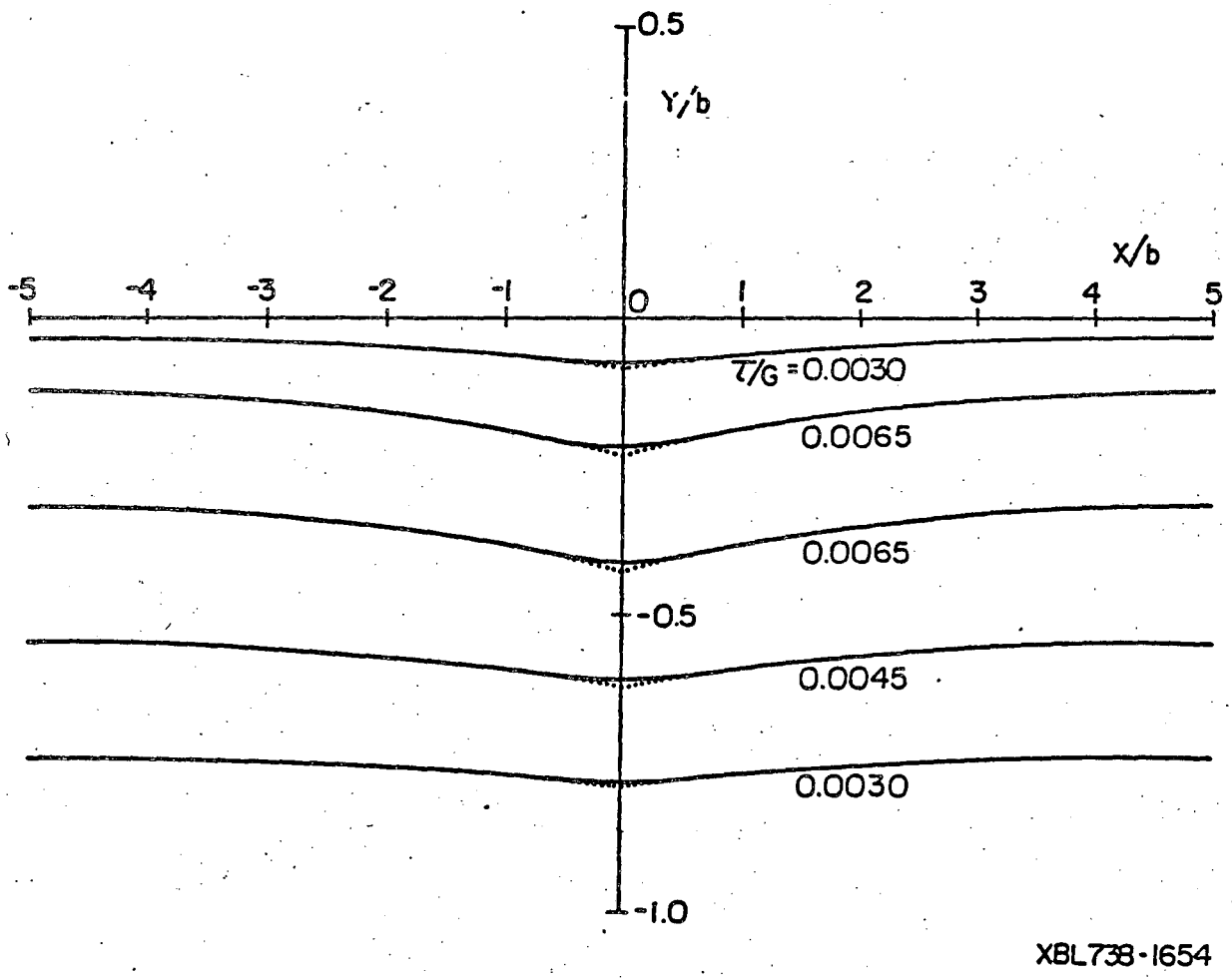
0.5
Y/b
X/b
-5
-4
-3
-2
-1
0
1
2
3
4
5
τ/G = 0.0030
0.0065
0.0065
-0.5
0.0045
0.0030
-1.0
XBL738-1654

Fig. 2

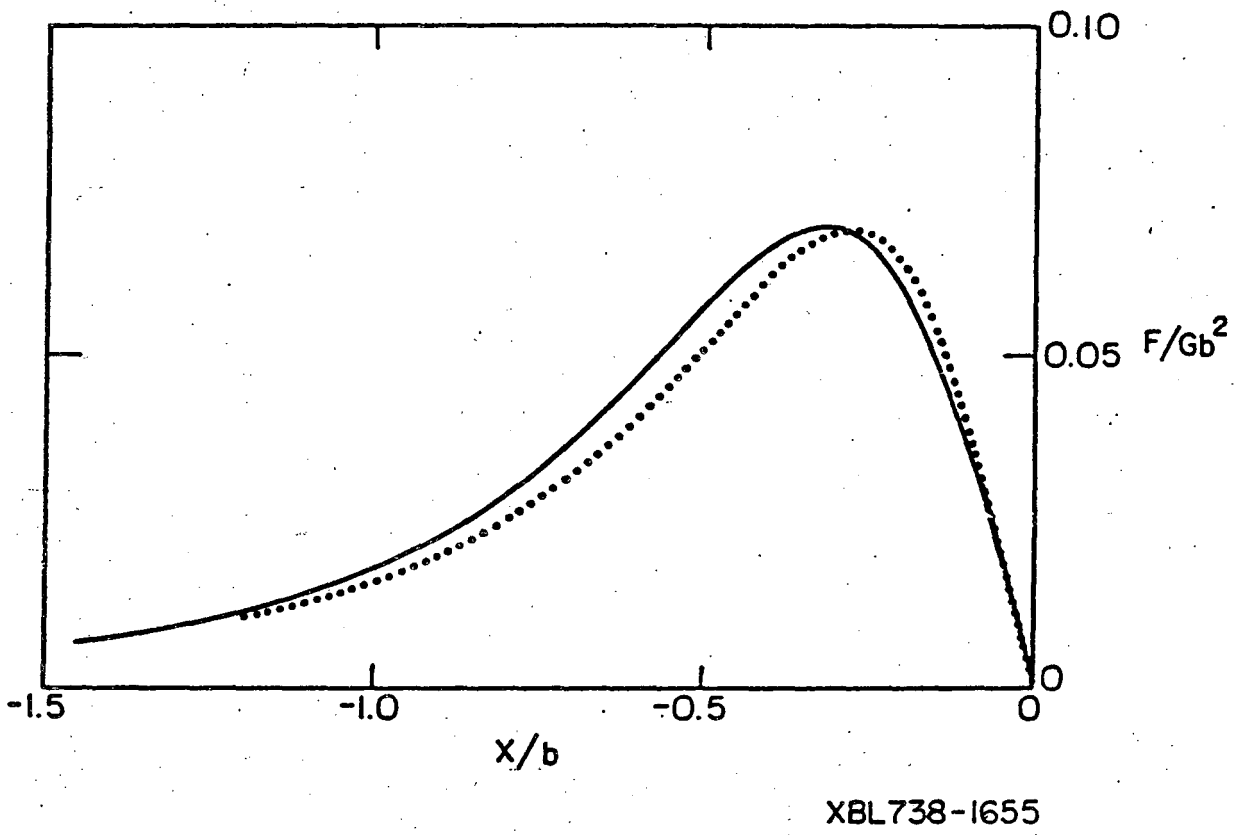

Fig. 3

LEGAL NOTICE

This report was prepared as an account of work sponsored by the United States Government. Neither the United States nor the United States Atomic Energy Commission, nor any of their employees, nor any of their contractors, subcontractors, or their employees, makes any warranty, express or implied, or assumes any legal liability or responsibility for the accuracy, completeness or usefulness of any information, apparatus, product or process disclosed, or represents that its use would not infringe privately owned rights.

TECHNICAL INFORMATION DIVISION
LAWRENCE BERKELEY LABORATORY
UNIVERSITY OF CALIFORNIA
BERKELEY, CALIFORNIA 94720