LBL-22182 c.2

# Lawrence Berkeley Laboratory

UNIVERSITY OF CALIFORNIA

RECEIVED
LAWRENCE
BERKELEY LABORATORY

OCT 27 1986

LIBRARY AND
DOCUMENTS SECTION

Presented at Quark Matter '86, Fifth International Conference on Nucleus-Nucleus Collisions, Pacific Grove, CA, April 13-14, 1986

ROLE OF TRACKING IN FUTURE RELATIVISTIC HEAVY ION EXPERIMENTS

C.R. Gruhn

September 1986

TWO-WEEK LOAN COPY

This is a Library Circulating Copy which may be borrowed for two weeks.

NUCLEAR SCIENCE DIVISION

LBL-22182 c.2

Prepared for the U.S. Department of Energy under Contract DE-AC03-76SF00098

## DISCLAIMER

This document was prepared as an account of work sponsored by the United States Government. While this document is believed to contain correct information, neither the United States Government nor any agency thereof, nor the Regents of the University of California, nor any of their employees, makes any warranty, express or implied, or assumes any legal responsibility for the accuracy, completeness, or usefulness of any information, apparatus, product, or process disclosed, or represents that its use would not infringe privately owned rights. Reference herein to any specific commercial product, process, or service by its trade name, trademark, manufacturer, or otherwise, does not necessarily constitute or imply its endorsement, recommendation, or favoring by the United States Government or any agency thereof, or the Regents of the University of California. The views and opinions of authors expressed herein do not necessarily state or reflect those of the United States Government or any agency thereof or the Regents of the University of California.

# ROLE OF TRACKING IN FUTURE RELATIVISTIC HEAVY ION EXPERIMENTS

C.R. GRUHN*

Lawrence Berkeley Laboratory
Univeristy of California
Berkeley, California 94720

## 1. INTRODUCTION

Predicting the role of tracking in future relativistic heavy ion (RHI) experiments is as dangerous as making a weather forecast. As with the weather you can be sure it will happen. Essentially all electronic high energy experiments have used some form of tracking. All of the planned experiments for the CERN SPS RHI program use tracking. In this talk I will make a brief physics justification for tracking, emphasizing the need for correlations. I shall examine some of the boundary conditions imposed upon tracking for the SPS/RHIC experiments. The CERN experiment NA36 will be used as an example. Lastly I will examine some future alternatives which might facilitate tracking in RHI experiments.

## 2. PHYSICS JUSTIFICATION OF TRACKING IN RHI EXPERIMENTS

The BNL proposal RHIC and QUARK MATTER [ref.1] summarizes the physics justification of RHI in a table describing experimental probes for new states of matter. In table 1. I have reconstituted this table along with an accessment on the usefulness of tracking. The table describes the experimental probes for global event parameters, indicators of a phase transition and penetrating probes carrying direct information from the plasma.

Acknowledgment
This work was supported by the Director, Office of Energy Research, Division of Nuclear Physics of the Office of High Energy and Nuclear Physics of the U.S. Department of Energy under Contract DE-AC03-76SF00098.

---

*Present Address : CERN, Geneva, Switzerland

**Table I**
**Relativistic heavy ion physics and the role of tracking.**

| Signal | Tracking Yes(Y),useful (U),no(N) | Components | |
|---|---|---|---|
| Inclusive particle spectra | U | Indicators of temperature, size and density | Global event parameters |
| Particle interferrometry | Y | | |
| Multiparticle correlations in rapidity, energy, flow | N | Long range correlations and macroscopic fluctuations | |
| Local charge correlations | Y | Color screening effects in plasma different from normal pair production by vacuum polarization | Indicator of a phase transition |
| Strange particle production, particle flavour ratios | Y | Chemical equilibrium in hot plasmas gives enhanced strangeness production | |
| Stable multi quark states | Y | 6-quark and higher configurations readily assembled in the plasma. | |
| Direct photon production | N | Coherent emission from local charge fluctuations, hadronic decays; direct emission from plasma | Penetrating probes, direct information from plasma |
| Lepton pair production | Y | Structure function of quark and gluons | |
| High $P_T$ jets | N | Propagation of quarks and gluons through nuclear matter | |

In each of these cases it is difficult to imagine experiments without tracking. The particle interferrometry requires close spacial (momentum) correlations and therefore tracking. Strange particle production requires recognition of the decay pattern and/or a velocity and momenta measurement for particle identification. Both of these find needs for tracking. Lepton pair production usually involves momenta measurements to allow invariant mass reconstruction and also finds a use for tracking.

We can expect tracking to be involved in future RHI experiments and is justified by the physics of this new endeavor.

On the experimental side tracking in RHI experiments has a further justification. Tracking has been shown to be extremely useful in discrimination against background processes in the CERN underground experiments. Two examples of this are secondary interactions and double events.

## 3. CORRELATIONS NEEDED

It is to be anticipated that some form of correlation of the signals (table 1.) will be useful in minimizing ambiguities in interpretation of results. All of the planned CERN SPS RHI experiments incorporate correlations. See figure 1.

Each of these experiments correlate signals of strangeness or dilepton pair production or single photons with the global event parameters such as transverse energy flow and transverse energy flow fluctuations.

Standardization of the targets between experiments will keep the correlations complementary. In addition the correlations between lower energy (60 AGeV/c) (nuclear stopping) and a higher energy (200 AGeV/c) (nuclear transparency) will give insight in production mechanisms.

## 4. SPS/RHIC EXPERIMENTS

In this section I present some of the global features of events anticipated for the SPS/RHIC experiments [ref.1]. In figure 2 I show the HIJET calculated rapidity distributions for Au+Au collisions at three different energies having mean charged particle multiplicities between 400 and 2000. Central collisions are expected to have higher mean multiplicities by a factor of about three. THE MULTIPLICITIES ARE HIGH.

Figure 3 shows a possible experimental configuration for both fixed target and collider modes. Superimposed upon the experimental layout we show rapidity, mean momenta, and mean multiplicity per mm square at 100 mm. For example for a 100 AGeV/c (Au+Au) fixed target experiment we expect a mean momenta of 5 GeV/c at central rapidity Y=0 and mean multiplicity of

COMPLIMENTARY CORRELATIONS

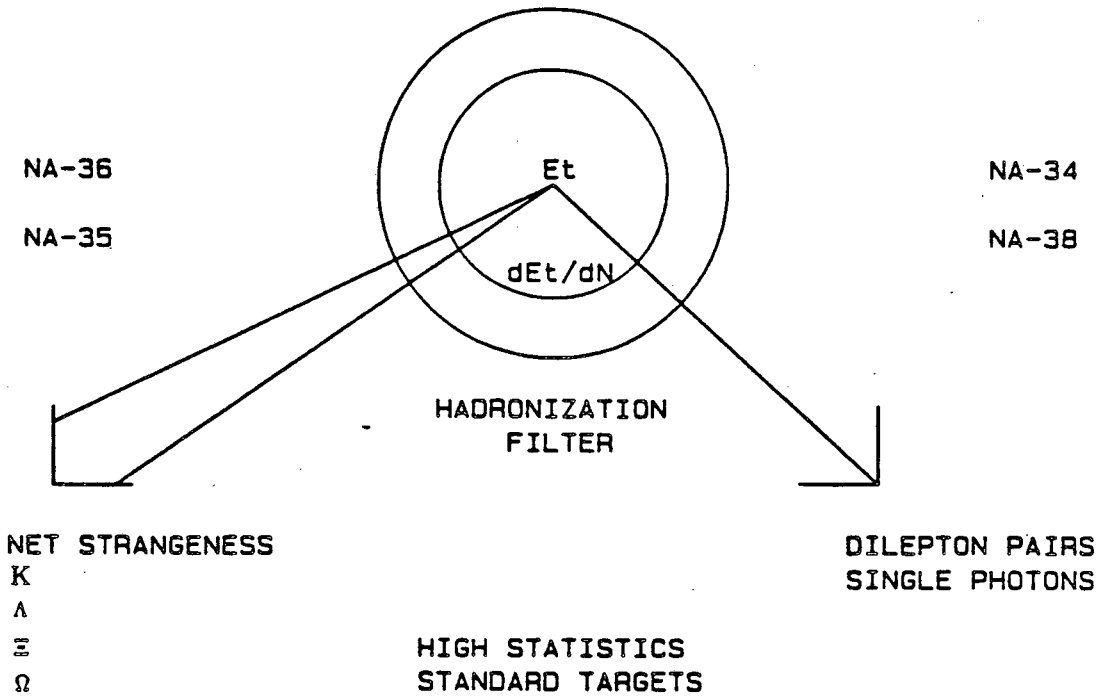


NUCLEAR STOPPING

60 AGeV/c

NUCLEAR TRANSPARENCY

200 AGeV/c

O16, S32

FIGURE 1

Complementary Correlations

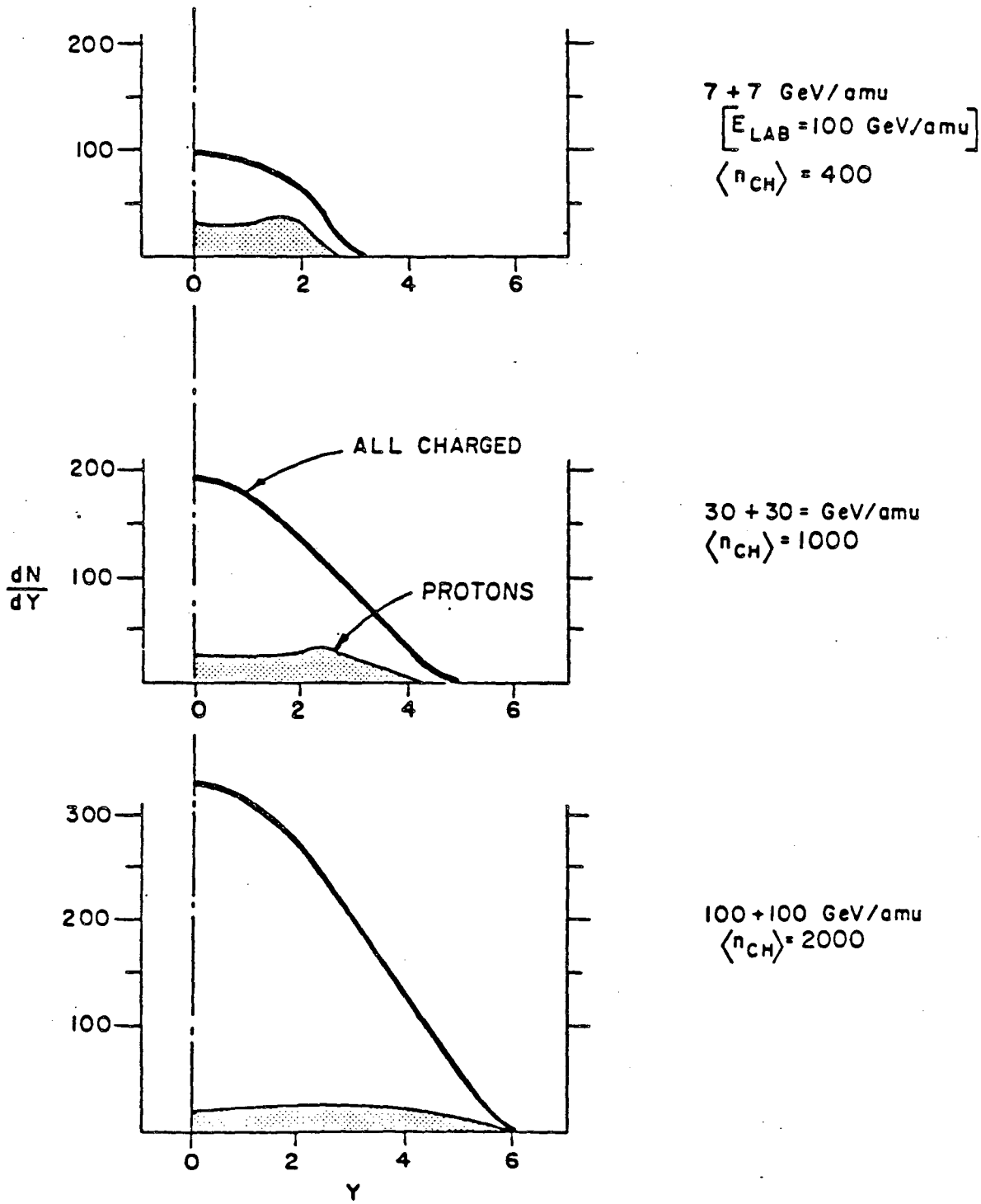


FIGURE 2

Hijet rapidity distributions

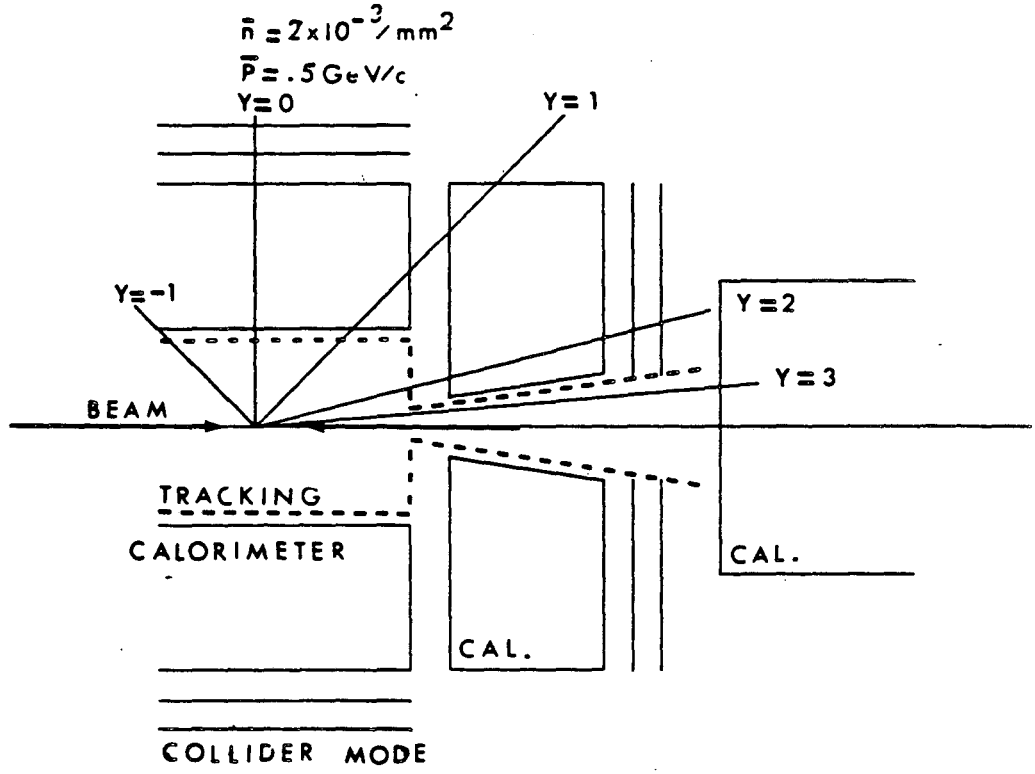


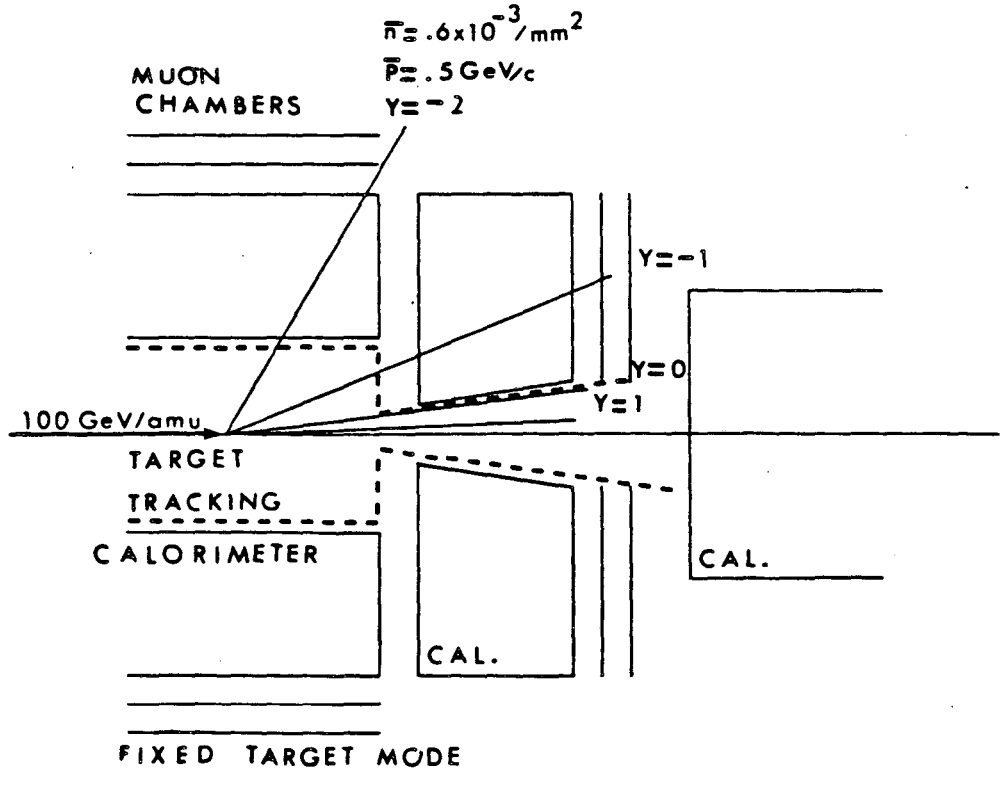


FIGURE 3

Collider mode and fixed target mode experimental configurations

.26/mm$^2$ at 100 mm in the laboratory. Note the approximate equivalence (from the view of tracking) in momenta and multiplicity between the fixed target mode "target" rapidity region and the collider mode "central" rapidity region. The "central" rapidity and "projectile fragment" rapidity regions of the fixed target mode have higher mean momenta and particle densities than the equivalent energy collider mode.

THUS THE TRACKING TECHNIQUES AND EXPERIENCE FROM THE SPS RHI EXPERIMENTS CAN BE USED AS A GUIDE IN PLANNING RHIC EXPERIMENTS. Similarly the LEP experience where tracking detectors experience peak particle densities in jets of $10^3$ particles/steradian (but total multiplicities of 10-20) is expected to be useful.

The following are major constraints on tracking for RHI experiments :

1. High multiplicity densities (between $10^3$ and $10^4$ particles/steradian).
2. High total multiplicities (approaching $10^4$ particles for contral collisions).
3. Large range in $Z^2$ (ionization density)(6400:1).
4. High delta ray probability ($Z^2$ and high multiplicity).

Because of these constraints unambiguous space point (TPC) tracking is essential for the RHI experiments (vectored tracking would be better). Constraints 1 and 4 demand a very large number of pixels in the tracking detector volume. On the frontal view (seen by the particle) $10^3$ pixels/particle is probably desirable because of correlations and background processes. Along the track 100 hits (pixels) is not unreasonable (10 is too few). Thus we see that we must create $10^4$ tracks. With this it is clear that some form of ECONIMIZATION IS REQUIRED relative to the use of present readout techniques.

Constraint 3 poses potential space charge effects which can perturb the tracking measurement within an event. This effect can be minimized by having a uniform and high magnetic field.

The NA36 SPS fixed target experiment uses a TPC having an effective solid angle of about 0.1 steradians which illustrates one approach to the tracking problems of RHI experiments.

## 5.NA36 TRACKING TPC

The NA36 experiment proposes [ref.2] to measure the net strangeness produced in RHI collisions at the CERN SPS as a possible signal of the quark gluon plasma. The characteristic features of the experiment are :

* A TPC for three dimensional unambiguous space point tracking;

* A magnetic field to sweep most of the produced particles from the TPC and tracking chambers;
* A highly parallel data acquisition system mounted on the TPC;
* Field free tracking chambers;
* Fine grained calorimetry in the forward hemisphere to measure transverse energy and projectile fragment energy.

The TPC is used to detect the strange baryon decays in the rapidity range of 1-4 in the laboratory frame. See figure 4 for the experimental arrangement of NA36.

In figure 5 I show the filtering effect of the strong magnetic field (3 Tesla) used with the NA36 TPC. The solid tracks deflected by the magnet are negative pions having rapidities 1, 2, 3, 4, 5. Omega minus particles having similar momenta follow the same trajectories but have corresponding rapidities of 0.1, 0.3, 0.76, 1.6 and 2.5. Note the placement of the TPC is such that rapidities greater than 3 for pions (0.76 for omegas) are accepted. The magnet filters out the low mass and low momenta particles while passing the heavier (strange baryons) particles. In this way the number of tracks in the TPC is reduced to about 30 for an average event ($^{16}O+^{197}Au$ 200 AGeV/c).

Since the NA36 TPC is the first TPC to be designed for RHI experiments I list some of its characteristics in table 2. It will operate in the unusually high magnetic field of 3 Tesla (the highest for any TPC constructed to date). The number of readout elements ($1.2\times 10^4$) has the highest density (x7) over other TPC disigns.

The design optimizes the two track resolution ($12mm^2$) (7 x less than anticipated for the LEP TPC designs). The TPC is digital and does not measure dE/dX, thus simplifying the design.

The electronics chain (BNL design) is implimented on the end cap with a high degree of parallelism. The time digitization of the tracks is completed in a pipeline mode with zero suppression all on the end cap. The digitized signals and addresses are multiplexed into only 400 cables which are decoded at a fastbus crate. The data acquisition system is in fastbus and is being designed to take 1000 events/spill [ref.3].

A discussion of the tracking in the NA36 TPC is presented by M. Heiden and also S. Lindenbaum to this conference.

## 6. FUTURE ALTERNATIVES

The future alternatives for tracking in RHI experiments can be expected to evolve on two fronts, data acquisition systems and detector design. I shall discuss both briefly here.

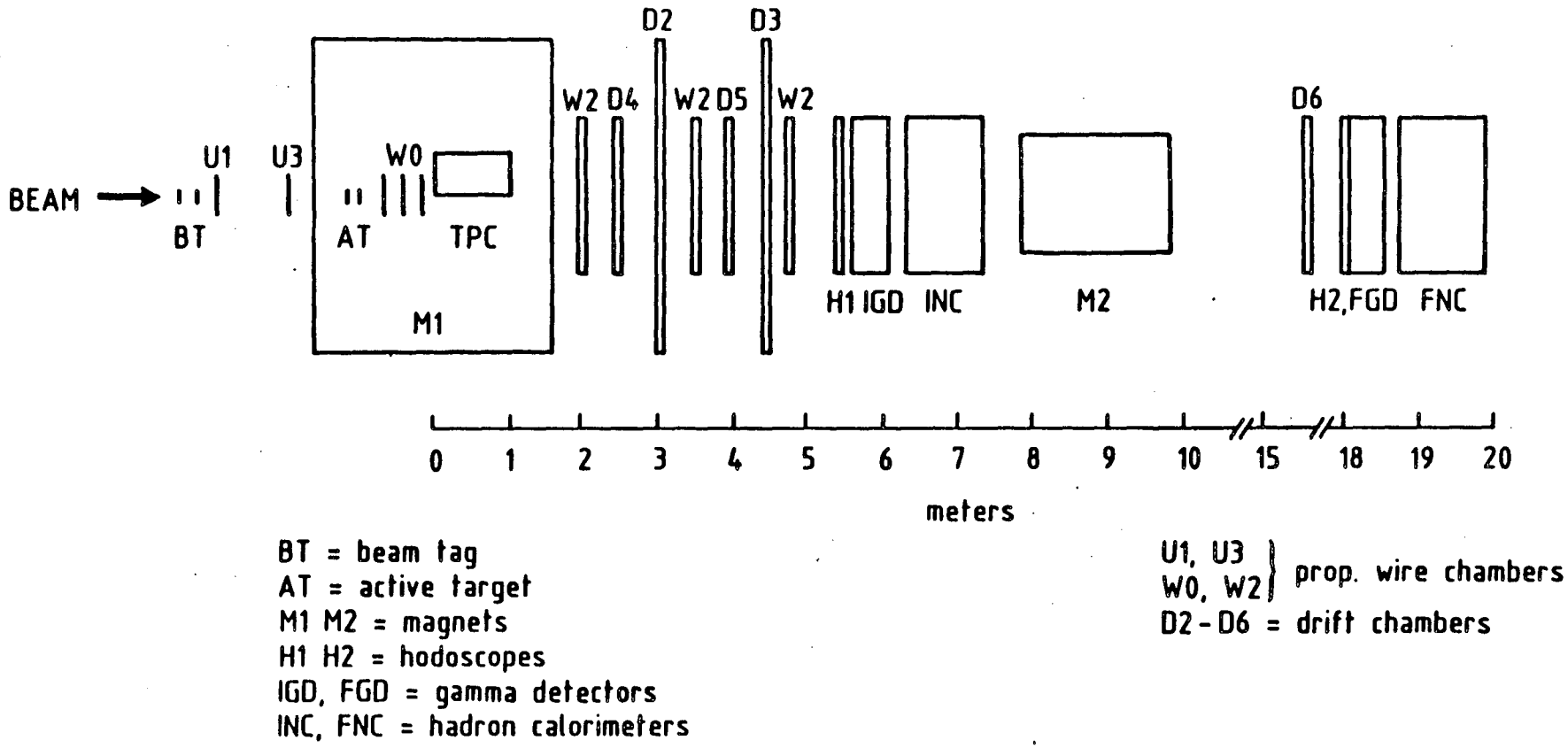


FIGURE 4

NA36 experimental arrangement

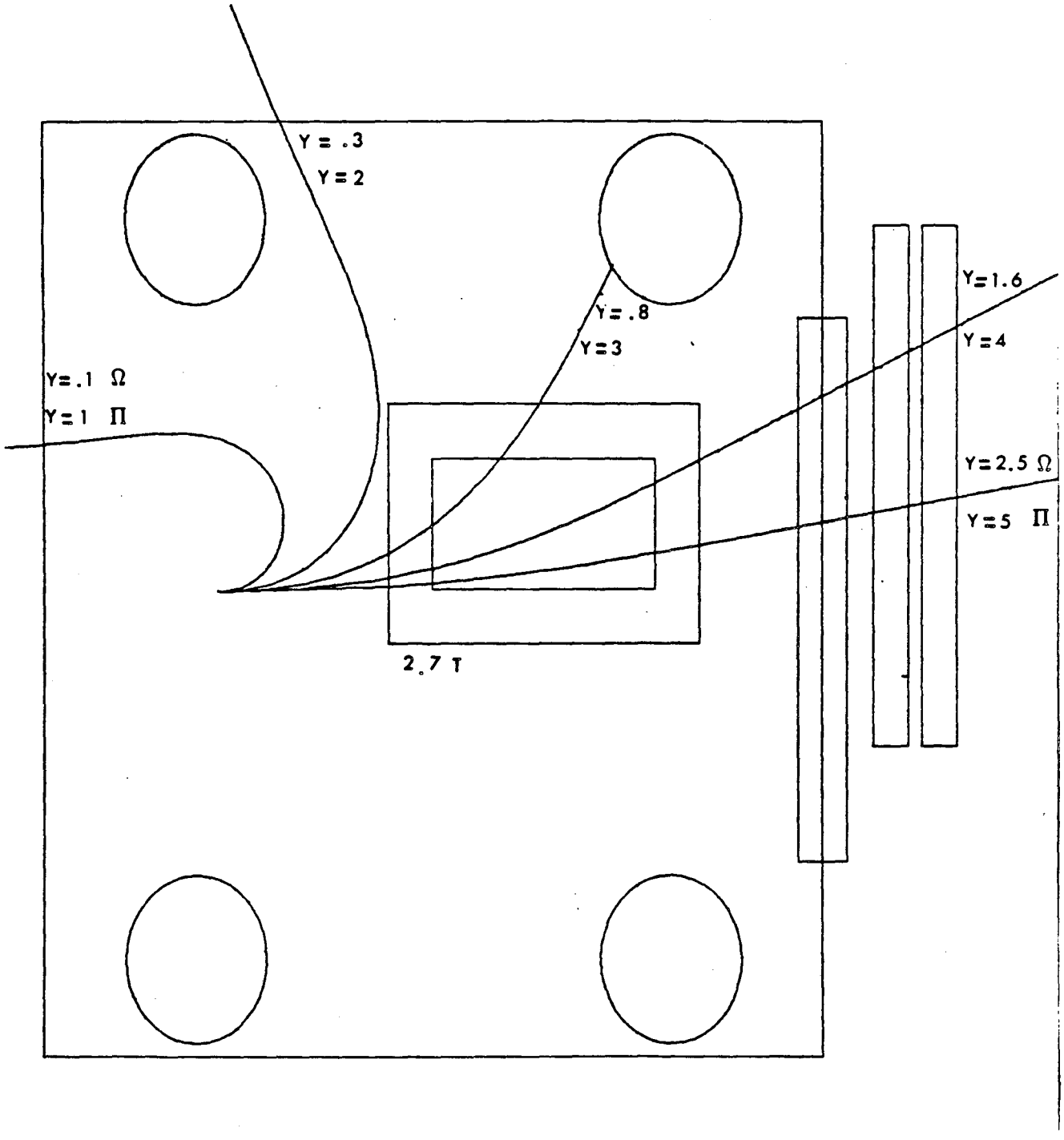


FIGURE 5

Filtering effect of a 2.7 T magnetic field on pions and omegas

## Table 2
## NA-36 TPC

| parameters | | units |
|---|---|---|
| B | 3.0 | Tesla |
| Gas | $Ar\text{-}CH_4$ (9%) | |
| E/P | 0.17 | |
| E | 13.5 | kV/m |
| P | 1.0 | Bar |
| Omega - Tau | 21 | |
| Drift velocity | 5.1 | cm/$\mu$s |
| Drift distance | 0.5 | m |
| End cap area | 0.5 | $m^2$ |
| Volume | 0.25 | $m^3$ |
| Readout elements | $1.2 \times 10^4$ | |
| readout density | 35000 | $1/m^2$ |
| dE/dx | no | |
| Spatial resolution | | |
| single track | 0.3 | mm |
| two track | 4 x 3 | $mm^2$ |

Advances in the design of data acquisition systems for tracking are expected to reflect an "up stream" movement. That is to say, more of the processing is expected to occur closer to the detector. Such is the case with the NA36 data acquisition system described above.

D.M. Sendall reviews this trend in describing REAL-TIME SYSTEM ARCHITECTURES at the Computing in High Energy Physics Conference in Amsterdam (1985). He emphasizes the trend to a highly parallel architecture with a modular system design in the data acquisition system.

G. Darbo et al. working on a trigger processor for the LEP DELPHI experiment show how one might ultimately process the tracks using custom IC gate arrays. This work intitled "A High Parallelism Structure for Real-Time Pattern Recognition Applied to Colliding Beam Experiments" is described in a three day in-depth review on the IMPACT OF SPECIALIZED PROCESSORS IN ELEMENTARY PARTICLE PHYSICS Padoua (1983). They describe a contiguity mask processor which sorts out TPC hit patterns according to tracks in 300ns. Then each set of track data is routed to a cluster of parallel processors which yield the track parameters in 2μs.

One can expect future developments to continue in this area with the advances being realized such as field programmable logic devices (FPLD) and electronicly erasible field programmable devices (FPLD) having array sizes now larger than $10^4$.

Aside from the advanced design of the NA36 TPC we can expect new developments incorporating additional processing at the TPC. Some features that are likely to be included in new designs are:

* Vectored tracking by virtue of electrode geometries or clusters;
* Better two track resolution with finer grained sense electrodes;
* Minimal space charge effects resulting from use of lower gas gain and more efficient electron gating and ion trapping;
* Parallel processing of tracks on the end cap resulting from new electronics developments.

The new designs are likely to evolve from recent concepts such as MSC multistep chamber [ref.4] or new concepts as speculative as amplification at a semiconductor surface in a gas using a modified thin film field emmision cathode design [ref.5].

## 7. SUMMARY

Tracking will play a role in future RHI experiments. Tracking, in fact, is necessary to expose a significant portion of the physics in RHI experiments. All planned RHI experiments at the SPS use tracking in someway! Tracking will facilitate the type of correlations required in RHI experiments.

The track numbers and densities along with present technology limit our ability to plan RHI experiments involving $4\pi$ tracking. New developments are needed.

The "up stream move" with intelligence (processing) moving to the detector with a high degree of parallelism is expected to minimize track processing limitations.

RHI experiments at the SPS are good preparation for RHIC experiments.

ACKNOWLEDGEMENTS

The author is thankful for the many stimulating interactions with his LBL colleagues M. Cherney, W. Geist, D. Greiner, M. Heiden, J. Kuipers and the NA36 collaboration.

REFERENCES

[1] BNL Report 51801 (1984)

[2] CERN/SPSC 84-13, SPSC/P196 (1984)

[3] S. Eiseman et al., IEEE NS (1986), to be published (1986)

[4] A. Peisert, NIM 217 229 (1983)

[5] C.A. Spindt et al., Journal de Physique 45 C9-269 (1984)

This report was done with support from the Department of Energy. Any conclusions or opinions expressed in this report represent solely those of the author(s) and not necessarily those of The Regents of the University of California, the Lawrence Berkeley Laboratory or the Department of Energy.

Reference to a company or product name does not imply approval or recommendation of the product by the University of California or the U.S. Department of Energy to the exclusion of others that may be suitable.

*LAWRENCE BERKELEY LABORATORY*
*TECHNICAL INFORMATION DEPARTMENT*
*UNIVERSITY OF CALIFORNIA*
*BERKELEY, CALIFORNIA 94720*