LBL-22243 c.2

# Lawrence Berkeley Laboratory
UNIVERSITY OF CALIFORNIA

## Accelerator & Fusion Research Division

RECEIVED
LAWRENCE
BERKELEY LABORATORY
JUN 9 1987
LIBRARY AND
DOCUMENTS SECTION

Presented at the 1987 Particle Accelerator Conference, Washington, DC, March 16–19, 1987

**THE BEVATRON LIQUID NITROGEN CIRCULATION SYSTEM**

D. Hunt and G. Stover

March 1987

*TWO-WEEK LOAN COPY*

*This is a Library Circulating Copy which may be borrowed for two weeks.*

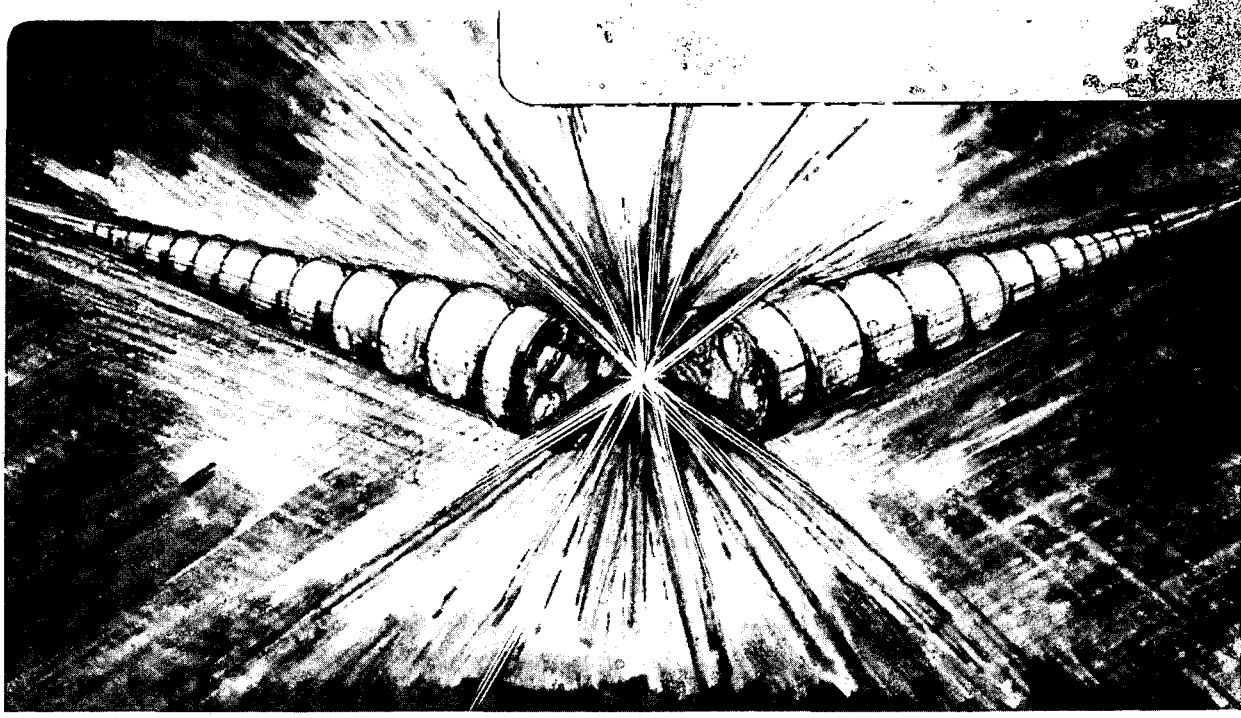

Prepared for the U.S. Department of Energy under Contract DE-AC03-76SF00098

LBL-22243 c.2

## DISCLAIMER

This document was prepared as an account of work sponsored by the United States Government. While this document is believed to contain correct information, neither the United States Government nor any agency thereof, nor the Regents of the University of California, nor any of their employees, makes any warranty, express or implied, or assumes any legal responsibility for the accuracy, completeness, or usefulness of any information, apparatus, product, or process disclosed, or represents that its use would not infringe privately owned rights. Reference herein to any specific commercial product, process, or service by its trade name, trademark, manufacturer, or otherwise, does not necessarily constitute or imply its endorsement, recommendation, or favoring by the United States Government or any agency thereof, or the Regents of the University of California. The views and opinions of authors expressed herein do not necessarily state or reflect those of the United States Government or any agency thereof or the Regents of the University of California.

# THE BEVATRON LIQUID NITROGEN CIRCULATION SYSTEM*

D. Hunt and G. Stover
Lawrence Berkeley Laboratory
University of California
Berkeley, California 94720

## Abstract

A nitrogen liquefier and computer controlled valving system have been added to the Bevatron cryoliner vacuum system to cut operating costs by reducing liquid nitrogen consumption. The computer and interface electronic systems, which control the temperatures of twenty-eight liquid nitrogen circuits, have been chosen and designed to operate in the Bevatron's pulsating magnetic field. The nitrogen exhaust is routed back to a liquefier, of about five kilowatt capacity, liquefied, and rerouted through the cooling circuits. A description of the system and operating results are presented.

## Introduction

The high vacuum, in the $10^{-10}$ torr range, necessary for the acceleration of heavy ions in the Bevatron is maintained by cryogenic pumping. A liner which operates at about 10 K is surrounded by a liquid nitrogen (LN) cooled heat shield. Liquid nitrogen is primarily used to reduce the heat load to the 10 K refrigeration system. To achieve this in the past has taken about 2-1/2 million liters of liquid nitrogen per year at a cost of approximately $360,000. The system described below has significantly increased the efficiency of LN utilization, cutting operating costs almost in half.

## General System Description

Liquid nitrogen is supplied locally from a 980 gallon tank located on top of the Bevatron concrete shielding blocks. Two lines transfer liquid nitrogen from this tank to two distribution boxes attached to the Bevatron's East and West tangent tanks. Inside the Bevatron vacuum tank, the nitrogen supply is split into twenty-eight different cooling circuits. The flow through each circuit is controlled by a motor actuated valve where these lines leave the Bevatron vacuum. The temperature at the exhaust of each circuit is measured by a linear temperature sensor and monitored by computer. The exhaust valves are controlled by the computer to maintain preset temperatures. The exhaust nitrogen gas, typically at a temperature of about 130 K, is routed back to the liquefier where about half of it is recondensed and pumped back into the supply tank by a transfer vessel. The excess gas is exhausted to the atmosphere.

The differential pressure across the circuits is monitored and controlled by computer. The circuits are thus independent of changes in system pressure such as occur when the local tank is filling or when the cryogenerator goes off. Also the differential pressure can be adjusted to optimize system performance. The liquid nitrogen consumption is reduced in three ways: 1) liquid nitrogen is produced by the liquefier, 2) better control of the nitrogen exhaust reduces the waste due to the venting of liquid, 3) and temperature control allows the circuits to be operated at temperatures substantially above the boiling temperature of liquid nitrogen which reduces the heat load to the circuits.

*This work was supported by the Director, Office of Energy Research, Division of Nuclear Physics, Office of High Energy & Nuclear Physics, Nuclear Science Division, U.S. DOE under Contract No. DE-AC03-SF00098.

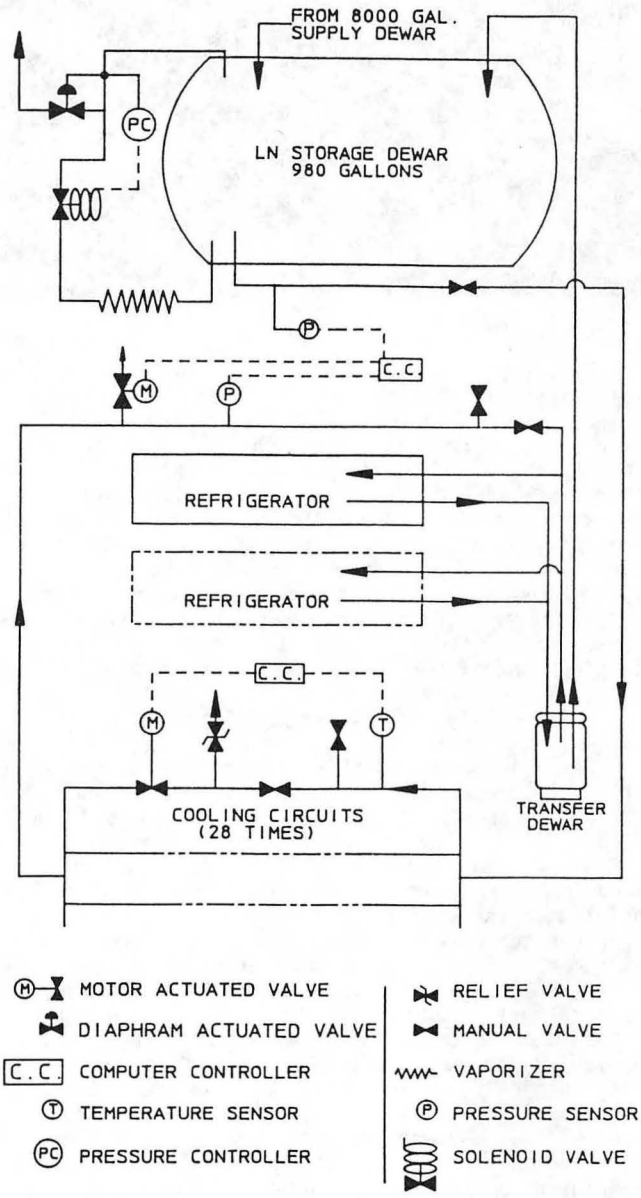


Fig. 1 - Plumbing schematic

The nitrogen gas is liquefied by a Philips four-cylinder Sterling-cycle refrigerator, model PPG 440[1]. The cooling capacity of this refrigerator increases significantly with increased temperature. At 78 K the rated output is 3.6 kilowatts. At 89 K it is 5.2 kilowatts. This is a 44% increase in output. In order to raise the condensing temperature, thus maximize liquid nitrogen production, the system is operated at as high a pressure as practical with the existing equipment. This is limited to about 35 psig by the transfer lines. Provisions have been made for the addition of a second refrigerator which may be added if our experience shows that it is economically justified.

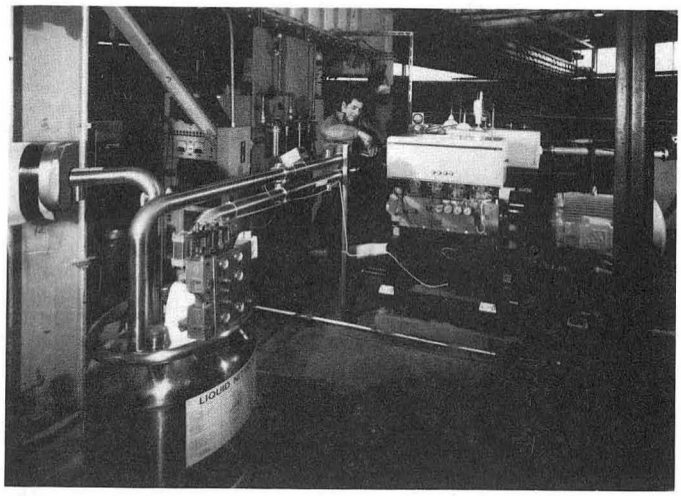

Fig. 2 - Liquefier CBB 871-189

For temperature control, the computer compares the temperature of the exhaust nitrogen with a specified temperature band. If the temperature is out of this band, the valve is pulsed open or closed to correct the temperature. Controlling temperature with a valve at the exhaust is basically an unstable system. As the nitrogen gas becomes colder and thus more dense the resistance to its flow decreases resulting in more flow which further reduces the temperature. Similarly, if the temperature is too warm, the circuit tends to warm further. To reduce large temperature oscillations, the software includes independent gain and damping control for each valve.

## Electrical System Specifications

Several important physical and electrical design criteria were considered in the implementation of this control system. The number of control and monitor points (60 monitor and 29 control), their radial distribution, fairly simple repetitious algorithmic control processes and a cost effective implementation pointed to the selection of a small but expandable microprocessor based control system. The industrial environment and the need for software integrity even during a.c. power outages dictated the selection of a battery backed, stand alone system. Features such as standard high level languages (Basic, PL/M, etc.), a proven software development system, and modular construction would enhance implementation and maintability. Additionally the entire system, the controller, I/O electronics, and the sensors, would be immersed in a very strong ramping magnetic field generated by the main ring magnets of the Bevatron. With the machine operating at a peak field of 12.75 kilogauss the leakage field measurements at a number of the sensor locations has averaged 50 gauss/sec with higher a.c. frequency components at multiples of 59 Hz.

Given the above design criteria the Analog Devices micro-mac 5000 system was selected as the most suitable processor for our requirements.

## Processor

As seen in figure #3, the micro-mac 5000 system controls 29 six-turn D.C. motor-controlled valve assemblies, each with a corresponding temperature sensor and shaft position monitor. Additionally two absolute and one differential pressure sensor are monitored directly without an I/O electronic interface.

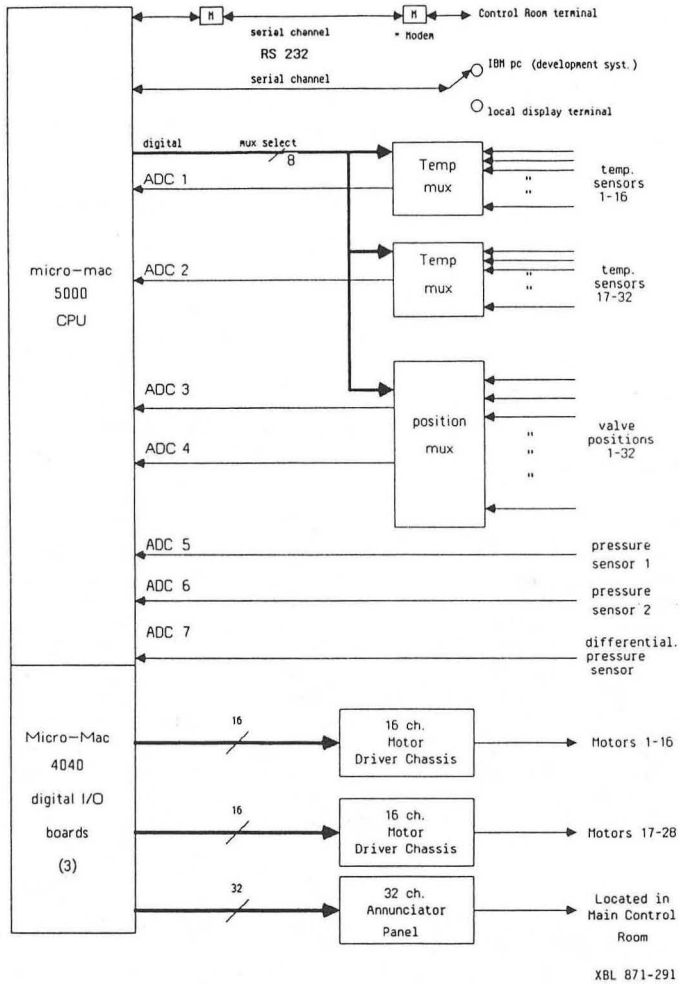


Fig. 3 - Electrical schematic

The seven slot processor chassis presently contains one central processor card and three digital I/O expander cards. Each card has it's own on-card a.c./d.c. power supply for system modularity and the processor R.A.M. memory (expandable to 128K) is battery backed. This feature is particularly useful not only for system reliability but in ongoing program development while the system is in operation.

Software can be completely developed on any I.B.M. p.c. using Analog Devices DOS based software. Further, once a program has been developed or modified it can be down-loaded to a spare processor card which is then transported and swapped with the active processor obviating the need to burn and mount PROM's with every program change. The ROM memory can be fixed when software has been fully debugged and tested.

The processor has two communications ports (RS -232C, -422 or -423) for networking other systems or in this specific application to drive local and remote display terminals. All analog signals from the temperature and valve position chassis and the individual pressure sensors (a maximum of 12 channels per processor card) pass through on-board signal conditioning modules, and then are multiplexed and digitized by a 12 bit A/D. A majority of the digital I/O for the external multiplexer bus, alarm panel, and the motor driver chassis is controlled by the digital extender cards.

## I/O electronics

Several electronic interface chassis were constructed to economize on the number of analog signals that had to be fed into the processor board. All signals from the temperature and valve position sensors are conditioned and then multiplexed from 64 to 3 channels in their respective interface chassis. These chassis also provide some specialized manual controls and displays not provided by the commercial boards.

The temperature scan panel is one of two chassis which monitors the nitrogen temperatures (nominally 77 to 200 K) at the 28 flow control modules located around the Bevatron ring. The temperature sensor, designated a cryogenic linear temperature sensor (C.L.T.S.)[2], is a linearized dual alloy metallic foil strain gauge laminated into an epoxy-resin base. The resistance of the sensor foil changes linearly with temperature. Each sensor is integrated into a two wire, half bridge network powered by a very stable current source which generates an analog error voltage in direct proportion to the changes in the sensor resistance. Additional electronic systems provide alarm and threshold functions which are monitored by the processor card and relayed to an alarm interface panel in the main control room.

The valve position chassis monitors the position of each valve (three-eighth inch, extended stem cryogenic globe type[3]) in the LN system. A precision 100kΩ ten-turn pot mechanically mounted (see Fig. 4) to the valve shaft is connected in a half bridge circuit and provides a linear voltage output as a function of position.

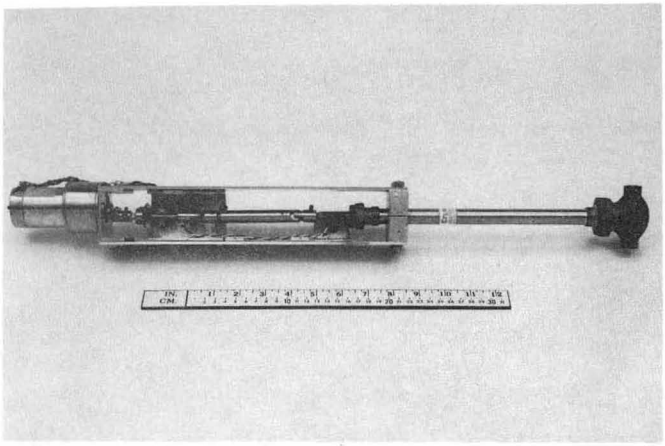

Fig. 4 - Valve with actuator CBB 871-197

The servo control panel provides the electronics to drive 29 high torque permanent magnet valve motors[4]. Logic level signals from the digital I/O cards activate bipolar drivers which provide the d.c. current for the motors. After the LN system has stabilized, the motors nominally require valve correction pulses varying in width from 20 to 250 ms.

The harsh noise environment previously described required that the chassis wiring and system layout be carefully designed to minimize stray field pick-up. All ground loops were assiduously avoided whenever possible through single point grounding of all cable shields and electronic chassis. All low level signal leads were twisted and filtered whenever possible.

## Software and control routines

The software is a syntax compatible (with Microsoft (TM) Basic) block structured language with many advanced programming features found in higher level languages. These include all the standard arithmetic, including BCD math, string operations, functional procedure statements, predefined control commands, software interrupts, real time clock, modular programming, and concurrent I/O operations.

Because this machine does not have multitasking capabilities the software routines are divided into two categories. In the "foreground" there is a procedure which runs continuously, monitoring the temperature and position of each valve module. Using an empirically derived control algorithm based on these parameters the procedure systematically determines whether to open, close, or ignore a change in each valve position once every cycle. In the "background" there are routines to take operator requests from a terminal and to display the selected information. These routines allow the user to change certain operating conditions of the valves interactively. Two software interrupts check the displays for any updates and activate the main scanner routine.

## Performance

When transfer losses and overhead charges are included, the cost to the project of liquid nitrogen last year at the local tank was about $.19 per liter. At peak system performance, the cryogenerator produces over 100 liters of liquid nitrogen per hour, and the new control system's savings are about 60 liters per hour. This results in a reduction in the cost of liquid nitrogen of over $20,000 per month.

Operation of the system during its commissioning period has not been at peak efficiency. Problems with the cryogenerator, the most serious being failures of the main shaft seal and bearing, have caused significant downtime. These reliability problems have arisen, according to Philips, because of some not thoroughly debugged engineering improvements on their older (and basically very reliable) cryogenerator system. We have received excellent service support from Philips, and fully expect solid performance in the future.

Additionally, we have experienced problems with the temperature sensors which have shown long term shifts in their calibration, leading to temperature readings higher than actual, and to loss of efficiency for the overall system. We suspect delamination of the sensors themselves, and are in the process of designing a more rugged assembly.

Still, a significant reduction in liquid nitrogen consumption has been achieved. Increased savings are expected as the down time of the cryogenerator is decreased and the shifting of the temperature sensors is corrected.

## Acknowledgements

Special acknowledgements are made for the contributions of D. Anderson, W. Burns, D. Lozano, and C. Timossi.

## References

1. Distributed by Koch Process Systems, Inc., 20 Walkup Drive Westborough, MA 01581
2. Manufactured by Vishay Intertechnology, Inc., Micro Measurements group, P.O. Box 306 • 38905 Chase Road Romulus, Michigan 48174
3. Manufactured by Cryolab, 4175 Santa Fe Road, San Luis Obispo, California 93401
4. Manufactured by The Pittman Corporation; sub. of Penn Engineering & Manufacturing Corp., Harleysville, PA. 19438

This report was done with support from the Department of Energy. Any conclusions or opinions expressed in this report represent solely those of the author(s) and not necessarily those of The Regents of the University of California, the Lawrence Berkeley Laboratory or the Department of Energy.

Reference to a company or product name does not imply approval or recommendation of the product by the University of California or the U.S. Department of Energy to the exclusion of others that may be suitable.

*LAWRENCE BERKELEY LABORATORY*
*TECHNICAL INFORMATION DEPARTMENT*
*UNIVERSITY OF CALIFORNIA*
*BERKELEY, CALIFORNIA 94720*