LBL-22244 c.2

Lawrence Berkeley Laboratory
UNIVERSITY OF CALIFORNIA

Accelerator & Fusion Research Division

RECEIVED
BERKELEY LABORATORY
MAY 12 1987
DOCUMENTS SECTION

Presented at the 1987 Particle Accelerator Conference, Washington, DC, March 16–19, 1987

ADJUSTABLE RARE EARTH QUADRUPOLE DRIFT TUBE MAGNETS

B. Feinberg, J. Tanabe, K. Halbach, G. Koehler, and M.I. Green

March 1987

TWO-WEEK LOAN COPY
This is a Library Circulating Copy which may be borrowed for two weeks.

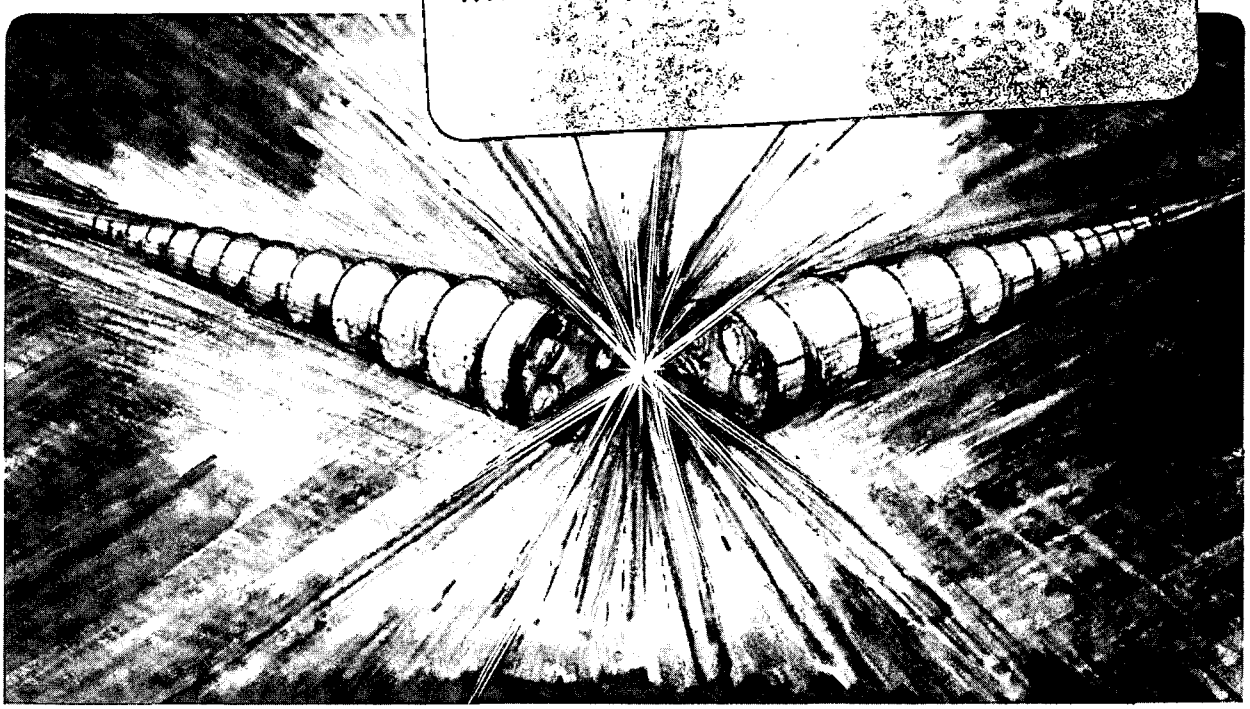

Prepared for the U.S. Department of Energy under Contract DE-AC03-76SF00098

LBL-22244 c.2

DISCLAIMER

This document was prepared as an account of work sponsored by the United States Government. While this document is believed to contain correct information, neither the United States Government nor any agency thereof, nor the Regents of the University of California, nor any of their employees, makes any warranty, express or implied, or assumes any legal responsibility for the accuracy, completeness, or usefulness of any information, apparatus, product, or process disclosed, or represents that its use would not infringe privately owned rights. Reference herein to any specific commercial product, process, or service by its trade name, trademark, manufacturer, or otherwise, does not necessarily constitute or imply its endorsement, recommendation, or favoring by the United States Government or any agency thereof, or the Regents of the University of California. The views and opinions of authors expressed herein do not necessarily state or reflect those of the United States Government or any agency thereof or the Regents of the University of California.

ADJUSTABLE RARE EARTH QUADRUPOLE DRIFT TUBE MAGNETS*

B. Feinberg, J. Tanabe, K. Halbach, G. Koehler, and M.I. Green
Lawrence Berkeley Laboratory
University of California
Berkeley, California 94720

Summary

A prototype permanent-magnet drift tube quadrupole with adjustable field strength has been constructed and tested. The magnet uses iron pole pieces to provide the required field shape along with rare earth permanent-magnet material (samarium cobalt) to energize the magnet.[1] A unique feature of the configuration is the adjustability of the field, accomplished by rotating the outer rings consisting of permanent magnets and iron. In contrast with a previous prototype magnet,[2] this new design uses ball bearings in place of slide bearings to eliminate potential failures. The rotation is now achieved with a bevel gear mechanism. The prototype design also incorporates a new drift tube shell vacuum seal to allow easy disassembly. Tests were made of the magnetic properties and the mechanical performance of this magnet. Field errors are extremely small, and the magnet passed an accelerated ten year lifetime test. It is planned to use this type of magnet to replace 24 of the SuperHILAC prestripper drift tubes.

Introduction

Quadrupole electromagnets for a heavy-ion linac prove a demanding application for magnet technology. An adjustable, hybrid iron-permanent-magnet quadrupole provides a solution to the problems of providing a very high field strength in a small volume. The conceptual design of this type of magnet has been described previously,[1] as well as the rationale for building such a magnet for a drift tube linac. In addition, a prototype was constructed and tested.[2]

The previous prototype used a slide bearing to accomplish the mechanical rotation needed for field adjustment. Galling of the bearing surface between the rings and the main body of the magnet limited the lifetime of the prototype. In this paper we present a short review of the principles of the magnet and discuss a prototype which incorporates a new design that allows for the use of ball bearings in such a magnet.

Magnet Principles

Conventional iron pole-pieces are used to determine the shape of the quadrupole field. The region between the pole-pieces is filled with the rare earth permanent-magnet material. This material behaves as if it were injecting magnetic flux into or subtracting flux from each pole-piece, as the arrows show in figure 1, where the arrows refer to the easy axis of the permanent-magnet material. A ring of iron surrounds the pole-pieces, with permanent-magnet material attached to the inner circumference of the ring. The ring pieces will either add to the flux in each pole-piece, as the figure shows, or by rotating the ring 90 degrees, subtract from the flux in each pole-piece. Two axially separated rings were used for the prototype magnet, with the two rings rotating in opposite directions to ensure that no net torque is introduced during rotation.

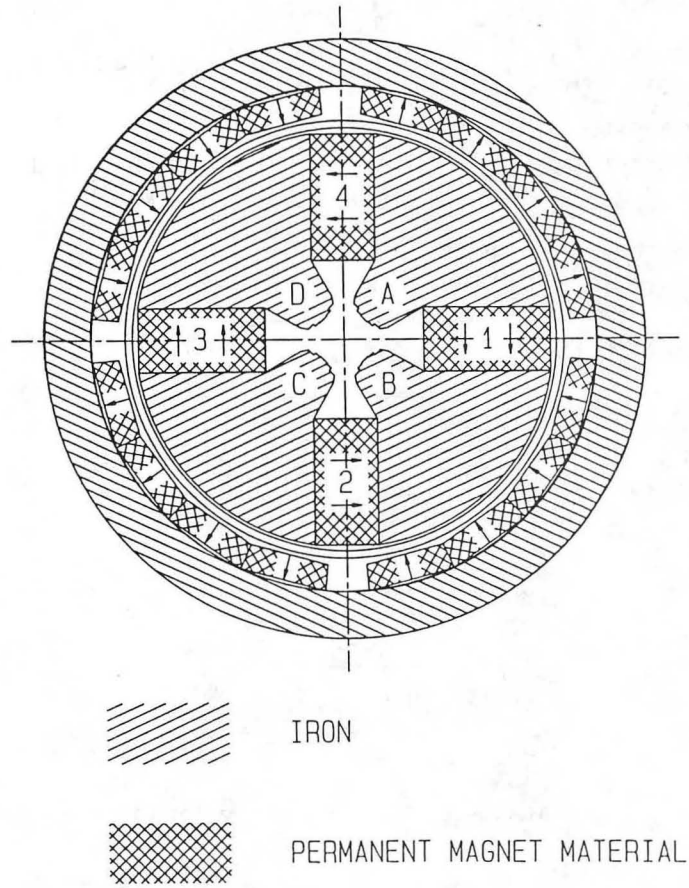

XBL 872-544

Figure 1 - Schematic of the hybrid quadrupole. Note that the outer ring represents two rotatable rings.

Magnet Construction

For a linac which operates on a 24 hour per day basis it is essential that no repairs be required that involve opening the linac and removing the drift tubes. Therefore, the mechanical design of the magnet must be as simple and reliable as possible. Figure 2 shows a diagram of the magnet construction, and a photograph of this actuating mechanism is shown in figure 3. As can be seen in the figures, each flux ring is attached to a circular rack (driven gear) which is turned by the bevel gear. The mechanism uses two circular racks, one for each ring (only one of which is shown), and one bevel gear. Figure 4 shows that ball bearings are mounted on the outer circumference of the rings. This is essential in order to locate the permanent magnets on the rings as close as possible to the pole-pieces, and so that the magnetic permeability of the ball bearings has no effect on the magnetic performance of the quadrupole. The drive motor is connected to the magnet by a shaft

*This work was supported by the Division of Advanced Energy Projects and the Director, Office of Energy Research, Division of Nuclear Physics, Office of High Energy & Nuclear Physics, Nuclear Science Division, U.S. Department of Energy under Contract No. DE-AC03-76SF00098.

that turns the bevel gear. Therefore, the motor can be mounted outside of the linac for easy replacement.

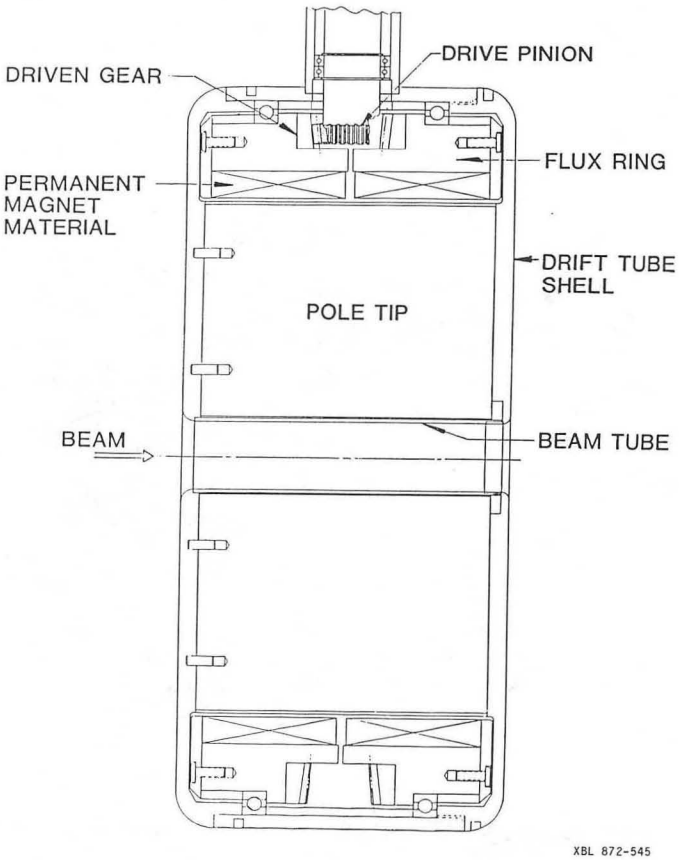

Figure 2 - Diagram of the prototype magnet assembly.

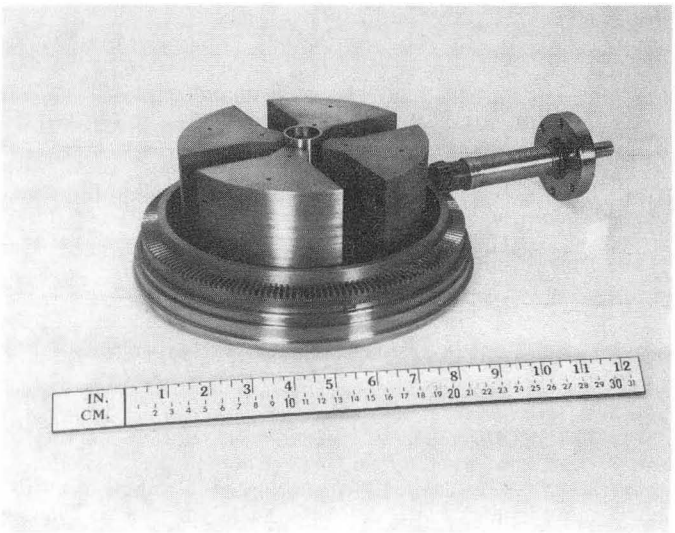

Figure 3 - Photograph of the actuating mechanism of the prototype magnet. Note the bevel gear and circular rack which provide the rotation.

A pair of buried o-rings is used to make the vacuum seal. The drift tube shell screws onto the body of the magnet (the threads are not shown on figure 4), and the o-rings are located inside the shell. The crack on the inner bore of the drift tube is approximately one half the bore diameter from the outside of the shell, well away from the region of high RF currents. The outer crack will need to be plated over to avoid heating. This technique remains to be tested. The magnet is filled with oil to lubri-

Figure 4 - Photograph of the magnet assembly. The new design allows ball bearings to be placed outside the rotating rings. The removable cover is also shown.

lubricate the bearings. The oil can also be circulated with a small pump to provide cooling for the RF heating of the drift tube.

The prototype was cycled repeatedly to test its reliability. It was operated for 105,000 cycles, representing about 10 years of operation based on varying the field over its full range 30 times per day, six days per week. There were no problems with the mechanical system during or after this test.

Magnetic Measurements

The field quality was measured for this magnet after 67,000 cycles. The error fields (in the form of multipole errors) are presented below. Errors which are unique to the hybrid iron-permanent-magnet technology are those due to unequal excitation of the poles. These errors introduce odd harmonics in the multipole fields. In a conventional magnet, pole excitation errors are avoided by wrapping equal numbers of turns around each pole and connecting these turns in series. For the adjustable Rare Earth Quadrupole (REQ) magnet, identical pole excitation is achieved by precisely matching the strength of the permanent-magnet material surrounding each pole tip. See reference 3 for a detailed study of errors in multipole magnets.

Errors due to unequal excitation of adjacent poles, such that opposite pairs of poles are equally excited, do not produce field errors. This error configuration will shift the value of the magnetic equipotential on the symmetry axis between the adjacent poles, but will not affect the magnet quality. However, unequal excitation of opposite poles violates the 90 degree rotational symmetry and contributes odd harmonics to the field.

To minimize the unequal excitation of opposite poles the large blocks between the polepieces should

be arranged so that, referring to figure 1, the excitation strengths of blocks 1 and 3 are matched and the excitation strengths of blocks 2 and 4 are matched. For the rings, the permanent-magnet blocks should be placed such that the difference in strength for pieces located 180 degrees apart is minimized. See reference 2 for more detail on the sorting scheme needed to achieve minimal error fields.

Measurements were made of the field harmonics at the poletip radius for the prototype. Of the odd harmonic measurements, which form the errors unique to the permanent-magnet technology, only the third harmonic is presented since the errors in this multipole are the most serious.

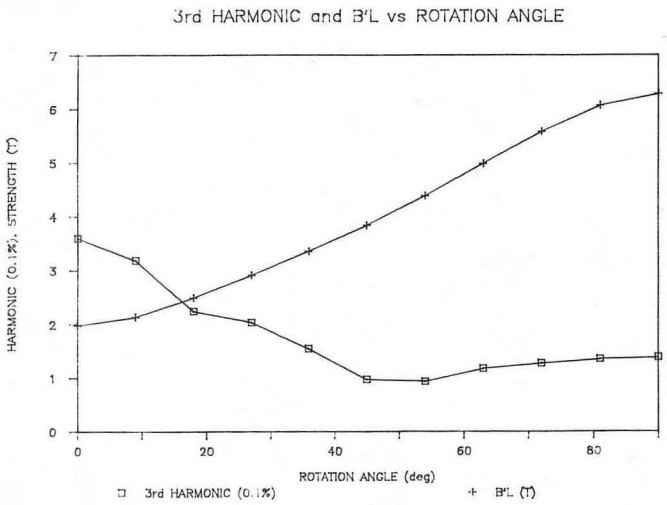

Figure 5 - Third harmonic error field and focusing field strength as a function of the ring rotation angle.

Figure 5 shows the third harmonic, normalized to the fundamental, as a function of rotation angle. This figure shows that the error fields change as a function of the field strength, but that the magnitude is quite small, less than 0.4%. If many identical magnets were being made, as would be the case for a linac, the field errors should be even smaller because there would be a much greater selection of permanent-magnet pieces from which to choose matching pairs. Figure 5 also shows the effective focusing strength, B'L, as a function of the rotation angle of the rings. Note that the focusing strength increases relatively linearly with rotation angle except near the end points. The ratio of maximum to minimum is a factor of three, as is needed for a heavy-ion linac which accelerates ions of vastly different charge-to-mass ratio. The maximum strength is somewhat less than desired. This prototype, however, was designed to test the mechanical arrangement, and has not been optimized to achieve the maximum field strength possible.

Future Plans

Plans have been made for using this type of magnet in the SuperHILAC prestripper. The prestripper is an Alvarez linac used to accelerate ions with a charge-to-mass ratio varying from a high of 0.5 to a low of 0.055. This wide variation, needed to accelerate beams ranging from hydrogen (H_2^+ is used) to uranium, means that the drift tube quadrupoles must be adjustable. Operations are now limited by the current limits of the conventional quadrupoles, which have been set relatively low to avoid conventional magnet failures due to overheating.

The prototype is designed to be the largest of the different size magnets needed in the prestripper, and operates with the highest torque needed to actuate the rings. It therefore provides a good mechanical test for the prestripper magnets, and shows no signs of deterioration. Installation of this type of magnet in the prestripper is expected to result in a transmission increase of about a factor of two for the heaviest beams.[2] Twenty four of these magnets are scheduled to be constructed, for installation in the entrance section of the prestripper during the summer of 1988.

Conclusion

A prototype adjustable hybrid Rare Earth Quadrupole magnet has been built and tested. This magnet behaved as expected magnetically, with very small field errors. These field errors are expected to decrease even further if many identical magnets are constructed, as is the case for drift tube quadrupoles in a linac. The mechanical design of the magnet has been tested by repeated cycling to ensure reliability over the lifetime of an accelerator. Plans have been made to use this type of magnet in the SuperHILAC prestripper. It is expected that installation of this type of magnet would increase transmission of the prestripper by up to a factor of two over present operation for the heaviest beams, such as uranium.

Acknowledgements

We wish to thank Curtis Cummings, Anthony Tammmer, and Wayne Oglesby for their aid in the design and construction of the hybrid drift tube quadrupole.

References

[1] K. Halbach, "Conceptual Design of a Permanent Quadrupole Magnet with Adjustable Strength", Nuclear Instruments and Methods, 206, 353 (1983).

[2] K. Halbach, B. Feinberg, M.I. Green, R. MacGill, J. Milburn, and J. Tanabe, "Hybrid Rare Earth Quadrupole Drift Tube Magnets", IEEE Trans. Nucl. Sci., NS-32, 3643 (1985).

[3] K. Halbach, "First Order Perturbation Effects in Iron-Dominated Two-Dimensional Symmetrical Multipoles", Nuclear Instruments and Methods, 74, 147 (1969).

This report was done with support from the Department of Energy. Any conclusions or opinions expressed in this report represent solely those of the author(s) and not necessarily those of The Regents of the University of California, the Lawrence Berkeley Laboratory or the Department of Energy.

Reference to a company or product name does not imply approval or recommendation of the product by the University of California or the U.S. Department of Energy to the exclusion of others that may be suitable.

LAWRENCE BERKELEY LABORATORY
TECHNICAL INFORMATION DEPARTMENT
UNIVERSITY OF CALIFORNIA
BERKELEY, CALIFORNIA 94720