LBL-22312
Preprint

Lawrence Berkeley Laboratory

UNIVERSITY OF CALIFORNIA

RECEIVED
BERKELEY LABORATORY
NOV 18 1986
LIBRARY AND
DOCUMENTS SECTION

Materials & Molecular Research Division

Submitted to Acta Crystallographica

BIS(CYCLOPENTADIENYL)DIBENZYLTHORIUM(IV)
[BIS(DIMETHYLDIPHOSPHINO)ETHANE]
$(C_5H_5)_2(CH_2C_6H_5)_2Th\cdot(CH_3)_2PCH_2CH_2P(CH_3)_2$

A. Zalkin, J.G. Brennan, and R.A. Andersen

September 1986

TWO-WEEK LOAN COPY
This is a Library Circulating Copy
which may be borrowed for two weeks.

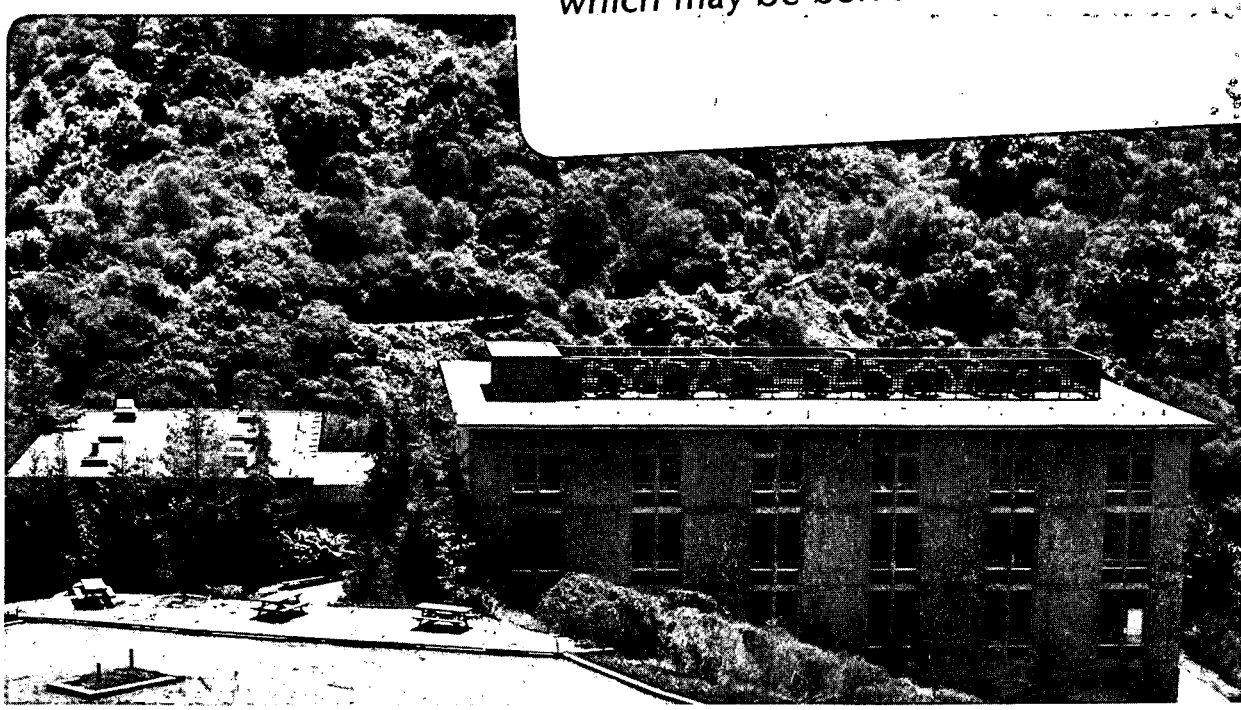

LBL-22312 c.2

Prepared for the U.S. Department of Energy under Contract DE-AC03-76SF00098

DISCLAIMER

This document was prepared as an account of work sponsored by the United States Government. While this document is believed to contain correct information, neither the United States Government nor any agency thereof, nor the Regents of the University of California, nor any of their employees, makes any warranty, express or implied, or assumes any legal responsibility for the accuracy, completeness, or usefulness of any information, apparatus, product, or process disclosed, or represents that its use would not infringe privately owned rights. Reference herein to any specific commercial product, process, or service by its trade name, trademark, manufacturer, or otherwise, does not necessarily constitute or imply its endorsement, recommendation, or favoring by the United States Government or any agency thereof, or the Regents of the University of California. The views and opinions of authors expressed herein do not necessarily state or reflect those of the United States Government or any agency thereof or the Regents of the University of California.

Bis(cyclopentadienyl)dibenzylthorium(IV)[bis(dimethyldiphosphino)ethane]

$$(C_5H_5)_2(CH_2C_6H_5)_2Th\cdot(CH_3)_2PCH_2CH_2P(CH_3)_2$$

By Allan Zalkin, John G. Brennan & Richard A. Andersen

Materials and Molecular Research Division, Lawrence Berkeley Laboratory and Department of Chemistry, University of California, Berkeley CA 94720

Abstract. $(C_5H_5)_2(CH_2C_6H_5)_2Th\cdot(CH_3)_2PCH_2CH_2P(CH_3)_2$, M_r= 694.64, triclinic, $P\bar{1}$, a = 13.104(4), b = 11.124(4), c = 10.518(4) Å, α = 89.90(3)°, β = 92.99(3)°, γ = 110.16(3)°, V = 1437.1 Å^3, Z = 2, D_x = 1.605 g cm^{-3}, λ(CuKα)=1.5418 Å, μ = 179.1 cm^{-1}, F(000) = 680, T = 296 K, R = 0.028 for 4021 unique reflections with $F^2 > \sigma(F^2)$ of 4279 total unique data. Distances (Å) are: ave Th-C(Cp) 2.83 ± 0.05; Th-C(benzyl) 2.648(6), 2.666(7); Th-P 3.142(2), 3.237(2); Th-Cp(ring) 2.56, 2.59. The cyclopentadienyl rings are <u>trans</u> to the bidentate ligand and is in agreement with Keppert's rules for six-coordinate complexes. There are no interactions between the Th atom and the aryl ring.

Introduction. In the preceding paper the X-ray crystal structure of $(C_5H_5)_2Th(X)_2\cdot(CH_3)_2PCH_2CH_2P(CH_3)_2$, where X is CH_3 or Cℓ were described and the geometry of the complexes was rationalized on the basis of Keppert's rules (Keppert, 1977). In our synthetic studies we prepared the benzyl analogue, $(C_5H_5)_2Th(CH_2C_6H_5)_2\cdot(CH_3)_2PCH_2CH_2(CH_3)_2$, the structure of which is of considerable interest since the benzylic group often behaves as an η^3- or η^4- benzylic ligand towards actinide centers, i.e., the ortho- and ipso-carbon to uranium distances are shorter than the sum of the van der Waals radii of the elements (Mintz, Moloy, Marks & Day, 1982; Edwards, Andersen & Zalkin, 1984).

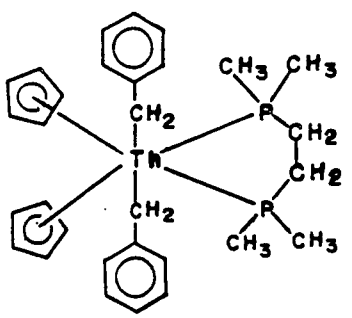

Experimental. The complex was made by the reaction of $(C_5H_5)_2C\ell_2Th\cdot(CH_3)_2PCH_2CH_2P(CH_3)_2$ with benzyllithium at -45°C (Brennan, 1985). Crystals suitable for the X-ray study were grown from a toluene:pentane (1:1) mixture at -70°C. Yellow air sensitive crystals were sealed inside quartz capillaries under argon. Crystal 0.18 x 0.19 x 0.25 mm with 6 faces; modified Picker automatic diffractometer, graphite monochromator; cell dimensions from 36 reflections, $40° < 2\theta < 80°$; analytical absorption correction, range 5.39 to 20.85; max. $(\sin\theta)/\lambda$ = 0.56 Å; h -13 to 13, k 0 to 12, ℓ -11 to 11; three standard reflections, average decay 5%, intensities adjusted accordingly; 6932 data, 4279 unique, R_{int}= 0.030; structure solved by Patterson and Fourier methods; refined on F, f' & f" terms included, 394 parameter; positional coordinates of all the hydrogen atoms were estimated and, with the exception of the 16

dimethylphosphinoethane hydrogen atoms, were refined in the least-squares refinements with isotropic thermal parameters; dimethylphosphinoethane hydrogen atom parameters included but not refined; anisotropic thermal parameters for non-hydrogen atoms; large anisotropies in the thermal parameters of C(27) & C(28) and a short C-C bond length suggests disorder in the dimethylphosphinoethane ligand; R = 0.031 for 4279 data; R = 0.028 for 4021 reflections for which $F^2 > \sigma(F^2)$; wR = 0.033; S = 1.3; $w = [\sigma(F)]^{-2}$, p = 0.045 in calc. of $\sigma(F^2)$; max (shift/σ) < 0.04; empirical extinction correction, $F_{corr} = (1 + kI)$, $k = 2.3\times10^{-7}$; max. and min. of ΔF synthesis 1.3 and -1.1 e Å; atomic f, f' & f" for neutral Th, Cℓ, P, and C, and spherical bonded H from International Tables (1974); local unpublished programs and ORTEP (Johnson, 1965).

Atomic parameters are listed in Table 1,* and distances and angles are listed in Table 2. Fig.1 shows the molecule and numbering scheme.

---

*Lists of structure factors, anisotropic thermal parameters, calculated hydrogen positions, distances and angles, and least-squares planes have been deposited with the British Library Lending Division as Supplementary Publication No. (33 pp.). Copies may be obtained through The Executive Secretary, International Union of Crystallography, 5 Abbey Square, Chester CH1 2HU, England.

Discussion. The stereochemistry of $(C_5H_5)_2(CH_2C_6H_5)_2Th\cdot PCH_2CH_2P(CH_3)_2$ is similar to that of the methyl and chloro analogues (Zalkin, Brennan & Andersen, 1986). This is expected on the bases of Keppert's rules (Keppert, 1977) since a Th-ring centroid distance of 2.57 Å is less than the averaged Th-C(benzyl) bond distance of 2.657 ± 0.005 Å, and the ligand with the

shortest metal ligand bond will prefer to occupy the site trans to the bidentate ligand. The averaged Th-C(benzyl) distance is longer than the equivalent Th-C(CH_3) distance in $(C_5H_5)_2(CH_3)_2Th{\cdot}PCH_2CH_2P(CH_3)_2$ of 2.573 ± 0.006 Å (Zalkin, Brennan & Andersen, 1986). This is consistent with previous structural results which show that the uranium or thorium benzyl bond length is ca. 0.1 Å longer than the equivalent metal-carbon (sp^3-hybridized) distance (Perego, Cesari, Farina & Lugli, 1976; Edwards, Andersen & Zalkin, 1984).

The two independent Th-P distances are significantly different, with an averaged distance of 3.19 ± 0.03 Å. The Th-P distance is substantially longer than that found in $(C_5H_5)_2C\ell_2Th{\cdot}(CH_3)_2PCH_2CH_2P(CH_3)_2$ of 3.122 ± 0.001 Å and in $(C_5H_5)_2(CH_3)_2Th{\cdot}(CH_3)_2PCH_2CH_2P(CH_3)_2$ of 3.147 ± 0.001 Å (Zalkin, Brennan & Andersen, 1986). In all three complexes the averaged Th-C(C_5H_5) distances are equal within experimental error. The long Th-P distances can be rationalized most easily as a steric effect since the benzyl group is larger than a methyl group which prevents the phosphine from getting closer to the thorium atom in the benzyl derivative..

The principal reason for doing the structure of the benzyl derivative was to examine the interaction, if any, between the actinide metal center and the aryl-ring carbon atoms. There are no thorium-carbon contacts shorter than 3.2 Å and the Th-C(18)-C(19), Th-C(11)-C(12) angles are normal. This is consistent with the explanation advanced previously (Edwards, Andersen & Zalkin, 1984) which suggested that the η^3- or η^4- benzylic interactions are relatively weak (on the order of solvation energies or crystal packing energies) and that they are a manifestation of the desire of the large, electropositive actinide metals to maximize their coordination numbers and to minimize the intramolecular ligand-ligand repulsions. The

molecular structure is a compromise between these two conflicting tendencies. In the molecule described here, the thorium atom is coordinatively saturated and no benzylic interactions are observed.

This work was supported by the Director, Office of Energy Research, Office of Basic Energy Sciences, Chemical Sciences Division of the U. S. Department of Energy under Contract No. DE-AC03-76SF00098.

References

Brennan, J. G. (1985). Ph. D. Thesis, University of California at Berkeley.

Edwards, P. G., Andersen, R. A., Zalkin, A. (1984). Organometallics, 3, 293-298.

International Tables for X-ray Crystallography (1974). Vol.IV; Table 2.2, pp 71-102. Birmingham: Kynoch Press.

Johnson, C. K. (1965). ORTEP. Report ORNL-3794. Oak Ridge National Laboratory, Tennessee.

Keppert, D. L. (1977) Progress in Inorganic Chemistry, 23, 1-65.

Mintz, E. A., Moloy, K. G., Marks, T. J. & Day, V. W. (1982). J. Am. Chem. Soc.,104, 4692-4695.

Perego, G., Cesari, M., Farina, F., & Lugli, G. (1976). Acta Cryst., B32, 3034-3039.

Zalkin, A., Brennan, J. G. & Andersen, R. A., (1986), Previous paper in this issue.

Table 1. Atomic Parameters

$$B_{eq} = \Sigma_i \Sigma_j B_{ij} a_i^* a_j^* a_i \cdot a_j / 3, \quad A^2.$$

Atom	x	y	z	B_{eq}/B
Th	0.17689(1)	0.35991(2)	0.23254(1)	3.436(6)
P(1)	0.26019(14)	0.13689(16)	0.31568(17)	5.00(5)
P(2)	0.18855(13)	0.31165(16)	0.53572(13)	4.56(5)
C(1)	0.0117(5)	0.4689(6)	0.2200(6)	4.6(2)
C(2)	0.0439(5)	0.4718(6)	0.3488(6)	4.4(2)
C(3)	0.1481(5)	0.5634(6)	0.3676(6)	4.8(2)
C(4)	0.1805(5)	0.6163(6)	0.2467(6)	4.7(2)
C(5)	0.0961(5)	0.5578(6)	0.1600(6)	4.9(2)
C(6)	0.1371(7)	0.2188(9)	-0.0065(7)	6.7(3)
C(7)	0.2450(8)	0.2391(10)	0.0235(7)	6.7(3)
C(8)	0.3046(8)	0.3665(11)	0.0181(7)	7.6(4)
C(9)	0.2328(11)	0.4303(10)	-0.0143(7)	8.3(4)
C(10)	0.1289(10)	0.3379(11)	-0.0288(7)	7.0(4)
C(11)	0.0053(6)	0.1506(7)	0.2696(8)	5.3(2)
C(12)	-0.1021(5)	0.1615(6)	0.2362(6)	4.7(2)
C(13)	-0.1457(6)	0.1491(7)	0.1096(7)	5.9(2)
C(14)	-0.2417(6)	0.1717(8)	0.0783(8)	6.5(3)
C(15)	-0.3002(6)	0.2020(8)	0.1692(9)	6.8(3)
C(16)	-0.2610(6)	0.2107(8)	0.2943(9)	6.4(3)
C(17)	-0.1651(5)	0.1902(7)	0.3268(7)	5.5(2)
C(18)	0.3814(5)	0.4691(7)	0.3201(7)	5.0(2)
C(19)	0.4275(5)	0.6076(6)	0.3027(7)	5.1(2)
C(20)	0.4234(5)	0.6947(7)	0.3966(7)	5.5(2)
C(21)	0.4600(6)	0.8293(8)	0.3768(10)	7.0(3)
C(22)	0.5042(7)	0.8734(9)	0.2649(12)	8.3(4)
C(23)	0.5122(8)	0.7922(10)	0.1708(11)	8.3(4)
C(24)	0.4761(7)	0.6620(8)	0.1916(9)	6.8(3)
C(25)	0.4034(7)	0.1612(9)	0.2979(9)	7.6(3)
C(26)	0.1955(8)	-0.0235(8)	0.2436(9)	7.8(3)
C(27)	0.2423(10)	0.0979(9)	0.4833(8)	8.5(4)
C(28)	0.2601(9)	0.1997(11)	0.5691(8)	8.7(4)

C(29)		0.0635(6)	0.2476(8)	0.6191(6)	6.7(3)
C(30)		0.2672(7)	0.4392(9)	0.6473(7)	7.7(3)
H(1)	C(1)	-0.058(5)	0.417(6)	0.179(6)	4.3(13)*
H(2)	C(2)	-0.002(5)	0.424(6)	0.408(6)	4.2(13)*
H(3)	C(3)	0.193(5)	0.589(6)	0.445(7)	5.7(16)*
H(4)	C(4)	0.259(5)	0.689(5)	0.230(5)	4.0(12)*
H(5)	C(5)	0.102(5)	0.586(6)	0.082(6)	4.4(13)*
H(6)	C(6)	0.068(7)	0.119(9)	0.003(8)	8.6(23)*
H(7)	C(7)	0.277(7)	0.163(9)	0.039(8)	8.7(22)*
H(8)	C(8)	0.400(7)	0.396(8)	0.043(8)	8.8(22)*
H(9)	C(9)	0.242(6)	0.533(8)	-0.037(7)	7.3(18)*
H(10)	C(10)	0.068(6)	0.341(7)	-0.052(7)	5.4(17)*
H(11)	C(13)	-0.104(5)	0.132(6)	0.035(7)	5.6(15)*
H(12)	C(14)	-0.266(6)	0.167(7)	-0.002(7)	6.4(18)*
H(13)	C(15)	-0.378(7)	0.237(8)	0.132(8)	8.7(22)*
H(14)	C(16)	-0.297(6)	0.228(7)	0.348(7)	5.6(18)*
H(15)	C(17)	-0.131(6)	0.206(7)	0.411(7)	5.8(16)*
H(16)	C(20)	0.392(7)	0.660(9)	0.495(9)	9.2(23)*
H(17)	C(21)	0.448(7)	0.891(9)	0.460(9)	9.0(24)*
H(18)	C(22)	0.551(4)	0.982(5)	0.284(5)	3.6(11)*
H(19)	C(23)	0.552(8)	0.845(9)	0.110(9)	9.5(26)*
H(20)	C(24)	0.489(6)	0.607(7)	0.118(7)	6.7(18)*
H(37)	C(11)	0.022(6)	0.087(7)	0.218(7)	6.0(16)*
H(38)	C(11)	0.019(5)	0.144(6)	0.343(7)	4.7(15)*
H(39)	C(18)	0.398(5)	0.450(6)	0.394(6)	4.2(14)*
H(40)	C(18)	0.429(6)	0.431(7)	0.282(7)	7.1(19)*

* Atoms refined isotropically.

Table 2. Selected distances(Å) and angles(°)

Th	- C(1)	2.820(6)	Th	- C(10)	2.780(7)
Th	- C(2)	2.794(6)	Th	- C(11)	2.666(7)
Th	- C(3)	2.818(6)	Th	- C(18)	2.648(6)
Th	- C(4)	2.841(6)	Th	- Cp(1)	2.561
Th	- C(5)	2.841(6)	Th	- Cp(1)	2.591
Th	- C(6)	2.893(7)	Th	- P(1)	3.142(2)
Th	- C(7)	2.912(7)	Th	- P(2)	3.237(2)
Th	- C(8)	2.864(7)	P(2)	- P(1)	3.394(4)
Th	- C(9)	2.772(7)			

P(1)	-Th -P(2)	64.26(5)	Th	-C(11)-C(12)	115.5(5)
P(1)	-Th -C(11)	71.26(17)	Th	-C(18)-C(19)	108.0(3)
P(1)	-Th -C(18)	73.39(16)	Th	-P(1) -C(25)	117.53(30)
P(2)	-Th -C(11)	75.13(17)	Th	-P(1) -C(26)	119.80(30)
P(2)	-Th -C(18)	71.77(17)	Th	-P(1) -C(27)	112.88(28)
C(11)	-Th -C(18)	139.30(23)	C(25)	-P(1) -C(26)	100.9(4)
Cp(1)	-Th -Cp(2)	115.9	C(25)	-P(1) -C(27)	103.2(5)
Cp(1)	-Th -C(11)	100.9	C(26)	-P(1) -C(27)	99.8(4)
Cp(1)	-Th -C(18)	102.6	Th	-P(2) -C(28)	109.85(27)
Cp(1)	-Th -P(1)	154.9	Th	-P(2) -C(29)	119.79(24)
Cp(1)	-Th -P(2)	90.8	Th	-P(2) -C(30)	121.45(27)
Cp(2)	-Th -C(11)	99.6	C(28)	-P(2) -C(29)	104.5(4)
Cp(2)	-Th -C(18)	99.3	C(28)	-P(2) -C(29)	98.4(5)
Cp(2)	-Th -P(1)	89.1	C(29)	-P(2) -C(30)	99.8(4)
Cp(2)	-Th -P(2)	153.2			

[a] Cp(1) and Cp(2) represent the centroids of cyclopentadienyl atoms C(1)-C(5) and C(6)-C10) respectively.

Fig.1. ORTEP (Johnson, 1965) of $(C_5H_5)_2(CH_2C_5H_5)_2Th\cdot(CH_3)_2PCH_2CH_2P(CH_3)_2$ showing the atomic numbering scheme; 50% probability ellipsoids.

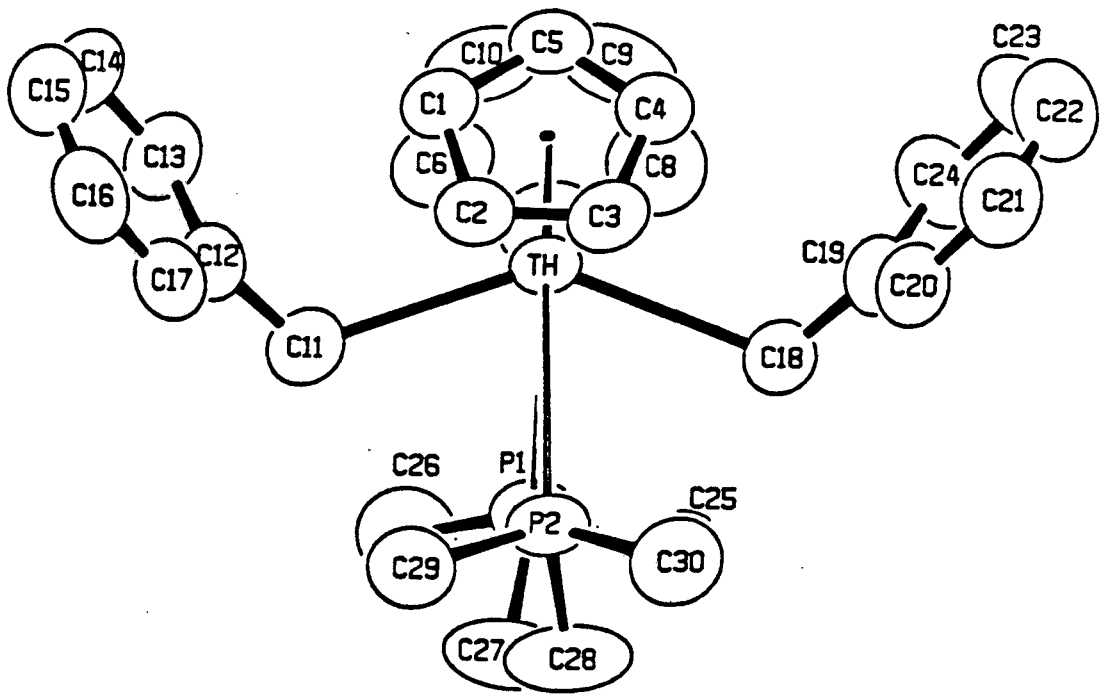

Supplemental Material

for

Bis(cyclopentadienyl)dibenzylthorium(IV)[bis(dimethyldiphosphino)ethane]

$(C_5H_5)_2(CH_2C_6H_5)_2Th\cdot(CH_3)_2PCH_2CH_2P(CH_3)_2$

By Allan Zalkin, John G. Brennan & Richard A. Anderersen

Materials and Molecular Research Division, Lawrence Berkeley Laboratory and

Department of Chemistry, University of California, Berkeley CA 94720

Abstract. $(C_5H_5)_2(CH_2C_6H_5)_2Th\cdot(CH_3)_2PCH_2CH_2P(CH_3)_2$, M_r= 694.64, triclinic, $P\bar{1}$, a = 13.104(4), b = 11.124(4), c = 10.518(4) A, α = 89.90(3)°, β = 92.99(3)°, γ = 110.16(3)°, V = 1437.1 A^3, Z = 2, D_x = 1.605 g cm^{-3}, λ(CuKα)=1.5418 A, μ = 179.1 cm^{-1}, F(000) = 680, T = 296 K, R = 0.028 for 4021 unique reflections with $F^2 > \sigma(F^2)$ of 4279 total unique data. Distances (A) are: ave Th-C(Cp) 2.83 ± 0.05; Th-C(benzyl) 2.648(6), 2.666(7); Th-P 3.142(2), 3.237(2); Th-Cp(ring) 2.56, 2.59. The cyclopentadienyl rings are <u>trans</u> to the bidentate ligand and is in agreement with Keppert's rules for six-coordinate complexes. There are no interactions between the Th atom and the aryl ring.

Supplemental Table 1. Anisotropic Thermal Parameters (A^2)[a]

$(C_5H_5)_2(CH_2C_6H_5)_2Th\cdot(CH_3)_2PCH_2CH_2P(CH_3)_2$

Atom	B_{11}	B_{22}	B_{33}	B_{12}	B_{13}	B_{23}
Th	4.082(9)	4.317(10)	2.405(9)	2.045(6)	0.449(6)	0.096(6)
P(1)	6.20(8)	4.93(7)	4.77(7)	3.06(6)	0.33(6)	0.06(6)
P(2)	5.64(7)	5.91(8)	2.66(5)	2.64(6)	0.26(5)	0.38(5)
C(1)	4.55(25)	5.14(28)	4.61(28)	2.49(22)	0.09(22)	0.02(23)
C(2)	5.03(26)	4.99(28)	3.82(26)	2.62(22)	0.84(22)	0.22(22)
C(3)	5.58(29)	5.3(3)	4.10(28)	2.65(24)	-0.35(24)	-0.74(23)
C(4)	4.88(27)	4.50(27)	5.4(3)	2.42(22)	0.48(24)	0.32(23)
C(5)	5.41(29)	5.7(3)	4.18(29)	2.73(24)	0.40(24)	0.96(24)
C(6)	8.4(5)	8.9(5)	3.7(3)	4.3(4)	0.2(3)	-1.8(3)
C(7)	8.8(5)	9.1(5)	4.2(3)	5.3(5)	1.6(3)	-0.7(3)
C(8)	8.2(5)	10.6(7)	4.3(3)	3.2(5)	2.7(3)	-0.6(4)
C(9)	13.8(8)	8.7(6)	3.5(3)	4.9(6)	3.9(4)	1.8(3)
C(10)	10.0(6)	10.5(6)	2.85(27)	6.5(5)	0.2(3)	-0.7(3)
C(11)	5.3(3)	6.1(4)	4.4(3)	1.92(26)	-0.24(26)	-0.45(28)
C(12)	4.45(25)	4.24(26)	4.79(29)	0.66(20)	0.32(22)	-0.18(22)
C(13)	5.1(3)	6.9(4)	5.2(3)	1.70(27)	-0.19(26)	-0.96(29)
C(14)	5.5(3)	7.3(4)	6.2(4)	1.57(29)	-1.2(3)	-0.5(3)
C(15)	4.9(3)	7.0(4)	8.1(5)	1.73(28)	0.4(3)	0.4(4)
C(16)	5.4(3)	5.8(4)	7.9(5)	1.41(28)	2.2(4)	0.3(3)
C(17)	5.0(3)	5.6(3)	5.0(3)	0.74(24)	1.03(26)	0.51(26)
C(18)	4.32(26)	5.7(3)	4.9(3)	1.79(23)	0.31(24)	0.25(27)
C(19)	3.37(22)	5.5(3)	6.4(4)	1.37(21)	0.39(23)	0.30(27)
C(20)	4.76(27)	5.6(3)	5.9(4)	1.44(24)	0.02(25)	-0.59(28)
C(21)	5.8(4)	6.5(4)	8.5(5)	1.9(3)	-0.1(4)	-0.4(4)
C(22)	6.0(4)	6.6(5)	12.7(8)	2.5(3)	1.4(4)	1.0(5)
C(23)	7.2(4)	7.7(5)	10.4(7)	2.7(4)	3.3(5)	4.0(5)
C(24)	6.5(4)	6.4(4)	7.8(5)	2.2(3)	2.8(4)	1.2(4)
C(25)	6.7(4)	8.3(5)	9.3(6)	4.5(4)	-0.4(4)	0.3(4)
C(26)	9.3(5)	6.3(4)	8.5(5)	3.5(4)	0.3(4)	-0.8(4)
C(27)	14.7(8)	7.5(5)	5.7(4)	6.9(5)	0.8(5)	1.3(4)
C(28)	12.2(7)	12.0(7)	4.7(4)	7.8(6)	1.0(4)	2.4(4)
C(29)	7.1(4)	8.6(5)	3.72(29)	1.7(3)	0.83(27)	0.88(29)
C(30)	8.2(5)	10.3(6)	3.16(28)	1.5(4)	-0.02(29)	0.0(3)

[a] The anisotropic temperature factor has the form:

$$\exp[-0.25(B_{11}h^2a^{*2} + 2B_{12}hka^*b^* + \cdots].$$

Supplemental Table 2. Estimated Hydrogen Positional and Isotropic Thermal Parameters (A^2)[a] $(C_5H_5)_2(CH_2C_6H_5)_2Th\cdot(CH_3)_2PCH_2CH_2P(CH_3)_2$

Atom	x	y	z	B
H21 C25	0.4162	0.1567	0.2075	8.0
H22 C25	0.4222	0.0940	0.3435	8.0
H23 C25	0.4480	0.2451	0.3334	8.0
H24 C26	0.2209	-0.0846	0.2909	8.0
H25 C26	0.2149	-0.0220	0.1549	8.0
H26 C26	0.1163	-0.0488	0.2470	8.0
H27 C27	0.2934	0.0542	0.5090	8.0
H28 C27	0.1676	0.0396	0.4906	8.0
H29 C28	0.2384	0.1622	0.6522	8.0
H30 C28	0.3380	0.2487	0.5735	8.0
H31 C29	0.0814	0.2438	0.7103	8.0
H32 C29	0.0219	0.1613	0.5861	8.0
H33 C29	0.0202	0.3032	0.6058	8.0
H34 C30	0.3438	0.4698	0.6259	8.0
H35 C30	0.2613	0.4060	0.7340	8.0
H36 C30	0.2389	0.5099	0.6418	8.0

[a] The isotropic temperature factor has the form $\exp[-B(\sin\theta/\lambda)^2]$.

Supplemental Table 3. Additional Distances(A)

P(1) - C(25)	1.821(8)	C(6) - C(7)	1.372(12)	C(16)- C(17)	1.379(11)
P(1) - C(26)	1.836(9)	C(6) - C(10)	1.384(12)	C(18)- C(19)	1.464(10)
P(1) - C(27)	1.823(9)	C(7) - C(8)	1.364(13)	C(19)- C(20)	1.401(10)
P(2) - C(28)	1.823(9)	C(8) - C(9)	1.390(14)	C(19)- C(24)	1.395(11)
P(2) - C(29)	1.818(8)	C(9) - C(10)	1.396(14)	C(20)- C(21)	1.426(11)
P(2) - C(30)	1.823(8)	C(11)- C(12)	1.479(9)	C(21)- C(22)	1.355(13)
C(1) - C(2)	1.394(8)	C(12)- C(13)	1.409(9)	C(22)- C(23)	1.373(14)
C(1) - C(5)	1.385(9)	C(12)- C(17)	1.398(9)	C(23)- C(24)	1.381(12)
C(2) - C(3)	1.398(9)	C(13)- C(14)	1.389(11)	C(27)- C(28)	1.396(13)
C(3) - C(4)	1.424(9)	C(14)- C(15)	1.367(11)		
C(4) - C(5)	1.371(9)	C(15)- C(16)	1.379(12)		
H(1) - C(1)	0.97(6)	H(15)- C(17)	0.96(7)	H(29)- C(28)	0.981
H(2) - C(2)	0.92(6)	H(16)- C(20)	1.15(9)	H(30)- C(28)	0.977
H(3) - C(3)	0.97(7)	H(17)- C(21)	1.16(9)	H(31)- C(29)	0.980
H(4) - C(4)	1.09(6)	H(18)- C(22)	1.17(5)	H(32)- C(29)	0.979
H(5) - C(5)	0.88(6)	H(19)- C(23)	0.92(10)	H(33)- C(29)	0.979
H(6) - C(6)	1.17(9)	H(20)- C(24)	1.04(8)	H(34)- C(30)	0.980
H(7) - C(7)	1.08(9)	H(21)- C(25)	0.979	H(35)- C(30)	0.980
H(8) - C(8)	1.20(8)	H(22)- C(25)	0.980	H(36)- C(30)	0.979
H(9) - C(9)	1.13(8)	H(23)- C(25)	0.978	H(37)- C(11)	0.98(7)
H(10)- C(10)	0.84(7)	H(24)- C(26)	0.979	H(38)- C(11)	0.80(7)
H(11)- C(13)	1.03(7)	H(25)- C(26)	0.979	H(39)- C(18)	0.84(6)
H(12)- C(14)	0.88(7)	H(26)- C(26)	0.979	H(40)- C(18)	0.97(8)
H(13)- C(15)	1.25(9)	H(27)- C(27)	0.977		
H(14)- C(16)	0.82(7)	H(28)- C(27)	0.981		

Supplemental Table 4. Additional Angles (°)

$(C_5H_5)_2(C_6H_5CH_2)_2Th\cdot(CH_3)_2PCH_2CH_2P(CH_3)_2$

C(2) -C(1) - C(5)	107.3(6)	C(16)-C(17)- C(12)	122.4(7)
C(1) -C(2) - C(3)	108.5(6)	C(18)-C(19)- C(20)	121.7(7)
C(2) -C(3) - C(4)	107.1(6)	C(19)-C(20)- C(21)	122.2(8)
C(3) -C(4) - C(5)	107.1(6)	C(20)-C(21)- C(22)	118.1(9)
C(1) -C(5) - C(4)	110.0(6)	C(21)-C(22)- C(23)	121.9(9)
C(7) -C(6) - C(10)	106.7(9)	C(22)-C(23)- C(24)	119.2(9)
C(6) -C(7) - C(8)	110.2(9)	C(23)-C(24)- C(19)	123.0(9)
C(7) -C(8) - C(9)	107.5(9)	C(25)-P(1) - C(26)	100.9(4)
C(8) -C(9) - C(10)	107.1(9)	C(25)-P(1) - C(27)	103.2(5)
C(6) -C(10)- C(9)	108.5(9)	C(26)-P(1) - C(27)	99.8(4)
C(11)-C(12)- C(13)	122.0(6)	P(1) -C(27)- C(28)	117.2(7)
C(12)-C(13)- C(14)	121.2(7)	P(2) -C(28)- C(27)	117.9(7)
C(13)-C(14)- C(15)	121.7(8)	C(28)-P(2) - C(29)	104.5(4)
C(14)-C(15)- C(16)	118.2(8)	C(28)-P(2) - C(30)	98.4(5)
C(15)-C(16)- C(17)	120.9(8)	C(29)-P(2) - C(30)	99.8(4)

Supplemental Table 5. Least-squares Planes

$(C_5H_5)_2(C_6H_5CH_2)_2Th\cdot(CH_3)_2PCH_2CH_2P(CH_3)_2$

Plane No. 1

Equation of plane: -9.06725 a + 9.98514 b + 2.01472 c = 5.01869

Distance to the plane from atoms

in the plane			not in the plane	
atom	d(A)	σ(d)	atom	d(A)
C(1)	0.0003	(84)	Th	-2.560(3)
C(2)	-0.0028	(85)		
C(3)	0.0047	(90)		
C(4)	-0.0040	(85)		
C(5)	0.0027	(90)		

Plane No. 2

Equation of plane: -3.09051 a + 1.80119 b + 10.27967 c = -0.09098

Distance to the plane from atoms

in the plane			not in the plane	
atom	d(A)	σ(d)	atom	d(A)
C(6)	-0.0051	(134)	Th	2.583(6)
C(7)	0.0056	(138)		
C(8)	-0.0042	(155)		
C(9)	-0.0004	(177)		
C(10)	0.0047	(158)		

Plane No. 3

Equation of plane: 2.47001 a + 9.45745 b - 1.52736 c = 0.90153

Distance to the plane from atoms

in the plane			not in the plane	
atom	d(A)	σ(d)	atom	d(A)
C(12)	0.0132	(82)	C(11)	0.124(12)
C(13)	-0.0185	(101)		
C(14)	0.0052	(110)		
C(15)	0.0086	(115)		
C(16)	-0.0034	(116)		
C(17)	-0.0100	(143)		

Plane No. 4

Equation of plane: 12.05589 a - 2.93038 b - 3.556452c = 4.46499

Distance to the plane from atoms

in the plane			not in the plane	
atom	d(A)	σ(d)	atom	d(A)
C(19)	-0.0156	(94)	C(18)	-0.102(13)
C(20)	0.0141	(96)		
C(21)	-0.0100	(125)		
C(22)	-0.0033	(148)		
C(23)	-0.0034	(143)		
C(24)	-0.0160	(116)		

Supplemental Fig. 1. ORTEP drawing of molecule viewed 90 degrees from Orientation in Figure 1 (main text).

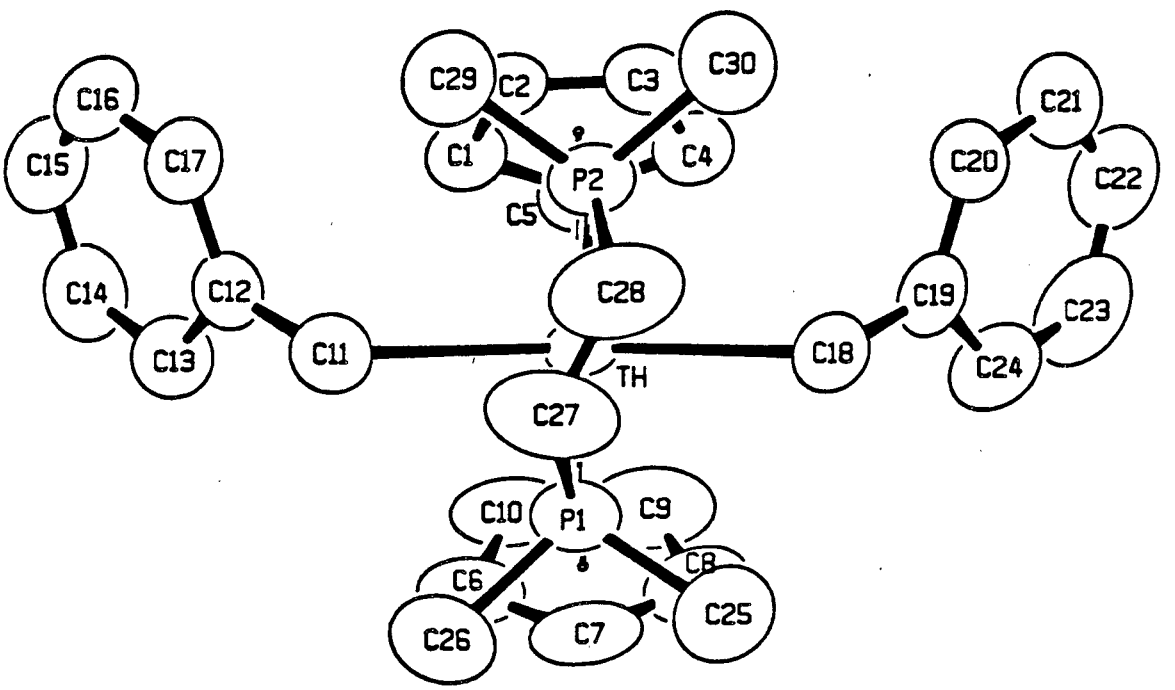

This report was done with support from the Department of Energy. Any conclusions or opinions expressed in this report represent solely those of the author(s) and not necessarily those of The Regents of the University of California, the Lawrence Berkeley Laboratory or the Department of Energy.

Reference to a company or product name does not imply approval or recommendation of the product by the University of California or the U.S. Department of Energy to the exclusion of others that may be suitable.

LAWRENCE BERKELEY LABORATORY
TECHNICAL INFORMATION DEPARTMENT
UNIVERSITY OF CALIFORNIA
BERKELEY, CALIFORNIA 94720