LBL-22662
UC-94c

Lawrence Berkeley Laboratory
UNIVERSITY OF CALIFORNIA

APPLIED SCIENCE DIVISION

RECEIVED
LAWRENCE
BERKELEY LABORATORY

APR 22 1987

LIBRARY AND
DOCUMENTS SECTION

ZINC/AIR BATTERY R & D
ZINC/AIR ENGINEERING ANALYSIS
FOR ELECTRICAL VEHICLES
TASKS III. Final Report

M. Klein and S. Viswanathan

December 1986

TWO-WEEK LOAN COPY

This is a Library Circulating Copy which may be borrowed for two weeks.

APPLIED SCIENCE DIVISION

LBL-22662 c.2

Prepared for the U.S. Department of Energy under Contract DE-AC03-76SF00098

DISCLAIMER

This document was prepared as an account of work sponsored by the United States Government. While this document is believed to contain correct information, neither the United States Government nor any agency thereof, nor the Regents of the University of California, nor any of their employees, makes any warranty, express or implied, or assumes any legal responsibility for the accuracy, completeness, or usefulness of any information, apparatus, product, or process disclosed, or represents that its use would not infringe privately owned rights. Reference herein to any specific commercial product, process, or service by its trade name, trademark, manufacturer, or otherwise, does not necessarily constitute or imply its endorsement, recommendation, or favoring by the United States Government or any agency thereof, or the Regents of the University of California. The views and opinions of authors expressed herein do not necessarily state or reflect those of the United States Government or any agency thereof or the Regents of the University of California.

LBL-22662

ZINC/AIR BATTERY R & D
ZINC/AIR ENGINEERING ANALYSIS FOR ELECTRIC VEHICLES
TASK III

Final Report

December 1986

by

M. Klein and S. Viswanathan

Energy Research Corporation
3 Great Pasture Road
Danbury, Connecticut 06810

for

Technology Base Research Project
Lawrence Berkeley Laboratory
University of California
Berkeley, California 94720

This work was supported by the Assistant Secretary for Conservation and Renewable Energy, Office of Energy Storage and Distribution of the U.S. Department of Energy under Contract No. DE-AC03-76SF00098, Subcontract No. 4528010 with the Lawrence Berkeley Laboratory.

ABSTRACT

This report is an examination and analysis of the zinc-air system as the motive power source for electric vehicle propulsion. Various versions of the zinc-air system and operating schemes along with their advantages and disadvantages are discussed. Baseline cost calculations are also presented in order to compare the cost effectiveness of each of the systems.

The treatise is conceptual in nature and is not based on new experimental work. The information is based on published literature and investigations carried out at ERC in the past.

The study also includes recommendations and suggestions in areas that require further research and development work to achieve a smooth transition from the conceptual stage to a practical, viable, and cost effective system.

TABLE OF CONTENTS

	EXECUTIVE SUMMARY	E-1
1.0	INTRODUCTION	1
2.0	POWER REQUIREMENTS	3
3.0	ZINC-AIR SYSTEM: HISTORY AND BACKGROUND	7
4.0	ZINC-AIR ELECTROCHEMISTRY	8
5.0	ZINC-AIR SYSTEMS	11
5.1	INTRODUCTION	11
5.2	MECHANICALLY REFUELABLE SYSTEM	13
5.3	ELECTRICALLY RECHARGEABLE	15
5.4	CIRCULATING ELECTROLYTE	17
5.5	CIRCULATING ZINC SLURRY	19
6.0	SYSTEMS ANALYSIS	22
6.1	SYSTEM CONSIDERATIONS	22
6.1.1	Effect of Temperature	22
6.1.2	Storage Life	22
6.2	SYSTEM DESIGN	24
6.2.1	Refuelable Battery	24
6.2.2	Electrically Rechargeable System	30
6.2.2.1	Open Air System	32
6.2.2.2	Sealed O_2 System	38
6.2.3	Circulating System	42
6.2.3.1	Circulating Electrolyte System	42
6.2.3.2	Circulating Slurry System	46
7.0	PERFORMANCE PROJECTIONS FOR ZINC-AIR BATTERIES	52
7.1	SPECIFIC AREAS OF IMPROVEMENT	52
7.2	COSTS FOR ZINC-AIR	55
8.0	ZINC-OXYGEN(AIR)-ERC's CHOICE FOR A LONG-RANGE EV BATTERY	60
9.0	SUMMARY AND CONCLUSIONS	63

TABLE OF FIGURES

Figure No.		Page No.
1	SPECIFIC ENERGY AND MAXIMUM SPECIFIC POWER REQUIRED FOR 50 MILES OF CONTINUOUS DRIVING (LINE), 50 MILES OF SUBURBAN DRIVING (A), AND 50 MILE OF URBAN DRIVING (B)	4
2	OPERATING SCHEMES OF A ZINC-AIR BATTERY	12
3	SCHEMATIC FOR CIRCULATING ELECTROLYTE	18
4	SCHEMATIC FOR CIRCULATING SLURRY	21
5	SYSTEM PROBLEMS	23
6	WEIGHT ANALYSIS	41
7	OPERATING SCHEME - CIRCULATING ELECTROLYTE	43
8	OPERATING SCHEME - CIRCULATING SLURRY	48
9	ZINC-AIR BATTERY SYSTEM IN A DELIVERY VAN	59

LIST OF TABLES

Table No.		
1	POWER & ENERGY REQUIREMENTS	5
2	ENERGY DENSITIES OF VARIOUS SOURCES	6
3	CHARACTERISTICS OF METAL-AIR CELLS	9
4	OPERATING SCHEMES	11
5	MATERIAL COST	28
6	MATERIAL COST BREAKDOWN Zn-AIR REFUELABLE SYSTEM	29
7	SYSTEM COMPARISON-OPEN AIR VS. SEALED OXYGEN-	40
8	PERFORMANCE PROJECTIONS OF ZINC-AIR BATTERIES COMPARED TO OTHER ADVANCED BATTERIES FOR EV's	53
9	VOLUME PRODUCTION PRICE ESTIMATES FOR Zn-O_2 AND Zn-AIR BATTERIES	56
10	CANDIDATE ELECTRIC VEHICLE BATTERIES	57
11	SYSTEM COMPARISON	58
12	SYSTEM PARAMETERS	61

EXECUTIVE SUMMARY

This report examines the applicability of the zinc-air battery system as one of the potential candidates to power the electric vehicle.

The distinguishing feature of the zinc-air system is its flexibility; in addition to the conventional method of classical recharging, options such as mechanically refuelable and circulating systems are available. The report examines many possible alternatives and compares the performance, cost, convenience and complexity of each of the schemes.

The following zinc-air battery systems are examined in this analysis:

- Mechanically Refuelable
- Electrically Rechargeable
- Circulating Electrolyte
- Circulating Slurry

In addition, where applicable, alternate methods of operation are given. For example, the electrically rechargeable system can operate either as an open air or a sealed oxygen system and the circulating slurry system can be designed with on-board electrolysis or regeneration can be done externally.

Several possible operating schemes of the zinc-air system are analyzed and the advantages and disadvantages of each of the schemes are discussed. Assuming a vehicle weight of 2000 lb, the

material requirements, weight of battery and cost comparisons are calculated. It must be recognized that the cost calculations are empirical in nature and based on certain assumptions with the objective of comparing the cost effectiveness of the different schemes; accordingly the cost figures are not to be construed as actual values for a practical operating system.

Critical parameters such as weight, energy, cost and range of the different systems are compared on the basis of constant weight, constant cost and constant energy.

Finally, this analysis also includes performance projections and identifies specific areas of development efforts that will be required in order to transform zinc-air batteries for EV propulsion from the conceptual to a practical and cost-effective operating phase.

1.0 INTRODUCTION

In terms of national air pollution, the automobile is the greatest single contributor, by weight. The contribution to pollution annually from 90 million vehicles is in the order of:

Carbon monoxide	66,000,000	tons
Oxides of nitrogen	6,000,000	"
Hydrocarbons	12,000,000	"
Lead	190,000	"
Sulphur oxides	1,000,000	"
Particulates	1,000,000	"

In order to combat these massive amounts of harmful pollution, it is imperative that new types of automotive vehicles operate without generating harmful emissions. One of the logical approaches is the development of the electric automobile.

Various battery systems have been considered for light trucks and passenger vehicles and many prototypes have been developed. Despite this positive beginning, acceptance of electric vehicles for transportation have been hindered by the lack of a high energy density, safe and cost effective battery system to power the vehicle. In addition, the research and development efforts need to be directed not only at the power source but also at other components such as motors, controllers and chargers.

The laboratory improvements in the energy densities of batteries that have resulted in the recent years have rekindled the

interest in electric vehicles. As opposed to the earlier version of a converted gasoline-powered car, an "ideal" electric vehicle should eliminate all components that are not specifically required, reduce weights of other components and locate a greater share of weight distribution to the motor, batteries and essential electrical equipment.

Several battery systems have been examined in detail as the power source for the electric vehicles. This report is restricted to the analysis and review of the zinc-air(oxygen) battery, and examines the applicability, merits and problems associated with the system.

2.0 POWER REQUIREMENTS

Two essential parameters are needed to evaluate the characteristics of a power source, power and energy. In reference to an electric vehicle, power is related to the ability to accelerate, cruise at an acceptable speed and climb grades. In practice, the requirements are usually referred to as specific power (watts/lb) and specific energy (watt hours/lb).

Figure 1 shows the relationship between specific power and specific energy for a 2000 lb compact car for different modes of steady driving. This indicates that in order to drive at a steady speed of 40 mph for 100 miles on a level road, the power source of the vehicle should be capable of delivering 13.4 watts/lb and 33.6 watt hrs/lb.

However, vehicles are seldom driven in this manner. To be realistic, a "normal" driving pattern should take into account starts, acceleration, cruising, deceleration, idle and stops. It is obvious that start and stop city driving consumes considerably more energy and requires more power than driving at steady speeds up to 50 mph. Points A and B in Figure 1 represent the requirements of peak specific power and specific energy for 50 miles of city and suburban driving respectively. Therefore, the design of a suitable battery system should consider the dependency of the efficiency of the power plant with the power level.

The requirments of power and energy for driving a 2000 lb car using a 500 lb motive power source are shown in Table 1.

It is apparent that for a vehicle to operate without external inputs, a source of energy must be carried on board.

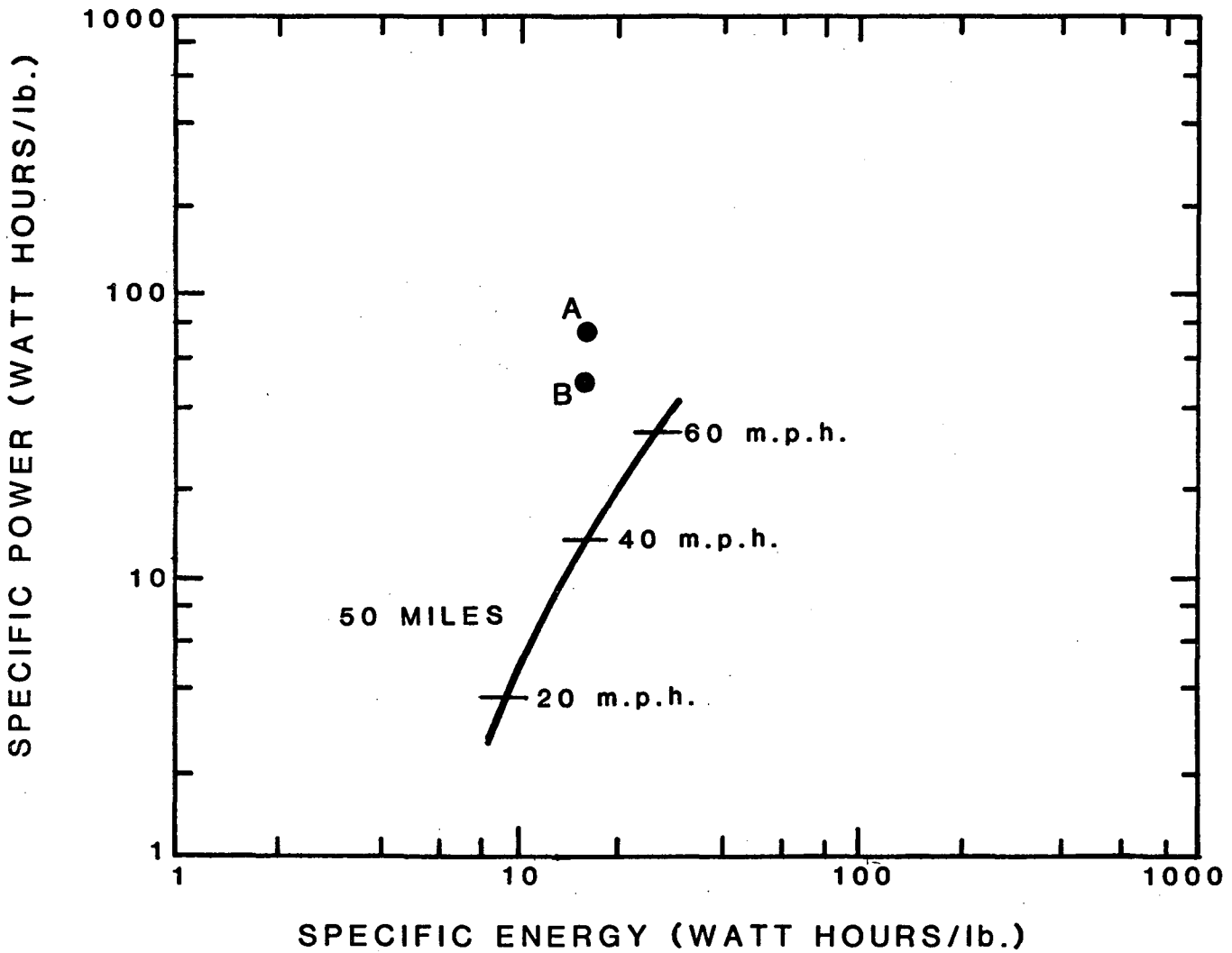

FIGURE 1- SPECIFIC ENERGY AND MAXIMUM SPECIFIC POWER REQUIRED FOR 50 MILES OF CONTINUOUS DRIVING (LINE), 50 MILES OF SUBURBAN DRIVING (A), AND 50 MILES OF URBAN DRIVING (B).

TABLE 1

POWER & ENERGY REQUIREMENTS

	CYCLE	
	URBAN	SUBURBAN
Maximum Power (kW)	22.1	40.0
Energy/Mile (whr/mile)	234	242
Maximum Specific Power (W/lb)	44.2	80
Specific Energy (whr/lb	23.4	24.2

Since a considerable quantity of energy would be consumed for a journey of reasonable distance, say, 40 kWh per 100 miles, the source must have sufficiently high specific energies, and energy densities.

As can be seen from the values of energy densities of various storage systems shown in Table 2, the chemical sources of energy are the most attractive means of storing energy in a vehicle. However, problems of future availability and pollution mandate the search for alternate sources.

TABLE 2

ENERGY DENSITIES OF VARIOUS SOURCES

SYSTEM	kWh/ft³ LOW	HIGH
Electrostatic		.0045
Magnetic	.0007	.06
Gravitational	.006	.15
Mechanical	.0007	.6
Phase Change	.007	75
Primary Battery	.15	7.5
Secondary Battery	.45	1.5
Fuel Cell	.75	75
Fuel (gasoline)		300

3.0 ZINC-AIR SYSTEM: HISTORY AND BACKGROUND

Early in the 19th century oxygen in atmospheric air was first observed to have depolarizing properties in electrochemical systems. This was confirmed in 1878 by replacing the manganese dioxide in the Leclanche cell by a porous air electrode containing platinized carbon, which, in turn led to the first commercial zinc-air battery in 1932, developed by Heise and Schumacher.

Advances in fuel cell research for space programs led to the development of oxygen electrodes containing fluorocarbons of high hydrophobicity and gas porosity. Using PTFE, it was possible to manufacture thin, composite air electrodes on a large scale. Continued research efforts resulted in developing electrodes which were high in performance, low in polarization, and mechanically strong. In addition, the amount of noble metal required to achieve satisfactory performance has been reduced by a factor of 20 since the late 1960's.

Early applications of the zinc-air system were for power packs for manpack radios. The first commercial use was the manufacture of button cells and the interest in its applicability for electric vehicles has been waning and waxing over the past twenty years.

4.0 ZINC-AIR ELECTROCHEMISTRY

The zinc-oxygen electrochemical system consists of a porous zinc anode, an air cathode and an electrolyte of potassium hydroxide of 25-40% in concentration. The air cathode, which is non-consumable, merely provides the reaction sites. The cell capacity is directly proportional to the quantity of zinc. Theoretically, the life of the air cathode is infinite and it catalytically promotes the reaction of oxygen with an aqueous alkaline electrolyte. Its unique feature of compactness combined with an unlimited capacity, makes very high energy densities achievable by providing increased volume to accommodate the zinc anode.

The overall cell reactions can be simplified as follows:

			E_o
CATHODE	$1/2\ O_2 + H_2O + 2e$	$\rightarrow\rightarrow\rightarrow\rightarrow\ 2\ OH^-$	0.40 V
ANODE	Zn	$\rightarrow\rightarrow\rightarrow\rightarrow\ Zn^{++} + 2e$	
	$Zn^{++} + 2\ HO^-$	$\rightarrow\rightarrow\rightarrow\rightarrow\ Zn(OH)_2$	1.25 V
	$Zn(OH)_2$	$\rightarrow\rightarrow\rightarrow\rightarrow\ ZnO + H_2O$	
OVERALL	$Zn + 1/2\ O_2$	$\rightarrow\rightarrow\rightarrow\rightarrow$	1.65 V

The choice of zinc as anode is due to the fact that it is the most electropositive metal that can be electroplated from aqueous solutions. The parameters of zinc are compared to other elements in Table 3.

TABLE 3

CHARACTERISTICS OF METAL-AIR CELLS

ELEMENT	ECE Ah/gm	CELL V	VALENCY CHANGE	SPECIFIC ENERGY wh/g	OPERATING VOLTAGE
Li	3.86	3.4	1	13.0	2.4
Ca	1.34	3.4	2	4.6	2.0
Mg	2.20	3.1	2	6.8	1.4
Al	2.98	2.7	3	8.1	1.6
Zn	0.82	1.6	2	1.3	1.2
Fe	0.96	1.3	2	1.2	1.0

Considerable amount of work has been done in the last couple of decades on the zinc-air battery as a power source for the propulsion of electric vehicles. Recent advances have demonstrated:

1. Inexpensive oxygen electrodes and structures.
2. Anode alloys and electrolyte additives to reduce parasitic corrosion and increase cell potential.
3. Efficient bifunctional air electrode which permits charging without the use of a third electrode.
4. New and novel battery designs.

In spite of these developments, successful evolution of a practical system for commercial use in electric vehicles has been hindered by common electrochemical problems such as passivation, dendrite formation and shape change of zinc, as well as instability of the air electrodes. The major chemical problems are carbonate precipitation and limited solubility of zinc reaction products.

The current capability of a zinc-oxygen system can be controlled by changing either the air access or the porosity of the gas diffusion membrane or both. These parameters could be increased until the current density at the air electrode becomes limiting, thereby realizing higher operating currents. In practice, however, the detrimental effects of water vapor and undesirable gas transfers would dictate and regulate allowable air access, thus, reducing current capabilities. The maximum current that could be delivered continually from a zinc/air cell is, therefore, regulated by permissible gas and water vapor diffusion and is known as the limiting current.

5.0 ZINC-AIR SYSTEMS

5.1 INTRODUCTION

As with most of the battery sytems, the zinc-air cell can be operated either as a primary or a secondary battery. Since the primary, "throwaway" type, is impractical to be used in an electric vehicle, this analysis is limited to a review of the rechargeable batteries only.

One of the distinguishing features of the zinc-air battery is that in addition to the conventional throwaway and electrically rechargeable system, a mechanically rechargeable battery has been developed. It consists of a cathode of long life coupled with an anode which, when depleted, is replaced by a fresh anode instead of recharging the discharged battery.

The alternative operating schemes of a zinc-air battery are shown in Figure 2 and the different possible systems are given in Table 4. Six possible alternatives are shown and since the primary, throwaway system has no validity for the application, only the remaining five will be considered.

TABLE 4

SYSTEM	ANODE	ELECTROLYTE	CATHODE
$Zn-O_2$	Insoluble	Static	Bifunctional
Zn-Air	"	"	"
"	Insoluble Refuelable	"	O_2 Reduction Only
"	Zn + Slurry Refuelable	Dynamic	"
"	Soluble	"	Bifunctional
"	Zn Deposit On Beads	"	"

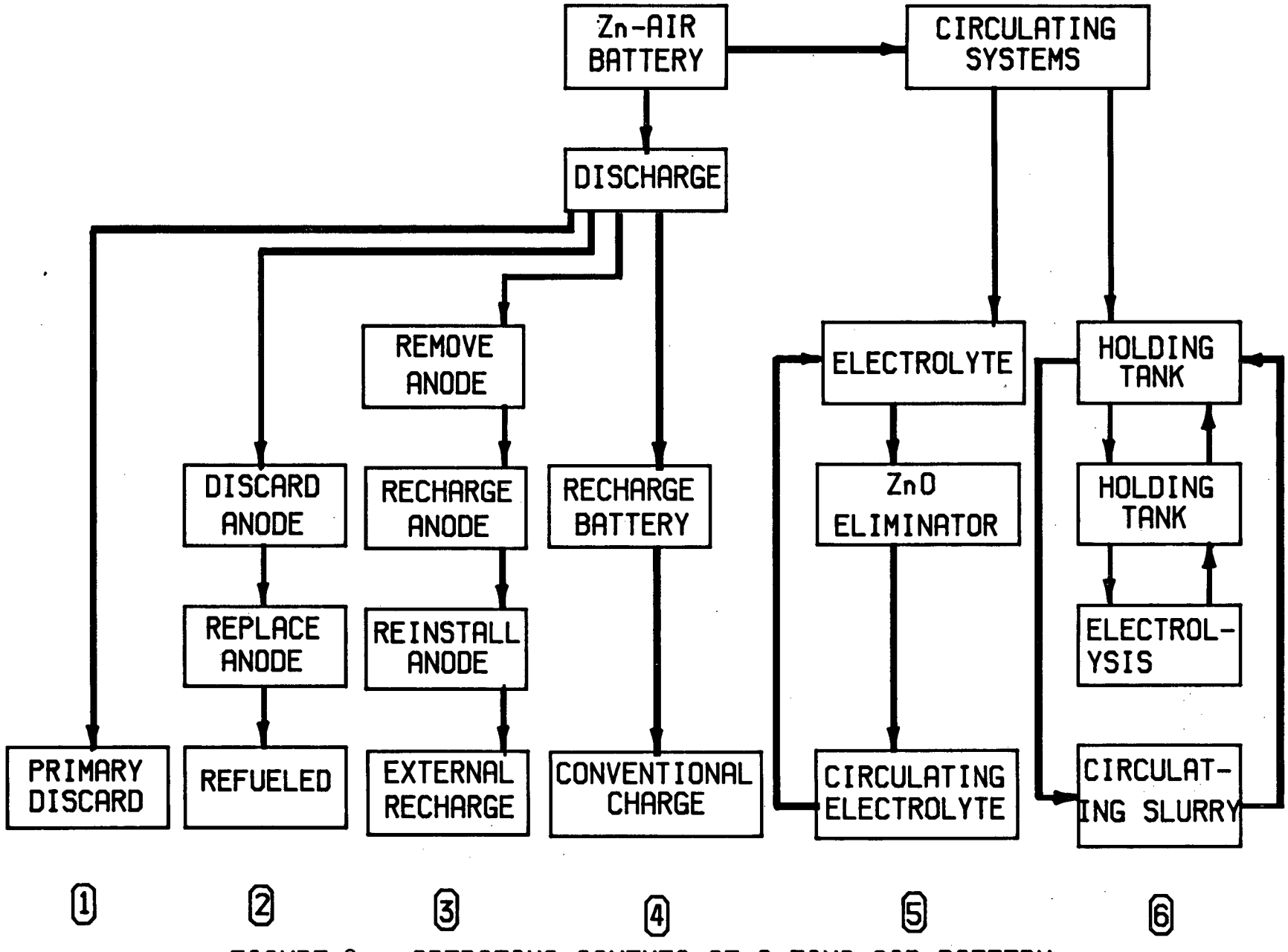

FIGURE 2 - OPERATING SCHEMES OF A ZINC-AIR BATTERY

5.2 MECHANICALLY REFUELABLE SYSTEM

In this method, the discharged anode is replaced at the end of its useful life by a fresh anode. The electrolyte is replaced or replenished at the same time and the process repeated until the cathode's life cycle is over. While the practicality and economics of this approach for the electric vehicle is debatable, this mode of operation enables immediate testing of prototype electric cars under realistic conditions of battery weight and power.

The main advantage of the mechanically rechargeable battery is its high energy density. In the 1970's, a mechanically rechargeable zinc-air battery of 35 kWh was built and tested by General Motors in a 3000 lb test vehicle. However, continued efforts to commercialization were thwarted due to short activated life and poor intermittent performance and problems associated with anode removal.

The operating schemes for the mechanically rechargeable system are shown in #2 and #3 of Figure 2. In the first case the spent anode is discarded, a fresh anode inserted in its place and the battery gets rejuvenated. Scheme #3 is but a logical extension of #2 wherein, instead of discarding the spent anode, it is recharged externally to bring it to its original state and reused.

The refuelable system has some definite advantages. During discharge, the porous zinc anode gets mostly oxidized to ZnO and some soluble zincate species. The battery components can be designed such that at the end of discharge, the spent anode retains its integral structure and can be removed. Spare, fresh anodes enclosed in the separator and impregnated with electrolyte to

reduce activation time are then inserted in the empty anode compartment, the battery is refueled (recharged mechanically) and once again readied to deliver power.

The main advantages and disadvantages of the mechanically rechargeable system are given below.

Advantages

- Problems associated with charging insitu are eliminated.
- By recharging spent anode externally (as opposed to discarding) system economics are improved.
- Since the consumer need not be concerned with charge techniques, user acceptance is improved.
- Cumbersome circulating systems and auxiliary components eliminated.
- Relatively slow charging time of $\sim$ 8 hrs required for conventional batteries is eliminated.
- Vehicle can operate in remote areas where electricity or convenient charge outlets are not available.
- Requires no change of long acquired user habits.
- Feasible to optimize power and energy requirements such that unwanted excess - e.g., excess power for a given energy density as in Pb-acid or excess energy for a given power density as in Fe-air can be avoided.

Disadvantages

- Periodic requirements to purge system, clean settled deposits and replace electrolyte.

- Mechanical and electrochemical degradation of cathode, limiting optimum life expectancy.
- Short activated life.
- Poor intermittent performance.
- Inability to retain the integral structure of spent anodes to facilitate removal.
- Swelling of anodes making removal difficult.
- Shipping and logistic problems of discharged anodes to be recharged.

5.3 ELECTRICALLY RECHARGEABLE

One system that has been experimented with but which never has attained satisfactory status is that of recharging the battery similar to the method used with conventional batteries. This method of recharging, as applied to metal-air batteries, has one basic difference in that the reversible transformation of electrical energy to chemical energy does not occur at the oxygen electrode. Instead, that part of the positive electrode taking part in the oxygen reduction reaction remains the same for the useful life of the electrode and a separate arrangement is necessary to evolve oxygen during the charging of the zinc anode. This is accomplished by either the use of a third electrode or a bifunctional electrode to sustain oxygen evolution on charge. The former makes the design more complicated and a functional and reliable bifunctional electrode with an established acceptable life under practical operating conditions is still in the process of being developed. Until necessary and sufficient performance and reliability can be demonstrated for charging the air electrode, the development of a purely secondary zinc-air battery cannot be completed.

However, recently, greater emphasis and efforts have been directed towards the development of an effective and stable electrocatalyst for oxygen reduction. Much of the work has involved spinel oxides, perovskites and transition metal-macrocyclic complexes.

Using this approach, an excellent bifunctional oxygen catalytic system has been developed and has demonstrated thousands of cycles in laboratory half-cell tests. Furthermore, these electrodes do not employ expensive noble metals such as gold or platinum, thus making it specially attractive to commercial applications.

Continued research efforts in this area are expected to result in a practical, economical and field-tested oxygen electrode, which, in turn, would enable the evolution of a zinc-air battery with recharge capabilities of the classical type that could be used in an electric vehicle.

The major advantages and disadvantages of this system are given below:

<u>Advantages</u>

- Ease of charging
- Simplicity
- User familiarity

<u>Disadvantages</u>

- Development of a viable and cost-effective bifunctional O_2 electrode.
- Increased cost of charge equipment.
- Heavier electricity network.

5.4 CIRCULATING ELECTROLYTE

The circulating electrolyte concept for the zinc-air battery evolved as a means to overcome two basic problems inherent in the static system. Firstly, repeated cycling of the zinc anodes causes dendrites, passivation and shape change and the integral structures of the electrodes deteriorates with time. Secondly, zinc is thermodynamically unstable in the alkaline electrolyte, reacting to liberate H_2 and form the oxide which, due to its limited solubility precipitates as a finely divided solid and the buildup of reaction products leads to cell failure.

Following are the principles of which the zinc-air battery with the circulating electrolyt operates:

1. Solid zinc is used as a base and deposited zinc is used as the active material. This facilitates the use of all or most of the plated zinc during discharge.
2. Electrolyte is circulated continually both during charge and discharge thus providing front surface operation.
3. Reaction products are stored and/or processed external to the battery.

The schematic diagram of the system is shown in Figure 3. The anode on which metallic zinc is plated consists of a thin inert conductive substrate and the cathode is an air electrode of the standard type. At the end of discharge, the amount of metallic zinc will be essentially zero and when fully charged the quantity

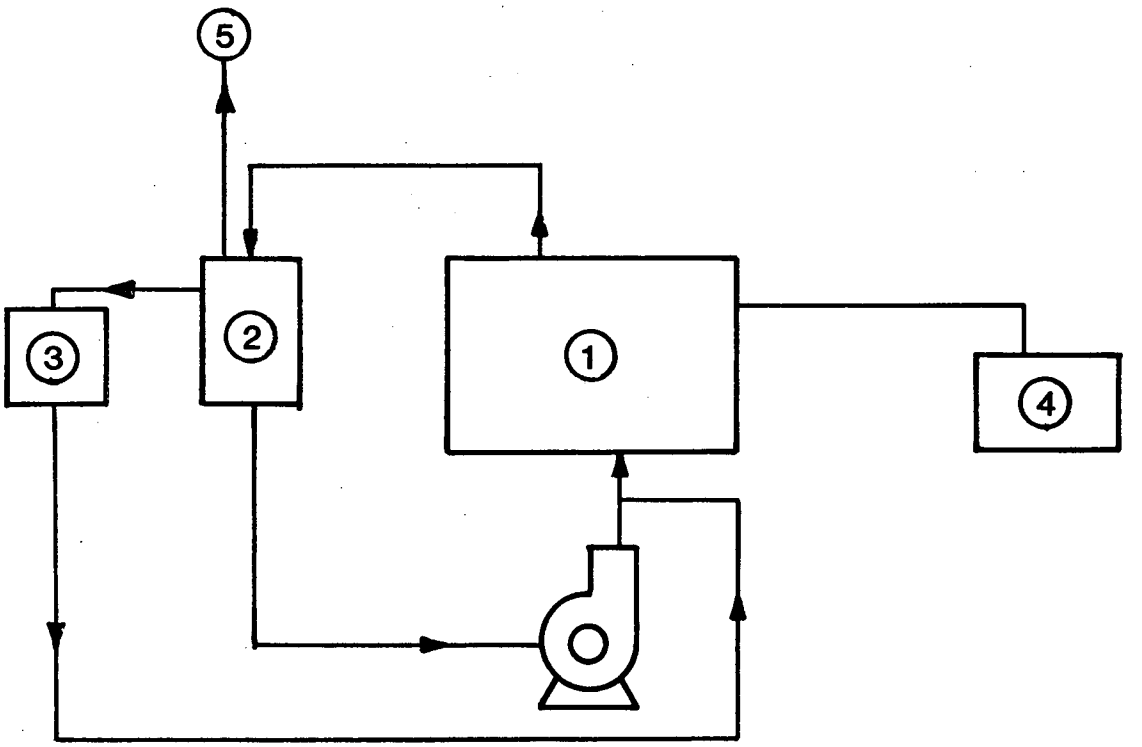

1 Zn-AIR BATTERY STACK

2 HOLDING TANK

3 ZnO ELIMINATOR

4 COMPRESSOR

5 SPENT AIR

FIGURE 3 SCHEMATIC FOR CIRCULATING ELECTROLYTE.

of zinc present will be proportional to the designed capacity of the cell.

During discharge, air bubbles through the electrode into the electrolyte and reacts with the dissolved zinc to form the oxide which starts to precipitate when the solubility limit is reached. This material, along with unused air is removed from the battery stack by the circulating electrolyte. The zinc oxide is stored external to the system and can either be reprocessed or discarded.

The charging process is the reverse of the above. When a potential is applied to the cell terminals, the zinc oxide is plated back on the substrate in the form of zinc with the evolution of oxygen on the surface of the air electrode. The oxide, stored externally is fed back into the circuit.

It can readily be seen that this system is capable of achieving a high energy density and can store large quantities of energy. However, in order to accomplish this, simplicity has to be sacrified and a bulky, complicated system needs to be employed for electrolyte circulation and zinc storage.

5.5 CIRCULATING ZINC SLURRY

A slightly modified version of the circulating electrolyte system is the circulation of a slurry containing both electrolyte and zinc particles. The slurry is pumped through either tubular or parallel plate cells and regeneration of zinc is handled external to the cell stack, but on-board the vehicle. During charge zinc is deposited in the electrolysis unit and the zinc-KOH slurry is pumped through

the cell. During discharge, zinc forms zincate, which dissolves in the electrolyte and is removed. The operating scheme is shown in Figure 4. In other words, in this system the electrolyte is continually circulated carrying the active anode material.

The advantages of the use of a "circulating electrode" zinc powder, suspended in electrolyte are as follows:

- Problems associated with dendrite formation, shape change and short circuit are eliminated.
- Since charging the air electrode is not needed, design becomes simpler--third electrode or bi-functional electrode for oxygen evolution is not required.
- There is no carbonate buildup since decarbonation of electrolyte is done at regular intervals.
- Optimization of the system is simplified for a given set of performance requirements.
- User acceptance is enhanced due to the ease of recharge which consists merely of emptying spent slurry and filling with fresh reactants.
- Vehicle is immobilized only for a short time.

The disadvantages are:

- Complexity of system is increased.
- Additional equipment such as pumps, electrolyte reservoir and air separator reduces useful weight to power the vehicle.
- Use of built-in charger introduces volume penalty.
- Reliability is decreased.

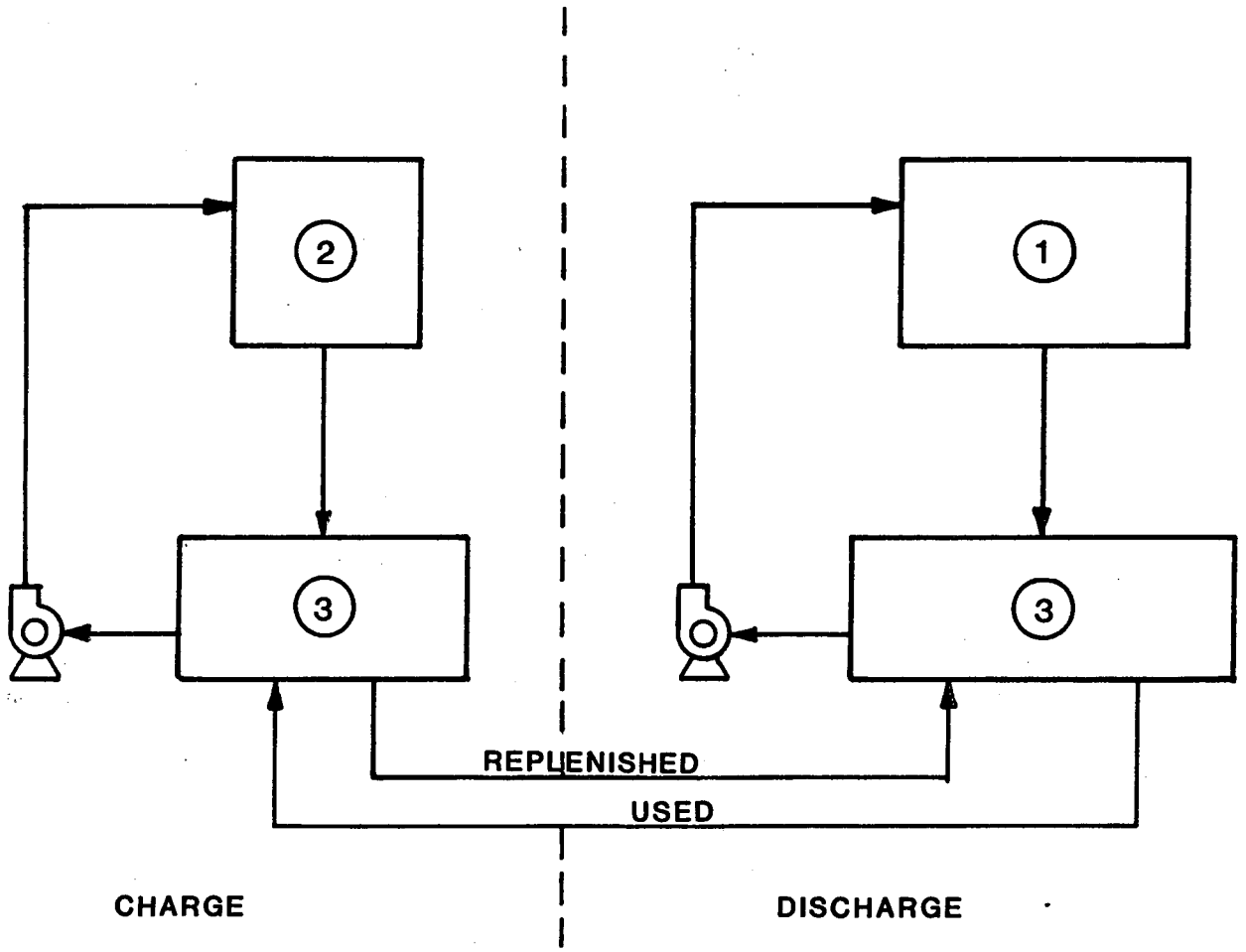

1 CELL STACK

2 RECHARGER

3 HOLDING TANK

FIGURE 4 SCHEMATIC FOR CIRCULATING SLURRY.

6.0 SYSTEMS ANALYSIS

6.1 SYSTEM CONSIDERATIONS

Prior to embarking on the analysis of the system, it is necessary to examine the problems associated with it. The major problems that can be attributed to the individual components as well as the whole system are shown schematically in Figure 5. Many of these can be either eliminated or minimized by the design of the system even though it might require a compromise among some of these aspects.

In addition, certain special characteristics that are inherent in and unique to the system have to be taken into consideration during the design. These are discussed below:

6.1.1 Effect of Temperature

In general, alkaline batteries are not known to perform well at low temperatures. The high concentration of KOH (∿35%) required to give good electrical conductivity is sensitive to temperature changes, lower temperatures causing the ion mobility to be reduced. This, in turn causes a lowered operating voltage.

If lower values of potentials and energy densities can be tolerated, the battery can function below 10°C but the optimum range for satisfactory performance is between 10 and 40°C.

6.1.2 Storage Life

Shelf life of a zinc-air battery is reduced mainly due to the self-discharge of the anode. This is minimized by zinc additives and controlling air access to the cell. With respect to the EV, this is not considered to be a serious problem,

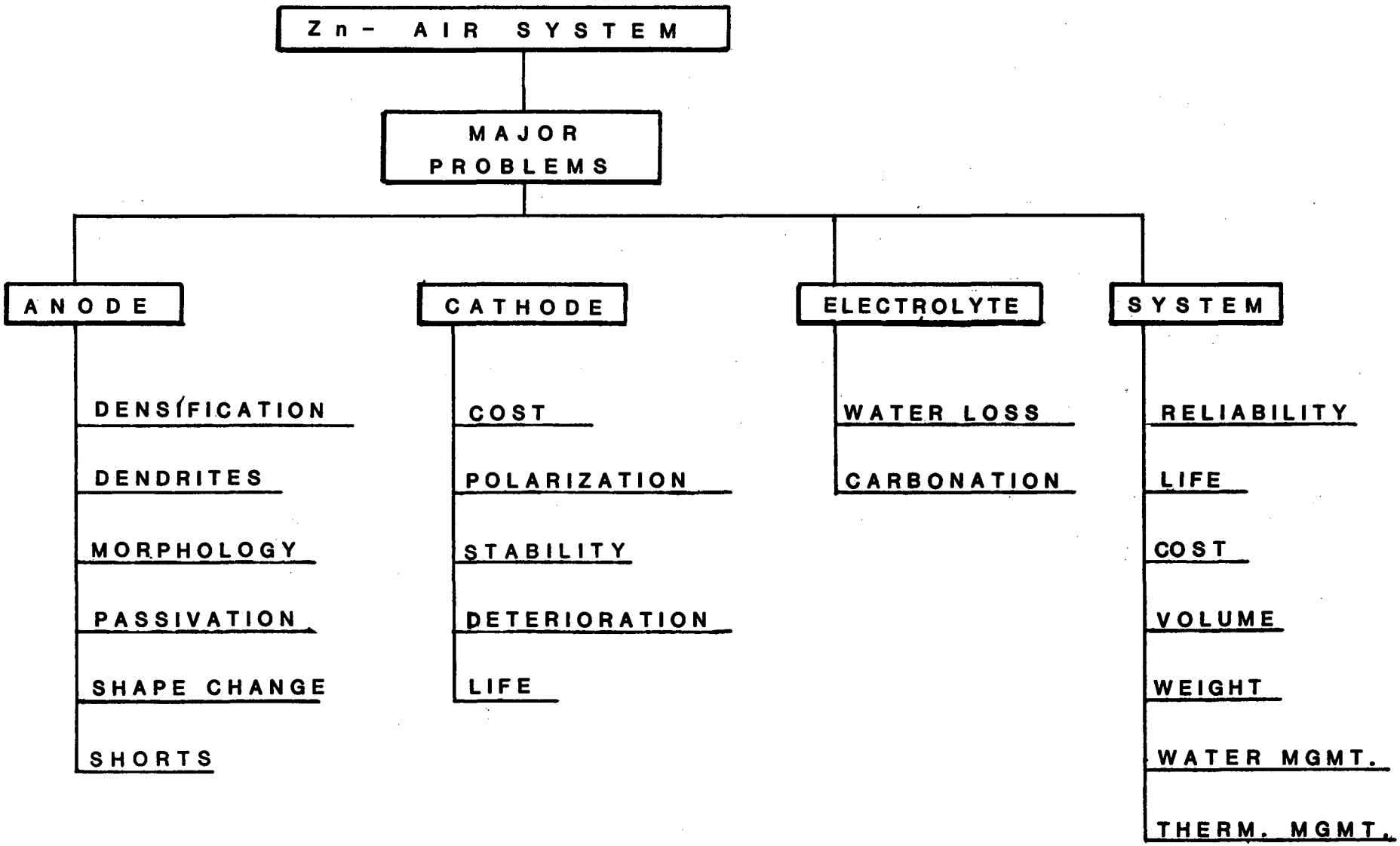

FIGURE 5 SYSTEM PROBLEMS.

since under practical use, a vehicle is not expected to remain idle for extended periods of time and recharging will be required long before the cell capacity gets depleted due to self-discharge of zinc alone.

Carbonation of the electrolyte, direct oxidation of zinc and effect of gas transfer contribute to decreased service life. A good systems approach has to take into account all of these factors, so that the cell design optimizes the system variables and results in a realistic and functional battery which is also cost effective.

6.2 SYSTEM DESIGN

The calculations to be done for designing the system have to be based on certain assumptions since this review is a conceptual design and is not evolved from experimental work. Where applicable, data from published articles are used.

6.2.1 Refuelable Battery

Assume total vehicle weight is 2000 lbs, 25% of which is the maximum allowable for the battery.

Weight of battery stack = 500 lbs

Assume the stack consists of a series of batteries, each with the following specifications:

No. of cells per battery	= 10
Operating voltage @ 1.2/cell	= 12 V
Capacity per cell	= 100 Ah
ECE of zinc	= 1.22 g/Ah
	= 372 Ah/lb
Zn required	= 100/372 = .27 lbs
Zn utilization (assumed)	= 75%
Actual Zn	= .27/.75 = .36 lbs

Electrolyte @ 2.5 cc/Ah = 2.5 x 100
= 250 cc

Density of 35% KOH = 1.341 g/cc

Electrolyte weight = $250 \times 1.341 \times \frac{1}{454} = .74$ lbs

Cell Weight:	Anode	= .36 lbs
	Electrolyte	.74
	Cathode (20% of anode)	= .07
		1.17 lbs/cell

10 cells = 11.7 lbs

Others - Case, connectors, grid, separator, etc. @ 50% = 5.7 lbs

Weight per Battery = 17.4 lbs

Maximum allowable battery weight = 500 lbs

Number of batteries in stack = 500/17.4
$\simeq$ 30

Assume 8 hr discharge rate, corresponding to overnight charging time for a rechargeable battery.

Power per Battery = $\frac{100}{8} \times 12 = 150$ W

Specific Power = 150/17.4 = 8.6 W/lb

Energy per Battery = 100 x 12 = 1200 Wh

Specific Energy = 1200/17.4 = 70 Wh/lb

Energy Content = 1200 x 30 = 36 kWh

Controlling Factors for EV:

Range - energy density Wh/lb
Acceleration - power density W/lb

Average Energy Requirements

No.	1	2	3
Mode	Urban	Suburban	Turnpike
Avg. Speed, mph	15	30	60
No. stops/mile	5	1	.01
kWh/mile	.189	.193	.268
Energy for Accessories 10%	.019	.019	.027
Dvg. & Acces.	.208	.212	.295
System Eff. %	75	75	75
Total Energy Reqd. kWh/mile	.277	.283	.393
Range in miles for 36 kWh	130	127	92

Life of Battery = 50,000 miles

No. of anode changes = 50,000/130

= 385

Required cathode cycle life of ∿400 cycles is realistic

Material Requirements

Zinc: .36 lbs (cell) x 10 (battery) x 30 (stack)

x 1.2 (20% excess)

= 130 lbs

Electrolyte: (35% KOH)

= 2.5 cc/Ah x 100 (cell) x 10 (battery) x 30 (stack)

= 75 l

Cathode:

Current @ 8 hr rate = 100/8 = 12.5 Amps

The average operating current density that would give acceptable and reproducible values of polarization is assumed to be 50 mA/cm² and the cathode design is based accordingly. Cathode area = 12.5 x 1000/50 = 250 cm²/cell

Total required area: = 250 x 10 x 30

= 75,000 cm²

Gold loading = .75 mg/cm²

= .75 x 75,000/1000

= 56.2 gms

Substrate, (graphite) @ 15 mg/cm²

= 1120 gms

Teflon @ 5 mg/cm²

= 380 gms

PTFE film = 75,000 cm²

Grid = 75,000 cm²

Oxygen:

Theoretical Consumption

$= 5.81 \times 10^{-5}$ (cm³/mA-sec) x 1000 x 3600 (cm³/Ahr)

$= 5.81 \times 10^{-5} \times 10^{5} \times 36$

= 210 cm³/Ahr

Oxygen Consumed

= 210 cm³/Ahr x 100 (cell) x 10 (battery) x 30 (stack) x $1/2{\cdot}54^3 \times 12^3$ ft³

= 210 x 100 x 10 x 30/16·39 x 1728

= 222 ft³

The material costs are summarized in Table 5. The cathode is designed to last for the life of the battery and is therefore a fixed cost. Anode, electrolyte and oxygen are variable costs dependent upon the number of recharges.

Case A

- Use pure O_2
- Discard zinc

Case B

- Use unscrubbed air discard zinc

Case C

- Use scrubbed air. Cost of scrubbing is 50% of O_2 cost, discard zinc

Case D - Most realistic

- Use scrubbed air
- Externally reprocess zinc. Cost savings ∿ 50%

Cost breakdown is summarized in Table 6.

TABLE 5

MATERIAL COST

MATERIAL	QUANTITY	UNIT PRICE $	COST $
Zinc	130 lbs	0.50/lb	65.00
Anode @ 10% over			71.50
Electrolyte	75 l	1.60/l	120.00
Gold	56 g	400/T.oz	722.00
Substrate	1120 g	1.06/lb	2.62
Teflon	380 g	8.50/lb	7.10
Grid	75,000 cm^2	2.47/ft^2	6.50
PTFE Film	"	3.97/ft^2	10.52
Bicarb	7.70 lbs	7.84/kg	1.86
Cathode	75,000 cm^2		750.66
Oxygen	222 ft^3	4.00/100 cu.ft.	8.88
Energy Content of Battery			= 36 kWh

Component	Cost/kWh
Anode	$ 1.99
Electrolyte	3.33
Cathode	20.85
Oxygen	.25
Hardware	1.45
	$27.87

TABLE 6

MATERIAL COST BREAKDOWN

Zn-AIR REFUELABLE SYSTEM

CASE	A	B	C	D
SYSTEM	PURE O_2 $/kWh	AMBIENT AIR $/kWh	SCRUBBED AIR $/kWh	REALISTIC $/kWh
Zinc	1.99	1.99	1.99	1.00
Cathode	20.85	20.85	20.85	20.85
Electrolyte	3.33	3.33	3.33	3.33
Oxygen	.25	0	.13	.13
Hardware	1.45	1.45	1.45	1.45
Total Material Cost	27.87	27.62	27.75	26.76

6.2.2 Electrically Rechargeable System

An electrically rechargeable zinc-air battery can be developed either as an open-air system or pressurized, sealed oxygen system. The trade-off between the two will be the cost impact of a CO_2 scrubber and watering system required for the open air system versus a pressure vessel to contain the oxygen in the sealed version.

In addition to these special requirements, areas that need to be addressed for both systems are:

1. Development of a stable, long-life inexpensive bifunctional air electrode.
2. Minimizing shape change and densification problems due to repeated cycling of the zinc electrode.
3. Improved charge and charge control techniques to improve uniformity of zinc deposits.

The refuelable system has the advantage of convenience since it requires no departure from the long acquired driving habits. Furthermore, it facilitates the optimization of power and energy requirements for any particular application. However, while replacement of the anode at the end of discharge is done easily, discarding the discharged anode would not be economical. By externally recharging the discharged anode, this problem is circumvented to a certain extent but the logistics of establishing a viable, practical and cost-effective system for refueling does not seem appropriate for the private automtobile at this time.

It is imperative to maintain an energy reserve after driving for an average period for batteries of the classical

type so that deep cycling can be avoided and life extended.

For electric vehicles, immobilization for charging at night is not a problem. But to expect the private owner to maintain his battery in a full state of charge at all times is unrealistic and may dissuade full acceptance of of the electric vehicle. Higher charge rates will result in reduced life of the battery, increased cost of charge equipment and will require a heavier electricity network. Despite these considerations, if sufficient performance and reliability can be demonstrated, an "internally" rechargeable zinc-air system may be the ultimate answer to a functional electric vehicle.

The main advantage is using atmospheric oxygen is the elimination of a pressurized storage facility which results in added weight and complexity. But the reaction of carbon dioxide with the electrolyte produces carbonates which cause blockage of the electrode and lowers the ionic conductivity of the electrolyte. To avoid these detrimental effects, scrubbers are required. The choice of the system between open air and sealed oxygen would therefore be dictated by the comparative costs of the scrubber unit and pressure vessel.

The installed cost would consist of the cost of the battery plus the auxiliary unit (scrubber or pressure vessel). Since zinc and electrolyte will be reused, the operating cost would be reduced considerably as only water will be required to make up for losses. However, the cost of electricity used for charging the battery should be considered as an added operating cost.

6.2.2.1 Open Air System

The common problem inherent in systems employing alkaline electrolyte and air is the conversion of the hydroxide to carbonate by the carbon dioxide in air resulting in a loss in power output. In order to minimize the carbonation, the air is first passed through a basic solution which is replaced periodically. This increases the weight, volume and overall chemical requirements of the power unit.

MEA (Monoethanolamine) has been used effectively in conventional scrubber systems. Though inexpensive, MEA is toxic, subject to thermal decomposition and heat requirements for thermal regeneration are substantial. Therefore, there is a growing trend to replace MEA with polymeric amines for the removal of carbon dioxide. The main advantages of polymeric amines are:

- Much more stable than monomeric amines.
- Higher thermal stability.
- Reduced volatility.
- More resistant to oxidation by air.
- Odorless
- Basicity can be controlled within appreciable ranges.

The major disadvantages of the polymeric amines is their slow rate of reaction in the solid state. Secondly, due to the higher viscosity, it is harder to use them in aqueous solutions. For the electric vehicle application this could actually be advantageous since use of these polymers in the solid form would be better than employing liquid scrubbers. The amines absorb relatively small quantities of water and on regeneration only the small amount absorbed has to be evaporated, thus reducing

the heat required for regeneration.

A heat-regenerable scrubber system using polymeric amines is still in the experimental stage. When fully developed this could result in the optimum scrubber system for electric vehicles. For the purpose of this analysis, a conventional caustic scrubber is recommended at this time.

Water management is another area that requires consideration in the open system as one of the decay mechanisms is due to the transfer of water vapor which occurs due to the difference in partial pressures between the vapor pressure of the electrolyte and surroundings. In addition some water will be lost due to entrainment.

For an electrolyte containing 35% by weight of potassium hydroxide, a humidity of approximately 60% is the equilibrium value. At humidities below 60%, the system starts to lose water thereby increasing electrolyte concentration. This, eventually can lead to cell failure due to the electrolyte becoming inadequate to sustain the cell reactions.

Above 60%, the system takes up water from the surroundings leading to decreased concentration and conductivity and the flooding of the catalytic layer. The electrochemical activity is reduced causing cell failure.

The following assumptions are used for the purpose of this analysis. The basis for calculations are the same as in the mechanically rechargeable system.

Nominal CO_2 content in air	= .03%
Removal efficiency	= 85%
Power per battery	= 150 watts

Air consumption	= 1000 l/hr.
CO_2 to be removed	= 0.02 lbs.
Required bed volume	= 0.06 cft.

Caustic potash (35/ w/w) required

$= .06 \times 12^3\ 2.54^3 \times 1.341 \times \frac{1}{454}$

= 5 lbs.

Weight of scrubbing equipment	= 35 lbs.

A minimum of two scrubbers will be required to provide continuous operation and the caustic solution has to be replaced every 10 cycles. (app. 1000 miles)

Scrubbing units	= 2 (35 + 5)
	= 80 lbs.

The frequency of filling up the water tank to make up for water losses will be the same as that for filling a compact automobile with gas. Assuming:

Capacity of gas tank	= 10 gallons
Gas consumption	= 35 MPG
Range for each fill up	= 350 miles
Range with 25% reserve	= 260 miles

The water tank in the electric vehicle should therefore have the capacity for driving 350 miles prior to refilling. This corresponds to approximately 3½ cycles.

Water required @ .25 cc/AH	= 22 lbs/cycle
For a range of 350 miles	= 77 lbs.
Water holding tank capacity	= 10 gallons
Wt. of polyethylene tank	= 7 lbs.
Circulating pump	= 5 lbs.

Wt. of water system	= 89 lbs.
Wt. allowable for battery	= 500 - (80 + 89)
No. of batteries in stack	= 331/17.4
	= 19
Energy content	= 19 x 1200
	= 23 kWh

Range: Urban = 23/.277 = 83 miles

Suburban = 23/.283 = 81 miles

Turnpike = 23/.393 = 59 miles

No. of charge-discharge cycles for

Urban driving = 50,000/83

= 600

Since the stack consists of only 19 batteries as opposed to 30 for the mechanically rechargeable unit, the material cost will decrease by a factor of,

19/30 = 0.63

MATERIAL COSTS

Zinc	82 lbs.	$ 40.95
Anode	-	45.00
Electrolyte	48 l	75.60
Gold	17.7 g	227.40
Substrate	355 g	.83
Teflon	119 g	2.24
Grid	47,500 cm^2	4.12
PTFE	"	6.63
Bicarb	2.4 lbs.	0.58
Cathode	47,500 cm^2	241.80

Caustic	10 lbs.	5.42
Scrubbers (2)		200.00
Scrubbing unit		205.42
Water		-
Polyethylene Tank		16.00
Submersible circulating pump		50.00
Water system		66.00

Total material cost = $633.82

For energy content of 23 kWh

= $ 27.56 kWh

The development work being carried out at ERC on the use of perovskites as catalysts for air electrodes shows promise and this is expected to prove to be an effective replacement for the noble metal catalysts. On this basis, if perovskites are used, the cost of catalyst (which is the bulk of the cathode cost) and hence the initial material cost would be decreased. Cost of catalyst amounts to 94% of the cathode cost and 36% of the installed cost using gold at a loading of .75 mg/cm^2.

Perovskites are usually prepared from metal salts (acetates, carbonates, nitrates, oxalates, etc.) or oxides of the respective elements. On the basis of work currently being carried out at ERC, one of the perovskites that could effectively replace gold catalyst at a reduced cost is $La._5 Sr._5 Ni O_3$. The following data is based on experimental work.

Catalyst Loading	= 50 mg/cm^2
Reaction yield	= 60%
Cost of raw materials	= $8.26 per 100 g perovskite

Cathode area for EV = 47,500 cm^2

Perovskite required @ 50 mg/cm^2

= 2.375 kg

Cost of raw materials = $196.18

The cost of raw materials is based on small experimental quantities and a 25% discount is assumed for large amounts. The yield can conceivably be increased to 85% and loading reduced by half by admixing graphite to the catalytic layer.

Based on these assumptions,

Projected raw material cost = $51.90

Comparable cost for gold catalyst

= $227.40

By replacing gold by perovskites

Savings in cost of catalyst = 76%

Cathode Cost = $ 66.30

Material cost = $458.32

= $ 19.93/kWh

Cost contribution of catalyst to

Cathode = 78%

Material cost = 11%

OPERATING COSTS

The only operating costs for this system are the caustic solution for scrubbing and the cost of electricity.

No. of cycles = 600

Caustic solution required @ 5 lbs./10 cycles

= 300 lbs.

Cost of caustic = $162.50

Electricity costs @ 6¢/kWh	= $828.00
Total operating cost	= $990.50
	= 1.98¢/mile

6.2.2.2 Sealed O_2 System

Oxygen Pressure Vessel:

Capacity	= 200 cft.
Weight	= 130 lbs.
Cost	= $363
Wt. of battery	= 500-130
	= 370 lbs.
No. of batteries	= 370/17.4
	= 21
Energy content	= 1200 x 21
	= 25 kWh

Range for 25 kWh

Urban	= 25/.277 = 91 miles
Suburban	= 25/.283 - 88 miles
Turpike	= 25/.393 = 64 miles

No. of charge-discharge cycles

= 50,000/91

= 550

Material cost will decrease by

21/30 = 0.7

MATERIAL COSTS

Zinc	91 lbs	$45.44
Anode		50.05
Electrolyte	52.5 l	84.00
Gold	19.7 g	252.70
Other		16.00
Cathode	(52,500 cm^2)	268.70
Pressure Vessel		363.00
Total		765.75

For energy content of 25 kWh

= $30.63/kWh

If gold is replaced by perovskite,

Cathode cost $ 73.67

Material cost = 570.72

= 22.83/kWh

OPERATING COST

The only operating cost for the sealed system will be the cost of electricity at 6¢/kWh.

= $825

Cost per mile = 1.65¢

The preceeding data are summaried in Table 7 and the weight analysis of the battery is shown in Figure 6.

TABLE 7

SYSTEM COMPARISON

OPEN AIR VS. SEALED OXYGEN

SYSTEM	OPEN AIR	SEALED OXYGEN
Wt. of stack (lbs)	331	370
No. of batteries	19	21
Energy (kWh)	23	25
No. of cycles	600	550
Material cost ($/kWh)		
- gold	27.56	30.63
- perovskite	19.93	22.83
Operating cost (¢/mile)	1.98	1.65

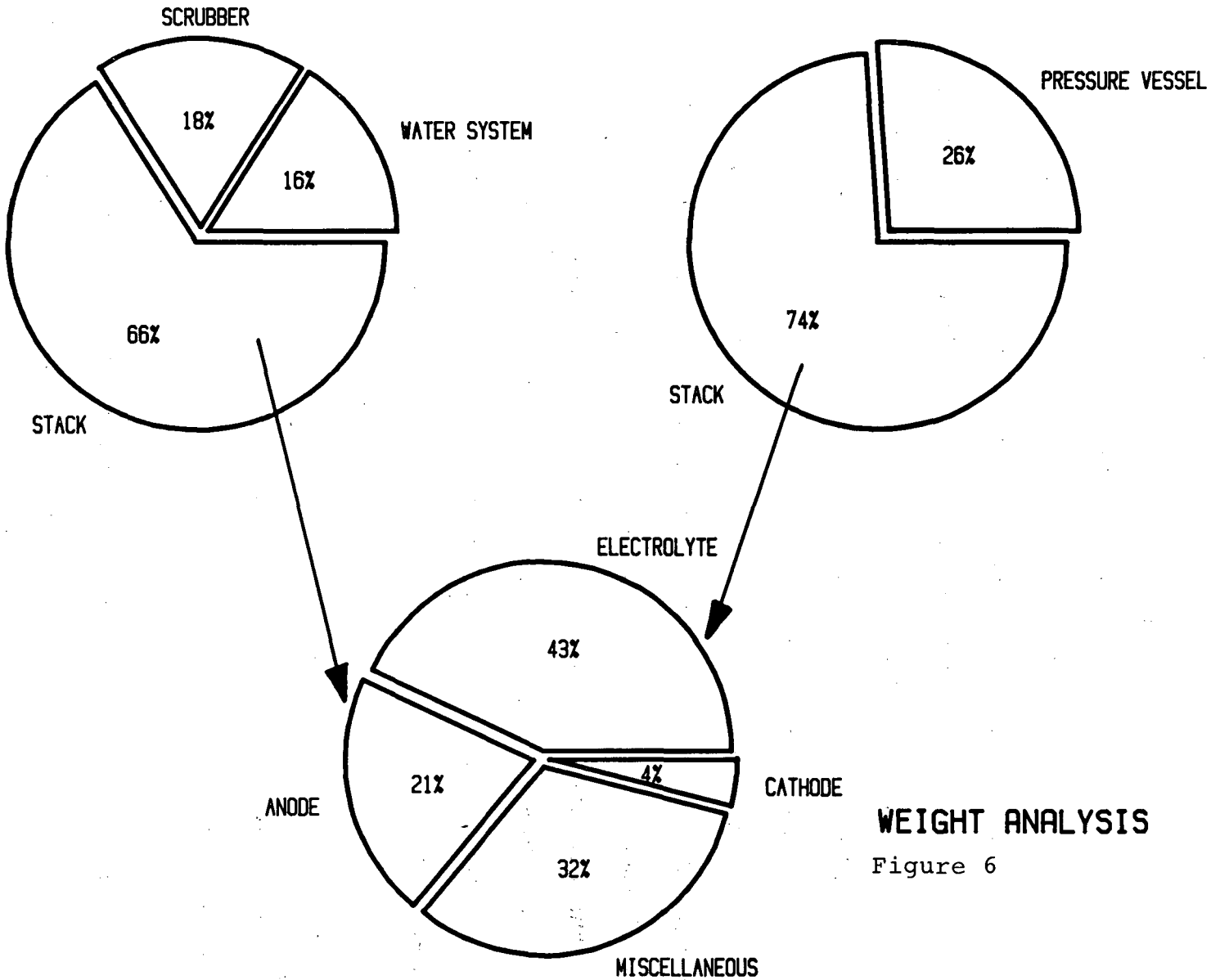

WEIGHT ANALYSIS

Figure 6

6.2.3 Circulating System

6.2.3.1 Circulating Electrolyte System

This is one of the earlier systems to be investigated as a primary motive power source for electric vehicle propulsion. This approach eliminates many of the problems associated with the zinc electrodes. However, compared to mechanically refuelable batteries and systems using classical methods for recharging, complexing and weight are increased.

The basic operating scheme is shown in Figure 7. During charge, a potential is applied across the cell with simultaneous circulation of the electrolyte. Zinc oxide in the electrolyte is dissociated; the zinc is deposited on the substrate with evolution of oxygen on the surface of the porous cathode. The zinc oxide is continuously replenished from a storage point external to the cell.

During discharge, a reverse reaction takes place. Pressurized air passes through the porous electrode and the oxygen in air gets reduced by the catalyst at the electrolyte interface and the dissolving zinc forms zinc oxide.

With repeated cycling, the zinc oxide precipitates as a finely divided solid and is swept away by the circulating electrolyte. Excess zinc oxide is separated from the electrolyte and stored external to the cell to be used during the charging cycle.

This method increases system complexity due to the requirement of added equipment such as a pump to circulate

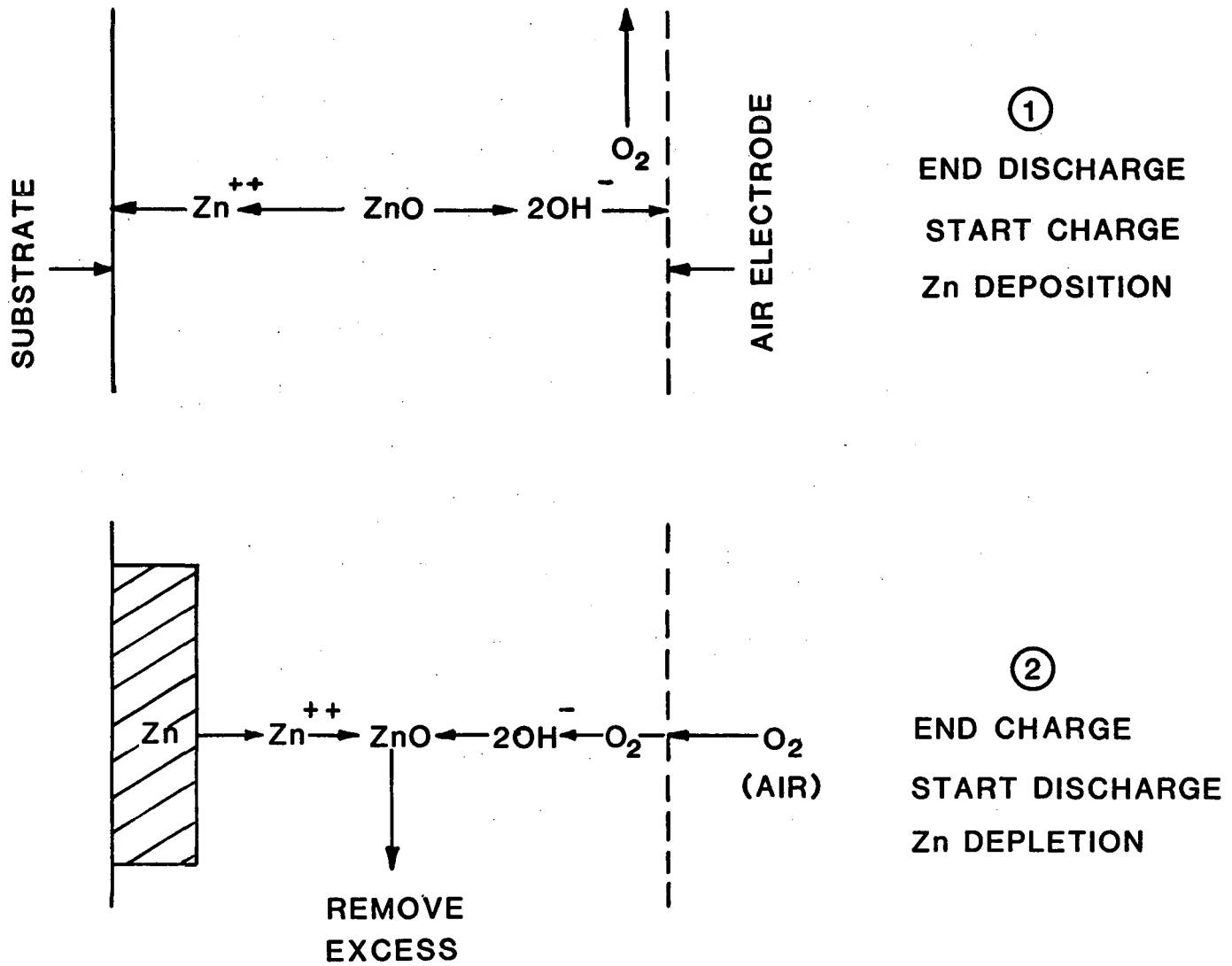

OPERATING SCHEME

-CIRCULATING ELECTROLYTE

FIGURE 7

the electrolyte, electrolyte reservoir and air separator to flush out spent air rich in nitrogen content. In addition, an air compressor and equipment to separate and store zinc oxide would be required. However, since the cell and cell stacks do not contain any stored reactants (other than metallic zinc) the design can be compact and relatively light.

Since the cell stack can be located away from auxiliary equipment, it could conceivably be housed inside a pressure vessel to constitute a closed oxygen system. This concept would have three distinct advantages:

1. Equipment to separate and flush spent air would not be required.
2. Need for CO_2 scrubbers required with ambient air would be eliminated.
3. Since an air compressor would not be required, total weight and initial costs would be reduced.

The basis for cost calculations is the same as before:

Weight of vehicle	= 2.000 lbs.
Allowable weight for power source @ 25%	= 500 lbs.
O_2 pressure vessel	= 130 lbs.
Circulating pump	= 10 lbs.
ZnO separator and storage	= 12 lbs.
Electrolyte storage	= 7 lbs.
Piping and fittings	= 3 lbs.
	162 lbs.

Weight allowable for battery	= 500 - 162
	= 338 lbs.
No. of batteries in stack	= 338/17.4
	= 19
Energy content	= 23 kWh
Range: Urban	= 83 miles
Suburban	= 81 miles
Turnpike	= 59 miles
No. of charge-discharge cycles for Urban Driving	= 600

MATERIAL COSTS

Zinc	82 lbs	$ 40.94
Anode		45.00
Electrolyte	48 l	75.00
Gold	17.7 g	227.40
Perovskite		51.90
Other		14.40
Cathode	(47,500 cm^2)	
Gold		241.80
Perovskite		66.30
Pressure vessel		363.00
Auxiliary equipment		100.00 (assumed)
TOTAL (Gold)		= $825.40, $35.89/kWh
(Perovskite)		= $649.90, $28.26/kWh

OPERATING COSTS

The major operating cost is the cost of electricity at 6¢/kWh.

= .06 x 23 x 600 = $828.00 = 1.66¢/mile

6.2.3.2 Circulating Slurry System

As indicated earlier, this approach is a modification of the circulating electrolyte system and was developed by General Electric of France and Sony in Japan. The method consists essentially of circulating a slurry containing zinc particles through either tubular or parallel - plate cells. Regeneration of zinc particles is achieved externally. During discharge, slurry is pumped through the cell and the zinc gets converted to zincate which dissolves in the electrolyte.

Charging is usually accomplished on board in a separate electrolysis unit; zinc is deposited in the cell and removed as particulates by the circulating electrolyte. Alternately, the spent slurry can be replaced and recharged externally.

The circulating slurry battery consists essentially of three parts:

1. Anode current collector of either tubular or parallel plate design which discharges zinc particles in turbulent flow in the electrolyte. The reaction product partially dissolves in the electrolyte.

2. Separator to prevent contact between zinc particles and air electrode. The thickness, porosity, pore size distribution and resistivity of the separator material should be such that OH ion transport is maximized with minimal IR drop.

3. Suitable air electrode capable of hundreds of charge-discharge cycles with acceptable values of polarization and cost effective.

The complete system would consist of:

1. In vehicle - battery, electrode assembly, electrolyte, zinc holding tank and supply system.

2. Outside vehicle - Regenerator.

The electrochemical process is identical to that of a conventional zinc-air cell with one difference - in the traditional rechargeable systems, zincate solubility is low. In the case of the circulating electrolyte system, the consumed zinc should be present in the electrolyte in the form of soluble zincate at the end of discharge. This is made possible by incorporating additives to increase the solubility factor. The operating scheme is shown in Figure 8.

The choice between an on board electrolysis unit and an external recharge system would be dictated by trade-offs in convenience of classical recharge in the first case versus better performance in the later case.

Even though the design may have a tubular configuration, in order to keep the basis the same, the following cost calculations are done assuming rectangular cells. It is presumed that this would be a fair representation of a system using tubular plates and the differences in costs between the the two designs would not be significant.

<u>Case I</u> <u>On-Board Electrolysis Unit</u>

Allowable system weight = 500 lbs.

Assume useful load is 70% of system weight

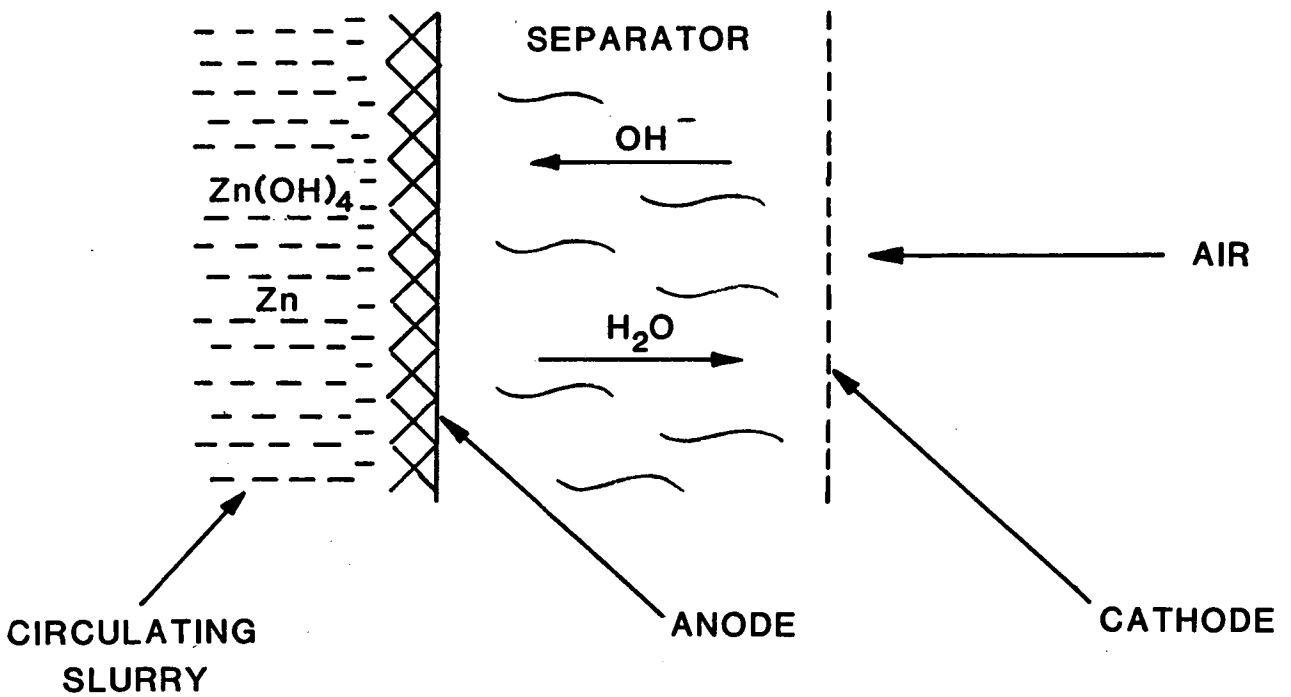

OPERATING SCHEME

-CIRCULATING SLURRY

FIGURE 8

Battery weight		= 350 lbs.
No. of batteries in stack		= 350/17.4
		= 20
Energy content		= 24 kWh
Range: Urban		= 87 miles
Suburban		= 84 miles
Turnpike		= 61 miles
No. of charge-discharge cycles, Urban		
		= 575

MATERIAL COSTS

Zinc	87 lbs	$43.15
Anode		47.37
Electrolyte	50 l	79.58
Gold	18.7 g	239.30
Perovskite		54.56
Other		15.23
Cathode	50,250 cm^2	
Gold		254.53
Perovskite		69.79
TOTAL (Gold)		381.48
(Perovskite)		196.74

Case I On-Board Electrolysis Unit

Equipment cost		= 508.06
Total material cost	(Gold)	= 889,54
	(Perovskite)	= 704.80

OPERATING COSTS

Cost of electricity at 6¢/kWh = .06 x 24 x 575

= $828.00

= 1.66¢/mile

Case II External Recharging

Allowable system weight = 500 lbs

Assume 85% of the wieght will be useful load since recharging facilities will be located outside the vehicle.

Battery weight = 425 lbs

No. of batteries in stack = 425/17.4

= 24

Energy content = 29 kWh

Range: Urban = 106 miles

Suburban = 102 miles

Turnpike = 74 miles

No. of charge-discharge cycles,

Urban = 472

MATERIAL COSTS	Equipment	$254.03
Zinc	107 lbs	52.02
Anode		57.22
Electrolyte	60 l	96.12
Gold	22.33 g	290.04
Perovskite		66.89
Other		17.41
Cathode	60,000 cm^2	
Gold		307,45
Perovskite		84.30
TOTAL (Gold)		714.82
(Perovkiste)		491.67

Since charging will be done in separate facilities such as service stations, no equipment costs are applied.

OPERATING COSTS

The operating costs, payable to the service station by the consumer cannot be estimated since this would depend on:

- The number of vehicles
- Size of service station
- Number, location and distance between stations
- Unit cost of energy
- Type of energy in use

7.0 PERFORMANCE PROJECTONS FOR ZINC-OXYGEN AND ZINC-AIR BATTERIES

As a basis for comparison of the zinc-air systems as EV propulsion batteries, Table 8 gives the projected characteristics of two systems along with other advanced batteries which are currently being developed elsewhere. The projections show that for an equal battery weight the zinc-air battery would provide an EV with a range equal to or greater than any of the other advanced battery systems under development. The zinc-air system would be the lowest cost system. The life of most of the batteries listed is unknown simply because vehicle size cells have not cycled satisfactorily due to both electrochemical and mechanical problems. Even if technical problems can be solved, serious questions of safety exist especially for the halogen batteries in vehicles. Safety, reliability and overall energy efficiency are also key concerns for the high temperature NaS and LiFeS systems. The prospects of overcoming these issues for any of the halogen or high temperature batteries even during the next five years are, in ERC's opinion, extremely remote.

7.1 SPECIFIC AREAS OF IMPROVEMENT

Prior to launching a long-term development effort, a study must be conducted to establish the comparative technical and cost risk/benefit of zinc-oxygen and zinc-air for EV's.

The basic electrochemical problems of each are similar but the mechanical problems associated with battery development are vastly different. For example, the zinc-air battery is vented and as such will require a CO_2 scrubber to minimize carbonate buildup in the air electrodes and electrolyte. During charge,

TABLE 8

PERFORMANCE PROJECTIONS OF ZINC-AIR BATTERIES

COMPARED TO OTHER ADVANCED BATTERIES FOR EV's

BATTERY TYPE	ENERGY CONTENT OF 500 lb. BATTERY (kWh)	APPROX. RANGE (miles)	ENERGY DENSITY (Wh/lb)
ZINC-AIR	30-37	120-148	60-75
ZINC-CHLORINE	17.5-20	70-80	35-45
ZINC-BROMINE	15.17.5	60-70	30-35
SODIUM-SULFUR	25-32.5	100-130	50-65
LITHIUM-IRON SULFIDE	15-17.5	60-70	30-35

oxygen evolution results in water loss and an electrolyte reservoir and watering system will have to be incorporated in the battery. Charge control methods will also present more of a problem than for zinc-oxygen.

Zinc-oxygen would be a maintenance-free system since oxygen evolved would be stored under pressure and utilized for the subsequent discharge. Storage of oxygen in a light-weight, reliable and inexpensive pressure container would be a significant engineering problem.

The long-range electrochemical improvements would focus on three major areas, 1) inexpensive bi-functional oxygen electrode, 2) stable separator development and 3) long-life zinc electrode development. Cell and battery development would parallel some of the electrochemical work proceeding from basic studies through electrode and material development to full-scale prototype and pilot line production of batteries. Significant progress can be achieved in each of these areas so that a vehicle-size zinc-oxygen (air) battery will be a reality in five to seven years.

Progress in the development of inexpensive bi-functional oxygen electrodes will be achieved by focusing on the use of extremely low concentrations of noble metal catalysts (less than 0.25 g/ft^2) specifically gold alloys or the use of perovskite and spinel type oxides as oxygen reduction/oxidation catalysts. Here the work would proceed initially with electrochemical studies followed by electrode structure development and then life testing.

Progress in the development of an improved zinc electrode will be achieved by focusing on means for reducing the solubility of the zinc electrode, selection of additives which provide stable nucleation sites for zinc and increase the crystallization overvoltage, and a study of charging methods to improve the uniformity of the zinc deposit. Coupled with cell and battery design, testing and engineering, we estimate that this in depth effort could be accomplished over a five-year period with an additional two years for building and testing full-size batteries in electric vehicles.

7.2 COSTS FOR ZINC-AIR

The cost of the final version will depend on the ultimate selection of either an open air system or a sealed oxygen system. Assuming that either version would ultimately use an inexpensive non-noble oxygen electrode, the key cost drivers reside in the trade-offs between a pressure shell container for the sealed version and electrolyte CO_2 scrubber/water management system for the air battery. Table 9 gives estimated volume production price estimates for the zinc-air system at a level of 1×10^6 vehicle batteries per year. The price of zinc metal was taken at 50¢/lb for this analysis. The projections indicate that materials for the zinc-air system would cost about $30.36/kWh.

The possible candiate batteries for electric vehicles are compared in Table 10, and the overall characteristics of the various schemes considered in this analysis are summarized in Table 11. An artist's conceptual design concept of an electric van employing the circulating system as the motive force is shown in Figure 9.

TABLE 9

VOLUME PRODUCTION PRICE ESTIMATES FOR $Zn-O_2$

AND Zn-AIR BATTERIES

(1×10^6 batteries/yr)

	Zn-Air $/kWh
ZINC METAL	*1.86
OXYGEN ELECTRODE	14.00
OTHER RAW MATERIALS	5.50
CELL & BATTERY HARDWARE	4.00
PRESSURE CONTAINER	-
ELECTROLYTE SCRUBBER-WATER MANAGEMENT	5.00
TOTAL MATERIALS	30.36

*Based on 60% Zn utilization @ 1.2V/cell, 3.75 lbs/kWh

TABLE 10

CANDIDATE ELECTRIC VEHICLE BATTERIES

Battery System	E_o	Theo. Wh/lb	Theo. Reactant Costs $/kWh	Practical Wh/lb	Energy % Efficiency	Cycle Life	Remarks
Pb-Acid	2.04	76	2.21	10-14	75	200-400	Poor energy density. Needs life improvements.
Ni-Cd	1.30	95.5	11.89	20-22	71	500+	Moderate energy density. Limited cadmium supply above 200,000 units/yr.
Ni-Fe	1.37	121.4	8.49	18-20	60	500+	Poor energy efficiency; high gasing; current unit high cost construction.
Ni-Zn	1.735	148	7.04	25-28	72	200	Needs life improvements.
Ni-H_2	1.318	171.3	8.22	20-25	62	500+	Poor volumetric energy density; hazardous H_2 storage.
Zn-Br	1.828	197.8	1.89	30-35	60		Complex, hazardous chemical.
Zn-Cl	2.122	305	.91	35-40	60		Complex, hazardous chemical.
Li/Al-FeS	1.33	209		30-35	65		High temperature operation; high cost in materials.
Na-S	2.01	315		50-65	65		"
Fe-Air	1.28	435	.63	40-60	50		Poor efficiency
Zn-O_2	1.65	492	.84	60-75	59		Needs life improvements.
Al-Air	2.75	1.972	.22	100	23		Requires complex mechanical recharge; very poor efficiency.

TABLE 11 : SYSTEM COMPARISON

SYSTEM TYPE	STACK WT. (lbs)	ENERGY (kWh)	CONTENT (Wh/lb)	NO. OF CYCLES	RANGE, URBAN (miles)	COST MATERIAL $/kWh	COST OPE'TG ¢/mile
REFUELABLE*	500	36	72	385	130	26.76*	3.0
RECHARGEABLE, CONVENTIONAL							
- open air	"	23	46	600	83	19.93	2.0
- sealed oxygen	"	25	50	550	91	22.83	1.7
RECHARGEABLE, CIRCULATING							
- electrolyte	"	23	46	600	83	28.26	1.7
- slurry on board charging	"	24	48	575	87	29.37	1.7
external charging	"	29	58	472	115	8.30**	-

* material cost = $23.48 if perovskite is used instead of gold

** excludes costs of recharging facilities

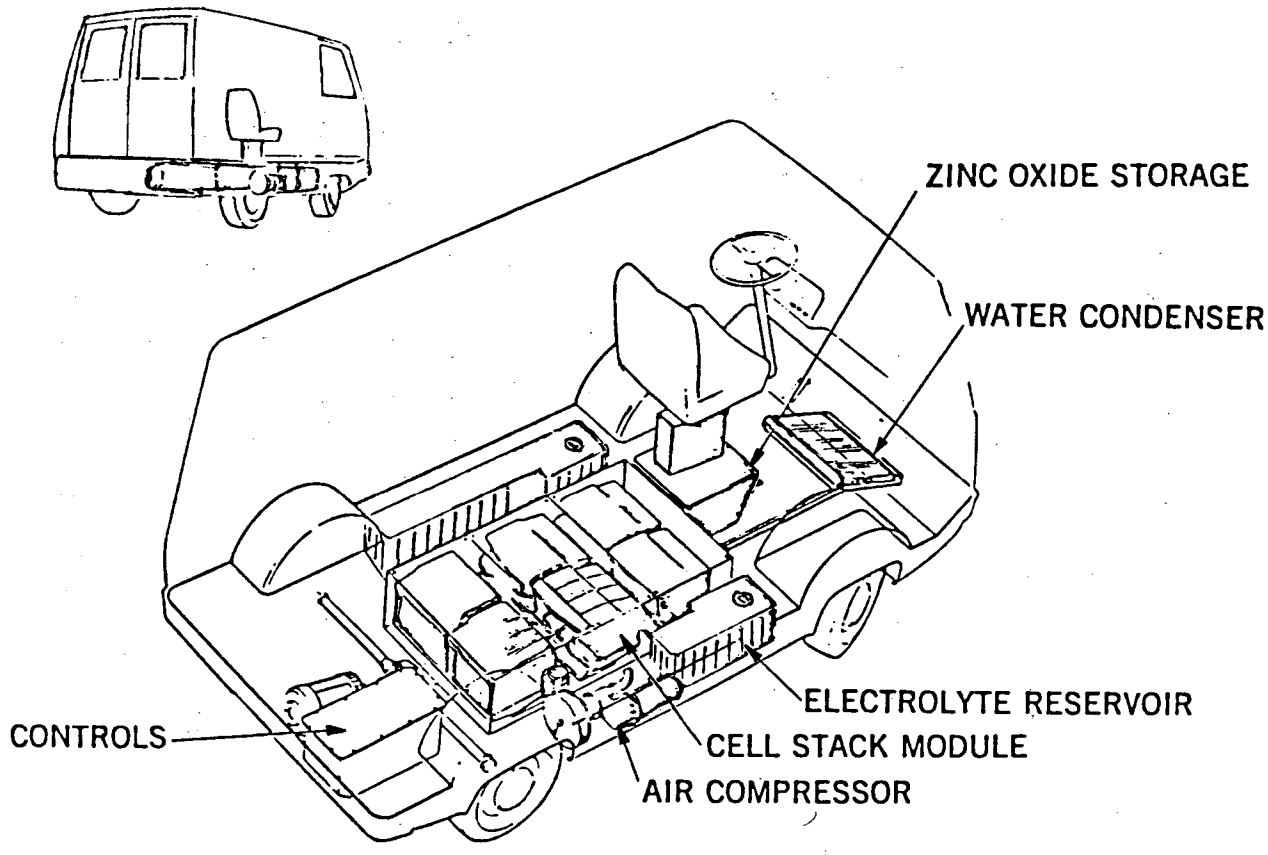

Zinc-air battery system in a delivery van.

FIGURE 9

(Reproduced from "Power Systems for Electric Vehicles", U.S. Dept. of HE&W, Public Health Service, Cincinnati, Ohio 1967) Publication No. 999-AP-37

8.0 ZINC-OXYGEN(AIR)-ERC's CHOICE FOR A LONG-RANGE EV BATTERY

Based on early successes with developing small zinc-oxygen batteries, on-going research in zinc electrode and separator technology, and oxygen electrode development as part of our fuel-cell development programs, ERC concludes that some version of zinc-air is the leading candidate for advanced electric vehicle propulsion. Projected improvements in the above areas will result in a battery capable of 60-75 Wh/lb with a life of 50,000 miles or more; nearly double the energy density of most of the "advanced" batteries presently being developed. An estiamte of five to seven years for research, development, and testing would bring the battery to production from the early to mid 1990's.

The calculations performed in this analysis were based on a weight of 500 lbs allocated to the battery system and 1,500 lbs to the vehicle. In addition, calculations were done on the basis of constant cost and constant energy, and other parameters were calculated for each operating scheme. The weight of the base vehicle was kept constant in all cases; the weight of the propulsion system, i.e. battery plus accessories, differed depending upon the basis for calculation and the type of system. The results are summaried in Table 12.

An examination of Table 12 shows that for constant system weight, the refuelable system gives the maximum range. However, this is achieved at an increased cost compared to the other types. Circulating slurry with external recharging is attractive since it gives a good range at a low cost. But the system is more

TABLE 12: SYSTEM PARAMETERS

SYSTEM TYPE	WT - lbs. SYSTEM Battery	WT - lbs. TOTAL Vehicle	ENERGY kWh	ENERGY Wh/lb	MATERIAL $	MATERIAL $/Kwh	RANGE Kwh/m	RANGE miles
A. CONSTANT SYSTEM WT = 500 lbs								
1.	500	2,000	36	72	1,404	39	.277	130
2.	500	2,000	25	50	571	23	.277	90
3.	500	2,000	23	46	650	28	.277	83
4.	500	2,000	24	48	705	29	.277	87
5.	500	2,000	29	58	492	17	.277	105
B. CONSTANT SYSTEM WT = 1000 lbs								
1.	1,000	2,500	72	72	2,808	39	.346	208
2.	1,000	2,500	50	50	1,142	23	.346	145
3.	1,000	2,500	46	46	1,300	28	.346	133
4.	1,000	2,500	48	48	1,410	29	.346	139
5.	1,000	2,500	58	58	984	17	.346	168
C. CONSTANT COST = $ 2,000								
1.	712	2,212	51	72	2,000	39	.306	167
2.	1,751	3,251	88	50	2,000	23	.450	196
3.	1,538	3,038	71	46	2,000	28	.421	169
4.	1,418	2,918	68	48	2,000	29	.404	168
5.	2,033	3,533	118	58	2,000	17	.489	241
D. CONSTANT ENERGY = 60 Kwh								
1.	833	2,572	60	72	3,010	39	.356	169
2.	1,208	2,708	60	50	1,380	23	.375	160
3.	1,292	2,792	60	46	1,680	28	.387	155
4.	1,234	2,734	60	48	1,740	29	.379	158
5.	1,037	2,537	60	58	1,020	17	.351	171

NOTE: Wt. of vehicle without power system = 1,500 lbs.

SYSTEM TYPE:
1. Mechanically Refuelable
2. Electrically Rechargeable, sealed O_2
3. Circulating Electrolyte
4. Circulating Slurry, on-board electrolysis
5. Circulating Slurry, external regeneration

complex and in addition facilities for recharging externally need to be established at reasonable cost and convenience -- factors which do not appear viable in the near future. Accordingly, these two systems are not considered feasible at this time.

Among the remaining three alternatives, the electrically rechargeable system offers the best range at minimal cost. Furthermore, it has the advantage of simplicity and is expected to result in the least user resistance to long acquired driving habits. While recognizing problems associated with the cycling of the zinc electrode, they are expected to be minimal since no overcharge would be required in the zinc-air battery.

Research efforts directed towards the development of bi-functional oxygen electrodes are showing good promise. It is reasonable to expect that in the near future a low cost, long life bi-functional electrode that has the required electro-chemical characteristics will become feasible. This would provide the impetus for considering the electrically re-chargeable battery as the power source for propulsion of electric vehicles.

It is ERC's contention therefore, that a zinc-air battery system designed to be rechargeable electrically by conventional techniques would prove to be the optimum choice for use in electric vehicles.

9.0 SUMMARY AND CONCLUSIONS

From the analysis presented in this report, it is clear that the zinc-air battery for electric vehicles offers a variety of operating alternatives compared to the other batteries. Each of the operating schemes has its own distinct merits and demerits; accordingly, the final choice would be dependent upon factors such as type of driving, range and speed, ease of charging, system problems and cost.

The five different systems examined are all intended to operate primarily in an urban environment. Depending on the system and basis of design, the estimated range of operation varies between 83 and 241 miles.

Even assuming a significant market penetration of 10%, electric vehicles of the future will be required to compete in a world dominated by internal combustion engines. It is imperative therefore, that energy and power densities be improved, current limitations must be overcome and efficiency of motor/controller/drive train systems be improved.

Despite the basic limitations inherent in battery systems, significant improvements in energy densities have been accomplished in recent years. Based on this, it is felt that practical energy densities in excess of 75 Wh/lb are achievable with zinc-air batteries. However, in order to reach this goal, more research and development efforts need to be expended on electrochemical research and systems management.

This report was done with support from the Department of Energy. Any conclusions or opinions expressed in this report represent solely those of the author(s) and not necessarily those of The Regents of the University of California, the Lawrence Berkeley Laboratory or the Department of Energy.

Reference to a company or product name does not imply approval or recommendation of the product by the University of California or the U.S. Department of Energy to the exclusion of others that may be suitable.

LAWRENCE BERKELEY LABORATORY
TECHNICAL INFORMATION DEPARTMENT
UNIVERSITY OF CALIFORNIA
BERKELEY, CALIFORNIA 94720