LBL-22664 c.2

Lawrence Berkeley Laboratory
UNIVERSITY OF CALIFORNIA

APPLIED SCIENCE DIVISION

RECEIVED
FEB 20 1987
DOCUMENTS SECTION

DEVELOPMENT OF A PROCESS FOR SIMULTANEOUS DESULFURICATION, DRYING, AND RECOVERY OF NATURAL GAS LIQUIDS FROM NATURAL GAS STREAMS

S.F. Sciamanna* and S. Lynn
(*Ph.D. Thesis)

October 1986

TWO-WEEK LOAN COPY
This is a Library Circulating Copy which may be borrowed for two weeks.

APPLIED SCIENCE DIVISION

LBL-22664 c.2

Prepared for the U.S. Department of Energy under Contract DE-AC03-76SF00098

DISCLAIMER

This document was prepared as an account of work sponsored by the United States Government. While this document is believed to contain correct information, neither the United States Government nor any agency thereof, nor the Regents of the University of California, nor any of their employees, makes any warranty, express or implied, or assumes any legal responsibility for the accuracy, completeness, or usefulness of any information, apparatus, product, or process disclosed, or represents that its use would not infringe privately owned rights. Reference herein to any specific commercial product, process, or service by its trade name, trademark, manufacturer, or otherwise, does not necessarily constitute or imply its endorsement, recommendation, or favoring by the United States Government or any agency thereof, or the Regents of the University of California. The views and opinions of authors expressed herein do not necessarily state or reflect those of the United States Government or any agency thereof or the Regents of the University of California.

LBL-22664

DEVELOPMENT OF A PROCESS FOR SIMULTANEOUS DESULFURIZATION, DRYING, AND RECOVERY OF NATURAL GAS LIQUIDS FROM NATURAL GAS STREAMS

by

Steven F. Sciamanna and Scott Lynn

October 1986

Applied Science Division
Lawrence Berkeley Laboratory
University of California
Berkeley, California 94720

This work was supported by the Morgantown Energy Technology Center, Assistant Secretary for Fosssil Energy, Office of Coal Utilization, Advanced Research and Technology Development, Division of Surface Coal Gasification, through the U.S. Department of Energy under contract number DE-AC03-76SF00098.

Development of a Process for Simultaneous Desulfurization, Drying, and Recovery of Natural Gas Liquids from Natural Gas Streams

Steven Francis Sciamanna

Abstract

In general, raw natural gas is a mixture of hydrocarbon gases that may also contain sulfur compounds, water and a small amount of inert gases. Conventional natural gas processing schemes are based on the sequential removal of sulfur compounds, water and hydrocarbon liquids. Each processing step requires a different process. The processing scheme proposed here removes all three in a single absorption step and is an integrated arrangement based on the University of California, Berkeley Sulfur Recovery Process (UCBSRP) technology. This processing scheme promises both reduced capital and operating costs. High purity sulfur product and natural gas liquids are produced and all exit streams contain less than 1 ppm of either hydrogen sulfide or sulfur dioxide.

The UCBSRP technology is based on absorption of hydrogen sulfide and sulfur dioxide by a polar organic solvent. Certain classes of polyglycol ethers are suitable solvents for hydrogen sulfide, sulfur dioxide and light hydrocarbon gases. These solvents are also miscible with water. Hydrogen sulfide reacts with sulfur dioxide (generated by burning sulfur) in the liquid phase to form elemental sulfur and water. Sulfur is partially miscible in the solvent. Information on the solubility of hydrocarbon and acid gases is required for these organic solvents. Furthermore, knowing the solubility of elemental sulfur in these solvents is also necessary. The experimental portion of this work is concerned with the measurement of these solubilities as a function of temperature, solvent composition and water content. Solubility data were collected for hydrogen sulfide, sulfur dioxide, carbon dioxide, propane, and butane in a variety of mono- and diethers of polyethylene glycol. Solubility data for sulfur in these solvents were also collected. Correlations were developed for both gas and sulfur solubilities.

Acknowledgements

My motivation, four years ago, for taking a leave-of-absence from a comfortable job and exchanging it for a lifestyle without nights or weekends was twofold. First, to have the opportunity to research a particular subject in detail and second, to have fun doing so. Now, the addition of three more letters after my name only signifies that I accomplished a personal goal, nothing else.

While in the Chemical Engineering Department here at Berkeley, it has been my good fortune to have the opportunity to work with Dr. Scott Lynn. His patience, availability, and good humor are greatly appreciated. I have learned a great deal from Dr. Lynn and his creative approach to chemical process synthesis.

I have made many friends in the department. In particular my labmates, past and present, known as the 205 Gilman Association. Most notably in this august body are Dan Neumann, Craig Stevens, Marshall Hix, David Weingaertner and Tom Colson with whom I have shared many enjoyable experiences. A special thanks to my friend and computer-guru Dan Neumann. Thanks are also owed to Charlie Hultgren, Pete Lynn and Brian Tobey for their assistance in the sulfur solubility work.

My wanderings through the U.C. system would have certainly been more confusing were it not for invaluable assistance and counsel from Kay Ekman.

Thanks to Dr. John Prausnitz for the opportunity to discuss molecular thermodynamics and dabble in the occult (i.e. thermodynamics of ultrapure systems).

I have received immeasurable support from my family and friends. They have always expressed sincere interest in my academic endeavors, even when the

subject matter was slightly obtuse. My father and mentor, Aldo Sciamanna, deserves a special heart-felt thanks for introducing me to the field of chemical engineering. If it was not for his generous support, wealth of expertise and practical insights I surely would not have made it this far.

Every achievement has at least two persons involved; the first person is the pursurer of the goal, and the other(s) to keep the former moving in the right direction. I am fortunate to have had access to an infinite supply of enthusiasm, ideas, moral support and love from my wife and best friend Sandy. She has always been with me at the front-lines and I am forever in her debt.

A special thanks is owed to my friends Sam Davis and Dave Rogge of Chevron U.S.A. Inc., Western Region Production Department, for convincing Chevron management to provide initial funding for this work, for somehow maintaining my leave-of-absence and for throwing some part-time work my way.

This work was supported in part by the Morgantown Energy Technology Center, Assistant Secretary for Fossil Energy, Office of Coal Utilization, Advanced Research and Technology Development, Division of Surface Coal Gasification, through the Department of Energy under contract DE-AC03-76SF00098.

TABLE OF CONTENTS

Abstract 1

Acknowledgements i

CHAPTER 1: Introduction 1

1.1 Why Treat Natural Gas? 1

1.2 Conventional Natural Gas Processing 1
- 1.2.1 *Desulfurization* 1
- 1.2.2 *Dehydration* 3
- 1.2.3 *Hydrocarbon Recovery* 3
- 1.2.4 *Limitations* 4

1.3 UCBSRP: New Approach 5

1.4 Objectives 6
- 1.4.1 **UCBSRP** *Project* 6
- 1.4.2 *Dissertation* 6

CHAPTER 2: Sulfur Solubility 10

2.1 Preface 10

2.2 Theory 11
- 2.2.1 *Solid-Liquid Equilibria* 11
- 2.2.2 *Liquid-Liquid Equilibria* 12

2.3 Experimental Apparatus 13

2.4 Binary and Pseudo-Binary Systems 13
- 2.4.1 *Experimental Method* 14
- 2.4.2 *Pure Organic Solvents* 15
  - **Results and Discussion** 15
  - A. *Model Catalyst Compounds* 15
  - B. *Monoethers* 16
  - C. *Glymes* 16
  - D. *Glycol* 17
  - E. *Summary* 17
- 2.4.3 *Effect of Water* 17
- 2.4.4 *Mixed Organic Solvents* 18
- 2.4.5 *Solvent Solubility in Sulfur* 18

2.5 Ternary System 19
- 2.5.1 *Experimental Method* 20
- 2.5.2 *Results and Discussion* 24

2.6 Summary 24

CHAPTER 3: **Light Gas Solubility** 40

3.1 **Preface** 40

3.2 **Theory** 40
3.2.1 *Gas Solubility in Pure Solvents* 40
3.2.2 *The Effect of Temperature on Gas Solubility* 42
3.2.3 *Gas Solubility in Mixed Solvents* 43

3.3 **Experimental Apparatus** 44
3.3.1 *Approach* 44
3.3.2 *Equilibrium Cell* 45
3.3.3 *Gas Addition System* 46
3.3.4 *Data Acquisition & Control Hardware* 48
3.3.5 *Measurement Accuracy* 49

3.4 **Experimental Method** 51
3.4.1 *Solvent Preparation* 51
3.4.2 *Start-up* 52
3.4.3 *Run Procedure* 53
3.4.4 *Shut-down* 54
3.4.5 *Control Algorithm* 54
3.4.6 *Reproducibility & Limitations* 55

3.5 **Pure Gases and Solvents** 56
3.5.1 *Results* 56
3.5.2 *Data Analysis* 56
3.5.3 *Correlated Results* 59
3.5.4 *Discussion* 59

3.6 **Effect of Water** 61
3.6.1 *Procedure* 61
3.6.2 *Results & Data Analysis* 63
3.6.3 *Discussion* 63

3.7 **Literature Comparison** 64

3.8 **Correlation of Sulfur Dioxide Data** 65

3.9 **Summary** 66

CHAPTER 4: **Process Synthesis** 87

4.1 **Preface** 87

4.2 **Design Basis** 88

4.3 **Solvent & Catalyst Selection** 88

4.4 **Process Description** 89

4.4.1 *Sour Condensate Separation* 89
4.4.2 *Primary Absorber* 90
4.4.3 *Reactor/Crystallizer & Settler* 90
4.4.4 *Solvent Recycle* 91
4.4.5 *Sulfur Separation* 91
4.4.6 *Solvent & Sour-Water Stripper* 92
4.4.7 *Depropanizer* 92
4.4.8 *Secondary Absorber/Reactor* 93
4.4.9 *Furnace & SO_2 Absorber* 93

4.5 **Process Utilities** 94

4.6 **Process Control** 94

4.7 **Summary** 96

References 106

Appendix A 108

A.1 **Determination of Sulfur Solubility Near or Below Room Temperature** 109
A.2 **Ternary Coordinate Transformation** 110
A.3 **Experimental Data: Sulfur Solubility in Pure and Mixed Solvents** 113
A.4 **Experimental Data: Model Ternary System** 122

Appendix B 123

B.1 **Derivation of Temperature Dependence of Henry's Law** 124
B.2 **Vapor-Space Hold-Up Estimate** 126
B.3 **Equipment Specifications** 128
B.4 **Control Program Input Data (Sample)** 131
B.5 **Experiment Control Program** 132
B.6 **Control Program Run-Time Output (Sample)** 144
B.7 **Output Data File (Sample)** 155
B.8 **Data Regression and Correlation Program (CRUNCH.F77)** 159

Appendix C 170

C.1 **Simulation Flow Diagram** 171
C.2 **Operations Specifications Summary** 180
C.3 **Detailed Stream Data** 202
C.4 **Column Profiles** 205

CHAPTER 1
INTRODUCTION

1.1 WHY TREAT NATURAL GAS?

Raw natural gas is, in general, a mixture of hydrocarbon gases that may contain sulfur compounds, certain inert gases and water. This gas must be treated before sending it to a sales-gas pipeline. Propane and heavier hydrocarbons are removed both to limit the heating value of the gas and to recover these components as separate products (depending on the current market). Excess inerts such as carbon dioxide or nitrogen affect the flammability of the gas. The presence of water can cause gas hydrate formation or, upon condensation, can promote corrosion in the presence of carbon dioxide. Sulfur-containing compounds, such as hydrogen sulfide, carbonyl sulfide, and mercaptans, are lowered to trace levels because of their toxicity and odor. A typical sales-gas pipeline specification is given in Table 1-1.

1.2 CONVENTIONAL NATURAL GAS PROCESSING

The conventional approach to natural gas processing is the sequential removal of each component of interest, using a different process for each. A typical scheme is shown in Figure 1-1.

1.2.1 Desulfurization

The optimum desulfurization process for a particular application depends upon the amounts of hydrogen sulfide and carbon dioxide present in the gas stream. An ethanolamine-based absorption process is commonly used. In water, ethanolamines (10-30 wt%) are weak organic bases. This mixture acts as a "chemical" solvent and reacts with dissolved acidic solutes such as hydrogen sulfide and carbon dioxide. Equilibrium is shifted at elevated temperatures which allows the solvent to be regenerated. Primary ethanolamines are the most basic

and tertiary are the least. Although hydrogen sulfide and carbon dioxide are both acid gases and react with ethanolamine solvents, the reaction mechanisms are different (Savage et al., 1986). Some selectivity between hydrogen sulfide and carbon dioxide is possible with tertiary ethanolamines. Selectivity is normally desired since the hydrogen sulfide specification is quite low (< 1ppm) while the specification for CO_2 at ~5% is much higher. As long as the acid off-gas from the ethanolamine process is combustible, this stream can serve as the feed to a conventional Claus sulfur plant.

The Claus process (Kohl and Riesenfeld, 1979) is based upon the Claus reaction shown below.

$$2\ H_2S + SO_2 \longleftrightarrow 3/x\ S_x + 2\ H_2O$$

Hydrogen sulfide and sulfur dioxide react in the gas phase at high temperature to form gaseous elemental sulfur and water. The reaction is accelerated over an alumina catalyst and the extent of reaction is limited by equilibrium. Increasd sulfur conversion is accomplished by multiple catalyst beds with intermediate sulfur condensation and separation. Sulfur dioxide is generated by partial combustion of the acid gas stream. Exact stoichiometric control in the furnace is to avoid having the excess sulfur dioxide or hydrogen sulfide leave the Claus process unconverted. The control difficulties and equilibrium limitations in the Claus process necessitate treating the tail gas to remove unreacted hydrogen sulfide and sulfur dioxide. If the tail-gas stream is small, a non-regenerable caustic scrub is sometimes the most cost-effective treatment; otherwise, a regenerable process is necessary. Examples of regenerable processes are the Wellman-Lord, SCOT, and the Beavon-Stretford processes. In the Wellman-Lord process residual hydrogen sulfide is combusted to sulfur dioxide. Sulfur dioxide is then separated from the tail gas stream in an absorber-stripper operation and recycled to the Claus process. In the SCOT process residual sulfur dioxide is hydrogenated to hydrogen sulfide. Hydrogen sulfide is separated from the tail gas

stream in an absorber-stripper operation circulating an ethanolamine solvent. The acid off-gas is recycled to the Claus furnace. In the Beavon-Stretford process residual sulfur dioxide is hydrogenated to hydrogen sulfide. The tail gas stream containing hydrogen sulfide is absorbed into the Stretford liquor, where the complex Stretford reactions occur forming elemental sulfur and water. Refer to Kohl and Reisenfeld (1979) for a detailed description of these processes. Usually, the tail gas process requires as much or more capital than the Claus process.

1.2.2 Dehydration

Since the ethanolamine solvent contains water, dehydration of the gas precedes hydrocarbon removal because of potential gas-hydrate formation when the gas is cooled. Gas dehydration is accomplished with a glycol-type absorption solvent. Di- or triethylene glycol are the most common glycols used for gas dehydration. Solvent vapor pressure, viscosity and hydrocarbon solubility in the solvent are the important considerations in solvent selection. The water content of the dried gas is set either by the pipeline specification or by the type of process used for hydrocarbon removal. The solvent is regenerated by heating. If the gas is dried to very low water content, the solvent is stripped with a dry, inert stripping gas. The stripping gas is necessary to avoid high temperatures in the reboiler of the solvent stripper.

1.2.3 Hydrocarbon Recovery

The two common methods of hydrocarbon recovery are absorption and/or refrigeration. In the case of absorption, a heavy hydrocarbon oil is contacted with the hydrocarbon-rich natural gas stream. The absorbed propane and heavier hydrocarbons are rejected at low pressure in a stripping operation. The recovery of propane and heavier hydrocarbons is typically 85-95 %. For this process, meeting the water-content specification of the pipeline gas precludes gas-hydrate formation. If the absorption oil is refrigerated, the water content of the gas must

be lower.

The other common means of hydrocarbon recovery is refrigeration and condensation in a Low Temperature Separation (LTS) operation. The water content of the natural gas stream must be reduced to very low levels to avoid gas-hydrate formation. Propane and higher carbon number recovery is about 60-70%.

1.2.4 Limitations

The conventional natural gas conditioning scheme has several shortcomings associated with it. Each of the gas separations utilizes a circulating solvent in an absorber-stripper operation. There is a substantial amount of capital expense caused by the duplication of equipment in this approach. Selective ethanolamine solvents are necessary when the carbon dioxide content of the natural gas is high enough to generate a non-combustible off-gas from the ethanolamine stripper. These selective ethanolamine solvents are less basic and require higher circulation rates. An example of a selective ethanolamine process is Exxon's FLEXSORB process. Since the Claus process is equilibrium-limited, the tail gas always contains residual hydrogen sulfide and sulfur dioxide. The tail gas process removes these residual components from a low pressure gas stream and is expensive in both capital and operation. As an example consider the Beavon-Stretford process, which hydrogenates residual sulfur dioxide to hydrogen sulfide (Beavon unit) and converts the hydrogen sulfide to elemental sulfur (Stretford process). The Stretford process forms sulfur from an aqueous-based scrubbing solution. Since sulfur has very low solubility in water, low quality, collodial sulfur is produced. The sulfur is floated to the top of the solution by air sparging and then skimmed off the top. The sulfur slurry is then filtered or centrifuged to produce a sulfur cake. This sulfur separation step is difficult to operate and is a serious limitation of the Stretford process.

1.3 UCBSRP: NEW APPROACH

Common to each gas separation in the conventional processing scheme is an absorber-stripper operation with a circulating solvent. Since each of these steps uses a different solvent but similar equipment, it is worthwhile to consider integrating them into one process. The UCBSRP has only one absorption step in which the solvent contacts the natural gas stream to remove all of these components. Furthermore, by reacting the hydrogen sulfide to sulfur in a liquid-phase reaction, the need for the Claus process and tail gas plant is eliminated. A substantial capital saving and reduced operating expenses are possible.

The oxidation of hydrogen sulfide to elemental sulfur using sulfur dioxide is the well-known Claus reaction. Obtaining complete reaction is favored by having as low a temperature as possible while still maintaining an acceptable reaction rate. When this reaction is carried out in the gas phase (as in the Claus process) the minimum temperature is set by the dewpoint of sulfur. Reaction can be further enhanced by reacting at a lower temperature, in a liquid phase below the sulfur dewpoint, and by using a suitable catalyst to maintain the reaction rate. This approach has been used in the Townsend process (Townsend, 1965) and the IFP process (Renault, 1969). The Townsend process uses a polyglycol solvent with water as a catalyst while the IFP process uses a polyglycol ether solvent with an undisclosed catalyst. These processes have not found wide spread application because of their inability to meet stringent outlet specifications and air quality standards.

The University of California, Berkeley, Sulfur Recovery Process (UCBSRP) is similar to the Townsend process but has a superior catalyst and processing scheme. The kinetics of this reaction in the presence of a homogenous liquid phase catalyst has been studied by Neumann (1986). The reaction is first-order in both hydrogen sulfide and sulfur dioxide and depends on the concentration of the homogenous liquid-phase catalyst. Substituted tertiary aromatic amines, such as

N,N-dimethylaniline (DMA), and heterocyclic nitrogen compounds, such as 3-pyridylcarbinol, are catalysts for this reaction. The heterocyclic compounds are more effective catalysts than are the tertiary amine compounds.

Some novel aspects of the UCBSRP are: First, the process configuration allows maintaining exact overall stoichiometry between hydrogen sulfide and sulfur dioxide while maintaining an excess of one reactant or the other in each reaction zone. This scheme is necessary since the reaction is first-order in both reactants. An excess of one reactant is needed to maintain the fast reaction rate needed for complete annilation of the limiting reactant. Second, the option of carrying out a portion of the reaction in the main absorber provides the driving force needed to reduce the hydrogen sulfide content of the treated gas stream to < 1 ppm.

1.4 OBJECTIVES

1.4.1 UCBSRP

The objectives of the UCBSRP project are to collect the reaction-rate and physical-property data needed to design the process and to perform a competent evaluation of it. The project scope is summarized as follows:

1. *Solvent Selection*
   a. *Sulfur/Solvent Equilibria*
   b. *Gas/Solvent Equilibria*
   c. *Water/Solvent Equilibria*
   d. *Materials Compatibility*
2. *Catalyst Selection*
3. *Parameters Controlling Crystal Size*
4. *Parameters Controlling Reactive Absorption*
5. *Computer Modelling and Process Development*
6. *Cost Comparison with Conventional Technology*

1.4.2 Dissertation

The experimental portion of this dissertation is limited to sulfur/solvent and gas/solvent equilibria measurement and correlation. The goal of this work is the process synthesis and evaluation of the UCBSRP technology applied to natural gas treatment.

List of Tables

1-1 Typical Sales Gas Specifications

List of Figures

1-1 Conventional Natural Gas Processing Scheme

Table 1-1

TYPICAL SALES GAS SPECIFICATIONS

Pressure
Set by sales pipeline pressure. Typical value = 750 psig.

Temperature
Lower limit: Prevent condensation with gas already in the pipeline.
Upper Limit: Avoid materials damage (i.e. melt plastic coatings etc.).

Water
Content: 7 lbs/MMSCF (147 ppm)

Hydrocarbon
Dewpoint (for California): 40 ^{o}F at pipeline pressure.
Higher Heating Value: 1000-1220 BTU/MSCF

Inerts
Total Inerts: 6%
Carbon Dioxide: 5%

Sulfur
Hydrogen Sulfide: < 4 ppm (0.25 grain/100 SCF).
Total Sulfur: < 8 ppm (0.5 grain/ 100 SCF).

FIGURE 1–1

Conventional Natural Gas Processing Scheme

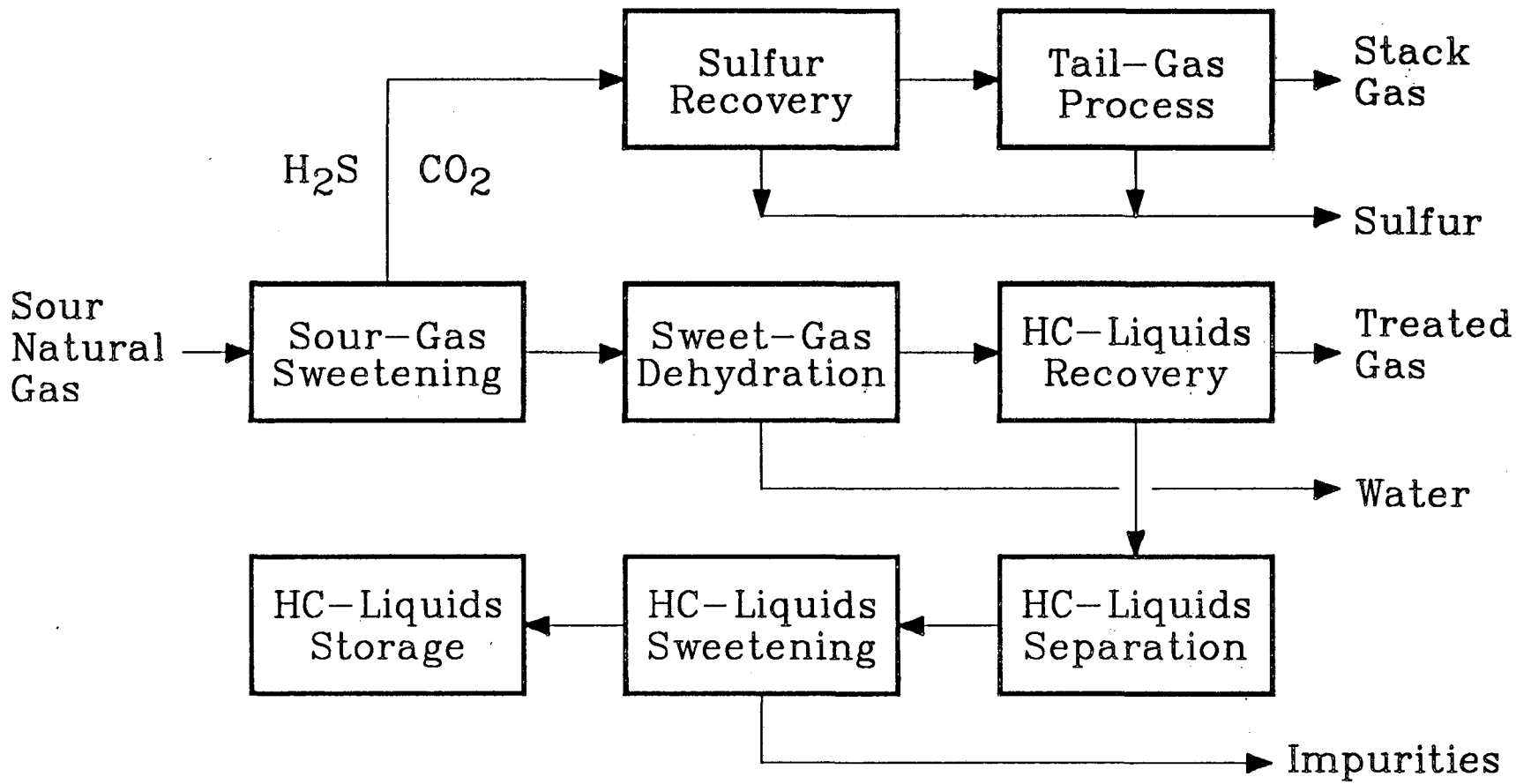

CHAPTER 2
SULFUR SOLUBILITY

2.1 PREFACE

The production of elemental sulfur by a liquid-phase reaction is at the heart of the University of California, Berkeley, Sulfur Recovery Process (UCBSRP). Information on the physical interactions of sulfur and the process solvent is necessary in deciding how to handle sulfur in the process. For instance, if sulfur is insoluble in the process solvent, unwanted precipitation of sulfur may occur in less-than-suitable points in the process. Furthermore, if the sulfur-solvent separation is accomplished by melting and decanting, data on solvent solubility in sulfur is necessary for estimating potential solvent losses. On the other hand, if sulfur is sufficiently soluble in the process solvent, then sulfur crystallization can be controlled in a suitable processing scheme. Thus, information on the temperature-dependence of sulfur solubility in the process solvent is required to establish a feasible design.

The solvent of choice preferably exhibits good sulfur solubility at higher temperatures (60-100 ^{o}C) and that solubility should decrease markedly at lower temperatures (20-40 ^{o}C). This property is weighed with the other desired properties of a good process solvent (e.g. gas solubility, low vapor pressure, etc.) in making the final choice of solvent. Also, information on interactions of the dissolved catalyst compound with sulfur are necessary since losses of this component are undesirable. The experimental program was designed to establish a basis for solvent selection with respect to sulfur solubility. The experimental work is divided into five areas.

1. *Sulfur solubility in pure organic solvents.*
2. *The effect of water on sulfur solubility.*
3. *Sulfur solubility in mixed organic solvents.*
4. *Solvent solubility in sulfur.*
5. *A typical ternary system.*

The solvents tested in each area are discussed at the beginning of each section. All of the experimental data are given in Appendix A.3.

2.2 THEORY

The thermodynamic framework for describing solid-liquid and liquid-liquid equilibria is well known. Only the results are presented here. Refer to Prausnitz (1969) and Scott (1965) for a detailed treatment of the development of these theories. The purpose of this section is to establish a framework for correlating experimental data.

2.2.1 SOLID-LIQUID EQUILIBRIA

The solubility of a solid solute in a liquid solvent is mathematically described by:

$$\ln x_s = (-\Delta S_f/R)[T_m/T - 1] - \ln \gamma_s \qquad (2\text{-}1)$$

Where:

x_s = Mole fraction of solute

ΔS_f = Entropy of fusion of the solute at T_m $(= \Delta H_f/T_m)$

T_m = Melting point temperature of the solute

γ_s = Activity coefficient of the solute

Three approximations are made in the derivation of this equation. First, the triple-point temperature (T_t) is replaced by the melting-point temperature (T_m) since for most substances there is little difference between them. Second, the terms containing the difference in heat capacity between the solute as a solid and as a hypothetical liquid are small relative to the latent heat effect. Third, the heat of fusion is assumed to be independent of temperature. The heat of fusion of rhombic crystalline sulfur is 11.9 cal/gm (Kirk and Othmer, 1954). The melting

point of rhombic sulfur is 112.8 ^{o}C. In the case of ideal solubility of the solute in the solvent, the activity coefficient for the solute is equal to unity. This implies that a plot of ln x_s vs. T_m/T would yield a straight line with a slope of $-\hat{}S_f/R$. It also necessitates that the solute and solvent be completely miscible at the melting point of the solute. Non-ideal behavior requires a method for predicting activity coefficients of solid solutes in liquid solvents. Prausnitz (1969) suggests that a reasonable estimate can be made with the Scatchard-Hildebrand relation and regular-solution theory. The determination of activity coefficients by this method requires thermodynamic information on the solvent and the solute as a hypothetical sub-cooled liquid. However, an empirical correlation of sulfur solubility with temperature is adequate for the purposes of this work and therefore no further analysis is necessary.

Since the organic solvents tested in this study have very different molecular weights, weight fractions rather than mole fractions of dissolved sulfur have been correlated with the inverse absolute temperature of the solution, normalized with the absolute temperature of the melting point of sulfur. If, at the melting point of the solute, the solvent and solute are not miscible then two liquid phases are formed. Above this temperature, liquid solute, rather than solid solute, is in equilibrium with the solvent.

2.2.2 LIQUID-LIQUID EQUILIBRIUM

The mathematical description of liquid-liquid phase equilibrium (LLE) is a complex problem since mutual distribution of each liquid component can occur. The purpose of the experimental portion of this work is to measure the solubility limit of sulfur in various solvents over the temperature range of interest. To correlate LLE data within a fundamental framework capable of predictive behavior, requires that the composition of each phase be known. Unfortunately, the determination of the composition of the sulfur-rich liquid phase was not

within the scope of this work. It is interesting to note that if the activity coefficent is based on the two-suffix Margules equation then it is possible to fit the single adjustable parameter with solubility-limit data. However, this model predicts identical mutual solubilities of the two liquids in each other. This does not hold for sulfur and the various solvents of interest. For the purposes of correlating the data above the melting point of sulfur, the solubility is expressed as $\ln w_s = A*(T_m/T) + B$, where w_s is the weight percent of sulfur and A and B are fitted parameters.

2.3 EXPERIMENTAL APPARATUS

The experimental apparatus was extremely simple in construction. Refer to Figure 2-1 for a schematic of the equipment. The main piece of equipment was a combination hotplate and magnetic stirrer modified to include a shut-off relay for regulating the hotplate temperature. The temperature sensor was an on-off type mercury thermoregulator. The heating bath consisted of a 400 ml beaker filled with clear mineral oil and a stirring bar. A 2x15 cm test tube containing a small magnetic stirring bar served as the sample holder. A thermometer of appropriate range was used to monitor the temperature inside the test tube. Various clamps and a ringstand were used to suspend the necessary equipment. The mercury thermoregulator was immersed in the oil bath, which was placed atop the hotplate/stirrer. The test tube containing the sulfur/solvent sample and the small stirring bar was suspended directly above the larger stirring bar in the mineral oil bath. The magnetic coupling between the two stirring bars was sufficient to cause mixing of the sulfur/solvent sample when the magnetic stirrer was turned on.

2.4 BINARY & PSEUDO-BINARY SYSTEMS

The binary systems in this investigation were sulfur and pure organic solvents. The pseudo-binary classification refers to the solubility of sulfur in a mixture of

solvents. Two studies were conducted under the heading of pseudo-binary solvents: sulfur solubility in organic solvent-water mixtures and in mixtures of organic solvents. Each of these studies are discussed separately.

2.4.1 EXPERIMENTAL METHOD

An amount of sulfur was added to a pre-weighed test tube containing the small stirring bar. The mass of sulfur added was determined from the weight difference. Solvent was added to give a total combined mass (solvent plus sulfur) of about 13 grams. This volume of mixture insured adequate coverage of the thermometer bulb. Initially, the sample was heated until all of the sulfur had dissolved and then the solution was cooled until the sulfur recrystallized. The dissolution temperature required was as high as 150 ^{o}C, depending upon the particular solvent and the amount of sulfur present. If the temperature exceeded about 165 ^{o}C, the undissolved molten sulfur converted to the amorphous state and was insoluble at any temperature. This initial heating and recrystallization step was found to be necessary because the crystalline form of the reagent grade (sublimed) sulfur dissolved very slowly. The recrystallized sulfur dissolved much more rapidly and at a much lower temperature. A melting point determination indicated the reagent sulfur is in the form of monoclinic crystals whereas the recrystallized material is rhombic sulfur.

The solubility of sulfur in the solvent was found by slowly heating (1 ^{o}C/min or less) the oil bath and immersed test tube while both are being stirred. The temperature at which the last bit of sulfur dissolved was taken as the solubility temperature for that concentration of sulfur in the solvent. The crucial part of this procedure is to heat the system at a very slow rate as the last small amount of sulfur is dissolving. Unfortunately, this temperature cannot be checked by cooling because the sulfur will supersaturate in the solvent. However, with care this technique is reproducible to within 1 ^{o}C. This technique is limited to

solubility measurements above room temperature (refer to **Appendix A.1** for sub-room temperature analysis) but less than 150 ^{o}C. Amounts of sulfur less than 0.25 wt% are too difficult to see and above 90 wt% sulfur there is not enough liquid present to effectively mix the sample. Also, in the case of mixed solvents with the possibility of phase splitting, the minor phase may float rather than sink. This makes it difficult to tell when only a single phase is present.

2.4.2 PURE ORGANIC SOLVENTS

The solubility of sulfur in a variety of organic solvents was studied. These compounds are divided into four general classifications. They are: mono- and di-ethers of n-ethylene (or propylene) glycol (where "n" refers to di, tri, etc.), ethylene glycol, and various nitrogen-containing compounds. The mono-ethers are products of the Dow Chemical Co. and part of their "Dowanol" family of solvents. The mono-ethers solvents tested had varying substituent terminal groups as well as different numbers of ether linkages. A homologous series of di-ethers, or glymes, was studied to determine the effect of the number of ether linkages. One glycol compound was studied to determine the effect of substituent hydroxyl groups. Finally, the sulfur solubility in two types of nitrogen-containing model catalyst compounds was studied. The first type is a tertiary aromatic amine and the second is a heterocyclic nitrogen compound. The compounds that were studied and their abbreviations are listed in Table 2-1.

RESULTS AND DISCUSSION

A. Model Catalyst Compounds

Figure 2-2 is a plot of sulfur solubility in N,N-dimethylaniline (DMA) and in quinoline. Solubility is expressed as mole fraction of sulfur where sulfur in solution is assumed to exist as an eight-membered ring. Also shown is the ideal solution solubility curve and the data of Hammick and Holt (1926) for sulfur-

quinoline solubility. Sulfur has similiar solubility characteristics in DMA and quinoline and both are totally miscible with sulfur above its melting point. The data of Hammick agree quite well with the results of this study but he found slightly higher sulfur solubilities at the higher temperatures. With the technique used in the present study, it is virtually impossible to err on the side of a too-high solubility. However, from the description of Hammick's technique, his method might appear to suffer from an inadequate means of mixing.

B. Monoethers

The sulfur solubility data for all of the monoethers tested are shown in Figure 2-3. These data are expressed on a weight fraction basis for comparsion because the ethers have widely varing molecular weights. All of the curves exhibit a break at or below the melting point of sulfur, T_m. This "break" corresponds to a phase transition from solid to liquid sulfur. Slope changes that occur below T_m indicate some solvent solubility in sulfur. This is a manifestation of freezing point depression. The solvents with more hydrocarbon character are the better solvents for sulfur. The solvating power also increases as the effect of the substituent hydroxyl group is "diluted" with either longer ether linkages or longer aliphatic groups. Refer to Table 2-2 for the mathematically-fitted results of sulfur solubilities in these solvents above and below T_m.

C. Glymes

In the series di-, tri-, and tetraglyme there is no real difference in sulfur solubility characteristics. These results are shown in Figure 2-4. A possible reason for the similarity is that a terminal methyl group is similar to an internal CH_2 group. That is, two diglyme molecules have about the same solvating ability as one pentaglyme molecule. Thus, polyglyme (i.e. Selexol) is anticipated to have about the same sulfur solubility characteristics as the lower glymes. Of all the glycol ethers tested, the glymes are the best solvents for sulfur. Refer to Table 2-

2 for fitted numerical results.

D. Glycol

The sulfur solubility data (Figure 2-5) for the solvent series diethylene glycol (DEG), diethylene glycol methyl ether (Dowanol DM), and diethylene glycol dimethyl ether (diglyme) show the effects of exchanging substituent terminal methoxy groups for hydroxyl groups. The basic observation is that terminal hydroxyl groups decrease sulfur solubility. Also note that, starting with DEG, substituting one methoxy group for a hydroxyl to make DGM has a greater effect than substituting the second methoxy group to make diglyme. Refer to Table 2-2 for the fitted numerical results.

E. Summary

The solubility curves for all the solvents tested are shown in Figure 2-6. Except for the two nitrogen containing compounds, all the slopes are reasonably constant and are offset by a constant activity coefficient (see Equation 2-1). An estimate of the activity coefficient for sulfur in each of these solvents is shown in Table 2-3.

2.4.3 EFFECT OF WATER

A preliminary study was conducted to determine the effect of small amounts of water on the solubility of sulfur in the organic solvent. Diglyme with 5 wt% water and Dowanol DM with both 2.5 and 5.0 wt% water were selected to study this effect. The solubility of sulfur in a given mixture of glycol ether and water was determined using the same method as for pure solvent. The upper temperature limit was set by the need to avoid vaporizing water from the mixture. As a result, data were collected over a much narrower temperature range.

The results of this study are shown in Figure 2-7. As expected, water decreases the solubility of sulfur. However, 5.0 wt% water in diglyme is still a

better solvent for sulfur than pure Dowanol DM. From a process point of view this flexibility is desirable.

2.4.4 MIXED ORGANIC SOLVENTS

Potentially, an appreciable quantity of catalyst is required in the solvent to achieve a suitable reaction rate. The presence of the catalyst could affect the sulfur solubility characteristic of the bulk solvent. A parametric study was completed to elucidate the solubility behavior over a wide variation of bulk solvent and catalyst compositions. N,N-dimethylaniline (DMA) and Dowanol DM were selected as model compounds for the catalyst and bulk solvent. Mixtures of DMA and Dowanol DM were prepared and tested for sulfur solubility. The results are shown in Figure 2-8 and the regular behavior of the mixtures is obvious. The phase transition or "break" in the solubility curve occurs at lower temperatures in the mixtures because DMA, which is soluble in sulfur, is extracted into the sulfur-rich phase. Furthermore, DMA extracts some Dowanol DM along with it. The shifting of the "break" or freezing point depression increases with DMA content and perhaps goes through a maximum. The limiting slope of the solubility curves is about double the ideal solution value. The linear behavior of the curves indicates that the activity coefficient is approximately constant. These curves can be used to generate a ternary mixture phase envelope. Refer to **Section 2.5** and **Appendix A.2** for this analysis.

2.4.5 SOLVENT SOLUBILITY IN SULFUR

As noted before, a "break" in the solubility curve (or phase transition) below T_m indicates solvent solubility in liquid sulfur. In systems of pure glycol ethers and sulfur it is difficult to tell if there is a phase transition below the melting point of sulfur. Except for Dowanol DM and Dowanol DPM, the data indicate little if any solubility of glycol ethers in liquid sulfur. To verify this assumption,

sulfur and various glycol ether solvents were equilibrated at 120 ^{o}C and 140 ^{o}C. The liquid sulfur phase was analyzed for extracted solvent. The experimental technique used to sample and analyze the sulfur rich phase is described in **Section 2.5.1.**

The solvents tested were di-, tri-, and tetraglyme, Dowanol DM and diethylene glycol. At 120 ^{o}C and 140 ^{o}C, the glymes had concentrations of about 0.5 wt% solvent in sulfur. There was no detectable change in concentration with temperature over this limited range. Dowanol DM and DEG were not detected in the sulfur phase at either temperature. The results from the indirect observations and direct analysis are somewhat at odds with each other. The absence of Dowanol DM in the sulfur phase is not consistent with the phase transition below T_m that is shown in the solubility curve. Also, the glymes showed slight solubility in sulfur but the solubility curve indicates the opposite conclusion. This discrepancy may be due to the lack of sufficient precision in the method of solubility measurement near the melting point of sulfur. The results indicate that, of the polyglycol ether solvents tested, the glymes are the best solvents for sulfur. To an extent, the glymes are soluble in molten sulfur.

2.5 TERNARY SYSTEM

This study is an extension of the investigation described in **Section 2.4.4.** In an industrial process, the separation of sulfur from solvent is accomplished by melting and decanting molten sulfur at elevated temperature. Thus, mutual solubility data are needed for an actual sulfur-solvent-catalyst system at process conditions. To this end, the ternary phase diagram was determined for DMA, Dowanol DM, and sulfur at 120 ^{o}C. This temperature is assumed to be a nominal separation temperature. Although many catalyst compounds are under consideration, a study of this sort for all combinations of catalyst, bulk solvent and sulfur would be monumental. The results presented here should serve as a

guide to the expected general behavior for these systems.

2.5.1 EXPERIMENTAL METHOD

The ternary phase envelope, shown in Figure 2-9, for the DMA-Dowanol DM-sulfur system was constructed using cross-plot information from the sulfur solubility study on mixed organic solvents. The numbers on the phase envelope represent the composition of the bulk solvent phase used in the sulfur solubility study. As indicated, actual data points extend around only half of the phase envelope. Solvent mixtures of 90 and 95 wt% DMA were attempted but these results proved invalid. This was because the Dowanol DM portion of the solvent mixture would separate and form a "sheen" on top of the sample. It was difficult to determine when the sulfur completely dissolved. This difficulty does not occur when the sample contains mostly solvent and only a little sulfur. The sulfur sinks and it is easy to tell when it dissolves. Because of this limitation with the previously described technique, both phases must be analyzed (1) to further define the phase envelope on the sulfur-rich side and (2) to establish the tie lines.

SOLVENT-RICH PHASE ANALYSIS

Measuring the solvent-rich phase is straightforward. The method used here is as follows. First, in a 2x15 cm test tube with a stirring bar in the bottom, weigh in known amounts of sulfur and solvent mixture. Use enough sulfur and solvent to have phases large enough to take samples of each phase from the test tube. This corresponds to about 30 gms of material. The sample is equilibrated (±2 ^{o}C) in a stirred oil bath. The actual temperature is measured using a thermometer placed in the bath. A sample of the top (solvent) phase is obtained using a heated (disposable) glass pipette. The immersed portion of the pipette is first heated to prevent precipitation of sulfur from the solvent. The stirrer is turned off at this point. The heated pipette tip is then placed in the solvent phase and allowed to temperature-equilibrate with the surrounding liquid for about one minute; and

then a sample of the liquid is withdrawn. The outside of the pipette is wiped clean of solvent, then the pipette is placed into another small test tube of known weight. The two are placed in an oven held at 120 ^{o}C. The sample in the pipette melts, letting the solvent and sulfur dribble from the pipette into the test tube. After this, the drained pipette is removed. The test tube and sample are weighed and the sample mass determined by difference. The test tube containing the sample is cooled in ice to precipitate as much sulfur as possible.

At this point, there are two routes for further analysis. First, if the phase envelope is known in the region of interest, and is assumed correct, only the relative amounts of DMA and Dowanol DM need be determined to fix the composition of the solvent phase. This is done by decanting the solvent phase and analyzing it by gas chromatography. A Chromosorb 101 column, 2 meters long, at 235 ^{o}C is suitable for this analysis. As shown in Figure 2-9, point (A) is the measured, sulfur-free solvent composition and point (B) is the intersection of the phase envelope and the line extending from point (A) to the pure sulfur vertex. Point (B) is the actual composition of the original solvent rich phase.

In the second method of analysis it is appropriate to verify the phase envelope or the actual sulfur content of the sample. Before cooling the sample in ice, add a known quantity of quinoline or other suitable compound as an internal standard (i.e. one that does not have a G.C. peak that interferes with either the DMA or the Dowanol DM peaks). The quantity added should be comparable to the estimated amounts of DMA and Dowanol DM present. As before, the sample is cooled in ice and analyzed by GC. The actual weights, as well as the relative amounts, of DMA and Dowanol DM are determined by referencing them to the internal standard. The amount of sulfur is determined by difference from the original sample weight and the calculated amounts of DMA and Dowanol DM present. Accurate GC results were achieved using the Chromosorb 101 column at 250 ^{o}C with a thermal conductivity detector. The reproducibility over four runs using this

technique was 1.2%.

SULFUR-PHASE ANALYSIS

The analysis of the sulfur rich phase is more involved. Dowanol DM (like most glycol ethers) is not very soluble in sulfur. DMA is much more soluble. The basic problem in this analysis is to measure a small concentration of solvent dissolved in sulfur. Described below is the technique developed to accomplish this analysis.

SAMPLING THE SULFUR RICH PHASE

The bottom, sulfur-rich phase must be sampled without contaminating the sample with the top, solvent-rich phase. Since there is only a small amount of Dowanol DM in the sulfur phase, any contamination by the top phase will introduce substantial error in the analysis. The experimental set-up described in the previous section was used. The sample size is very important. If the sample is too large, inadequate mixing occurs because the small stirring bar cannot create a liquid surface vortex. About 1.5-2 inches of liquid sample in a 1.6 x 15 cm test tube is optimum. Glass pipettes were modified by sealing and bending the end (see Figure 2-10). The sealed pipette is heated in a "cool" bunsen burner flame. Care is taken not to melt it further. The reason for heating the pipette is to prevent sulfur from precipitating on its surface when it is lowered through the top phase. The stirrer is turned off and the phases are allowed to fully separate. The pipette is immersed in the lower phase. The bent tip is broken off by pushing it against the bottom of the test tube. The sulfur sample is drawn into the pipette and the pipette is rapidly withdrawn through the top phase. A slight suction must be maintained on the pipette so none of the sulfur drains out. The sample rapidly solidifies in the tube. The bottom 1-2 cm of the pipette tip is broken off and discarded. The discarded piece contains any solvent that might have been captured when the pipette was removed through the top (solvent-rich)

phase. The outside of the pipette is wiped clean, then the pipette is placed in a weighed test tube and put (in a vertical position) in an oven at 120+ ^{o}C. The sample melts out of the pipette and into the test tube. The pipette is removed from the test tube and the sample mass is determined by weighing.

ANALYZING THE SULFUR SAMPLE

Since the sample is mostly sulfur, it will solidify in the bottom of the test tube as a mass that occludes the dissolved solvent. Therefore, just analyzing the non-occluded solvent is invalid. The entire sample is analyzed as follows. (1) The entire sulfur sample is dissolved in a minimum amount of carbon disulfide. Sulfur solubility in carbon disulfide is approximately 1/2 gm sulfur/gm CS_2 at room temperature. A slight excess of carbon disulfide insures that adequate liquid will be present after the sulfur is re-precipitated. (2) An amount of quinoline is added and its mass determined by weighing. This amount should be of the same magnitude as the mass of Dowanol DM expected in the sample. (3) The sample is cooled in ice to precipitate as much sulfur as possible. (4) The sample is then decanted and the supernatant liquid saved. (5) The supernatant liquid is analyzed by gas chromatography using a Flame Ionization Detector (FID). The FID is necessary to measure the small amounts of Dowanol DM present. When using a column of Chromosorb 101 two meters long a temperature of 250 ^{o}C is adequate to elute the quinoline (helium carrier, 0.5cc/sec) in about 13 minutes.

The masses of DMA and Dowanol DM are determined by comparing their G.C. peaks and the reference quinoline peak. Carbon disulfide is essentially transparent to the FID; this is beneficial since the sample contains mostly CS_2.

As a precaution, the solvent and sulfur phases are withdrawn from different initial batches. Any loss of sulfur from the top phase during sampling of the bottom phase would influence subsequent analysis of the top phase.

2.5.2 RESULTS AND DISCUSSION

The ternary phase diagram for DMA, Dowanol DM and sulfur at 120 ^{o}C is shown in Figure 2-11. As described previously, the left hand portion of the phase envelope was determined using sulfur solubility data from Figure 2-8 and coordinate transformation relationships. Refer to Appendix A.2 for more detail on coordinate transformations from solubility limit data in a solvent mixture to a ternary diagram representation. The right-hand side of the envelope (but above the plait point) was determined by analyzing (GC/TCD) the top, solvent-rich phase of an equilibrated two-phase sample. The phase envelope below the plait point was completed by analysis of the sulfur-rich phase. The latter analysis requires the use of a GC equipped with a Flame Ionization Detector (FID). This piece of equipment was not immediately available, so a few analyses were done on borrowed equipment. Nevertheless, the phase envelope is sufficiently known for reliable estimates. The tie lines were determined by analyzing the top phase as described before and using the known bulk sample composition. The conjugate line was estimated from the tie lines. Extrapolating the conjugate line construction to the phase envelope places the plait point at 0.5 wt% Dowanol DM, 13.7 wt% DMA, and 85.8 wt% sulfur. Refer to Appendix A.4 for the data used to generate this plot.

From a process synthesis point of view, these results indicate that the separation of molten sulfur from solvent would result in appreciable loss of the more-soluble catalyst component in the sulfur. However, reducing the catalyst concentration required in the solvent reduces the problem of co-extraction loss.

2.6 SUMMARY

Among the glycol ether solvents tested , the glymes are the best solvents for sulfur. The three glymes tested have essentially the same sulfur solubility characteristics. Depending on the process application, the monoethers might also

be suitable. The presence of water in these solvents does decrease sulfur solubility. However, 5.0 wt% water in the glymes still yields acceptable sulfur solubiltiy. Molten sulfur is completely miscible with both DMA and quinoline and probably with any other compound similar in structure to either of these. Crystallization of sulfur from solution is a better approach to sulfur separation than is the decanting of molten sulfur from the process solvent because the latter leads inevitably to contamination of the product sulfur and loss of solvent components.

List of Tables

2-1 Compounds tested in sulfur solubility study.

2-2 Sulfur solubility constants for polyglycol ether solvents.

2-3 Activity coefficient for sulfur in polyglycol ether solvents.

List of Figures

2-1 Schematic of sulfur solubility apparatus.

2-2 Sulfur solubility in N,N Dimethylaniline (DMA) and Quinoline.

2-3 Sulfur solubility in mono ethers of n-ethylene glycol.

2-4 Sulfur solubility in di ethers of n-ethylene glycol.

2-5 Effect of substituent hydroxyl group on sulfur solubility.

2-6 Comparision of sulfur solubility in organic solvents.

2-7 Effect of water on sulfur solubility in glycol ethers.

2-8 Sulfur solubility in mixtures of DMA and Dowanol DM.

2-9 Ternary phase diagram from mixture solubility data.

2-10 Modified pipettes for sampling sulfur rich phase.

2-11 Ternary phase diagram: DMA, Dowanol DM, Sulfur

Table 2-1

COMPOUNDS TESTED IN
SULFUR SOLUBILITY STUDY

Common Name	Compound	MW	BP (^{o}C)
	Diethers		
Diglyme	Di ethylene glycol dimethyl ether	134.2	162
Triglyme	Tri ethylene glycol dimethyl ether	178.2	216
Tetraglyme	Tetra ethylene glycol dimethyl ether	222.3	275
	Monoethers		
Dowanol DM	Di ethylene glycol methyl ether	120.1	194
Dowanol TBH	Tri ethylene glycol butyl ether	231.2	283
Dowanol DPM	Di propylene glycol methyl ether	148.2	188
Dowanol TPM	Tri propylene glycol methyl ether	206.3	2424
	Glycol		
DEG	Di ethylene glycol	106.1	246
	Model Catalyst Compounds		
DMA	N,N Dimethyl Aniline	121.2	194
QUIN	Quinoline	129.2	237

N.B.: MW = Molecular Weight
BP = Boiling Point (^{o}C) at 1 atm.

Table 2-2

SULFUR SOLUBILITY CONSTANTS
FOR GLYCOL ETHER SOLVENTS

$$\text{Wt. \% Sulfur} = EXP[A(T_m/T) + B]$$

	Solid		*Knee*	*Liquid*	
	A	B	T (^oC)	A	B
Diglyme	-10.994	12.584	110	-5.467	7.018
Triglyme	-10.994	12.584	110	-5.467	7.018
Tetraglyme	-10.994	12.584	110	-5.467	7.018
Dowanol DM	-11.771	12.666	112	-7.312	8.202
Dowanol TBH	-11.022	12.418	109	-6.112	7.462
Dowanol DPM	-11.509	12.693	108	-6.095	7.209
Dowanol TPM	-11.509	12.693	108	-6.095	7.209
DEG	-10.330	9.703	117	-8.889	8.279

N.B.: T_m = Melting point of rhombic sulfur (386 K).

T = Dissolution temperature in Kelvin.

Table 2-3

ACTIVITY COEFFICIENTS FOR SULFUR
IN GLYCOL ETHER SOLVENTS
(Based on S_8, See Equation 2-1)

Diglyme	39
Triglyme	29
Tetraglyme	24
Dowanol DM	87
Dowanol TBH	27
Dowanol DPM	53
Dowanol TPM	38
DEG	452

FIGURE 2-1

Sulfur Solubility Apparatus

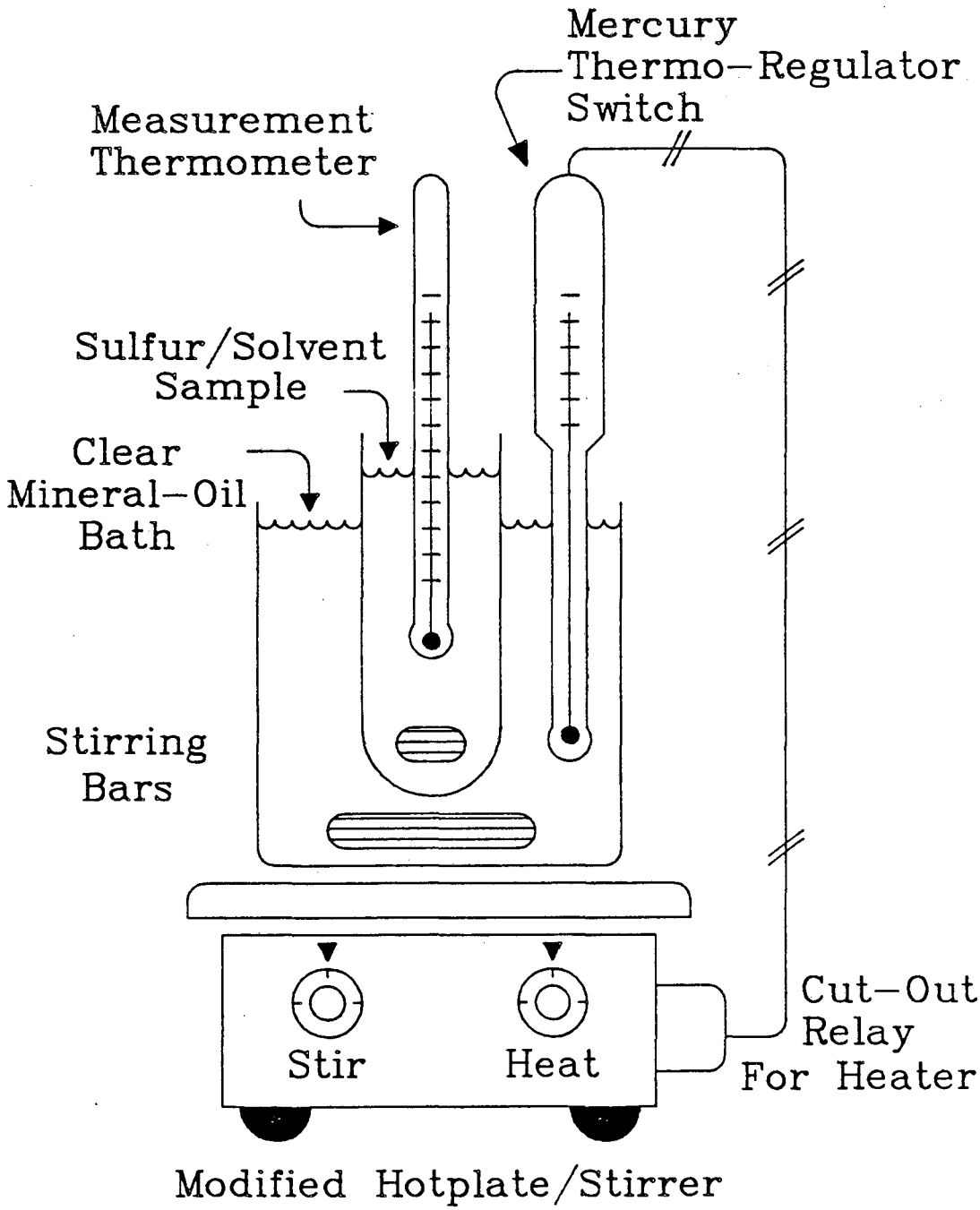

FIGURE 2-2

Sulfur Solubility in N,N-Dimethylaniline and Quinoline

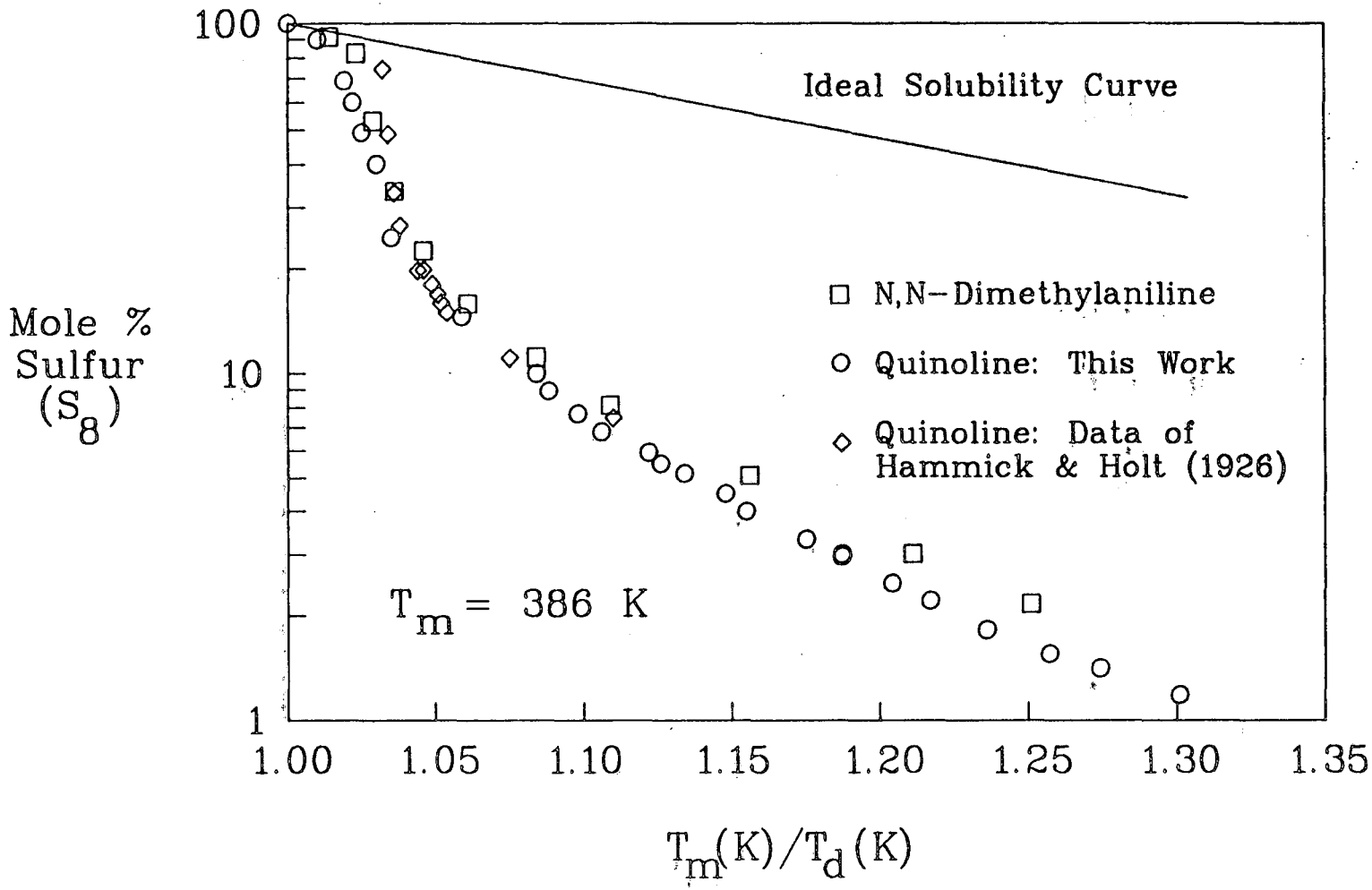

FIGURE 2-3

Sulfur Solubility in Monoethers

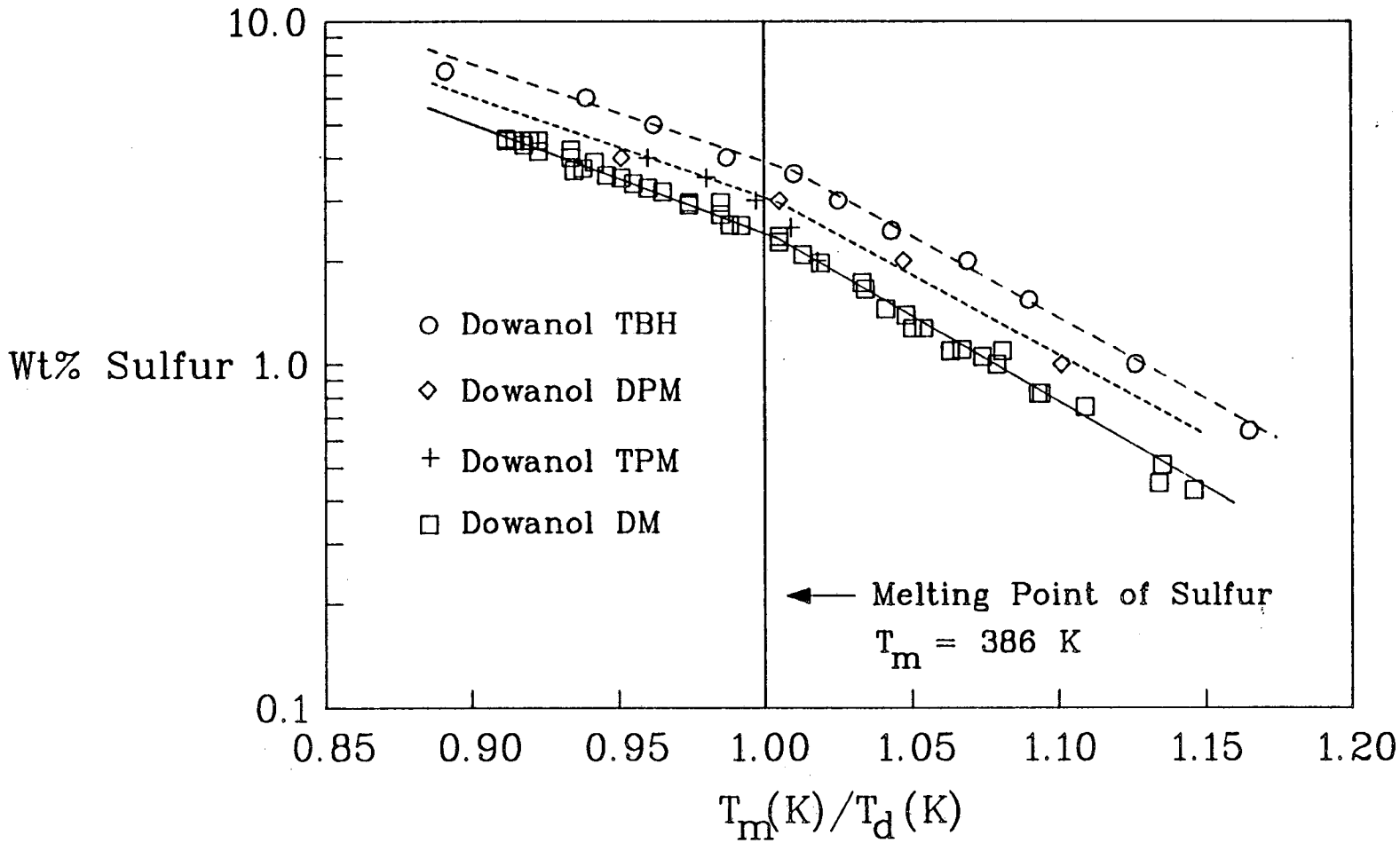

FIGURE 2-4

Sulfur Solubility in Diethers

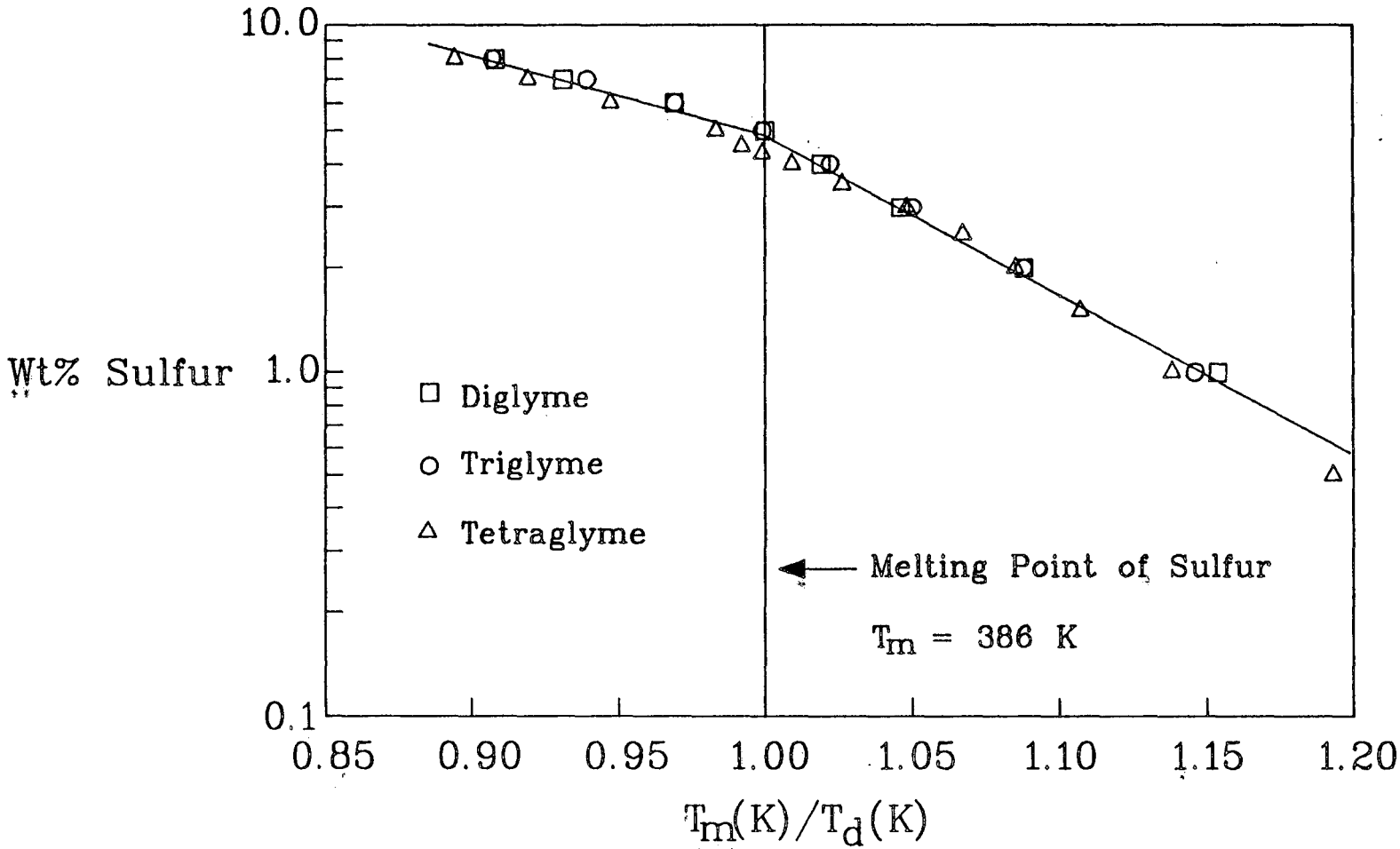

FIGURE 2–5

Effect of Hydroxyl Group on Sulfur Solubility

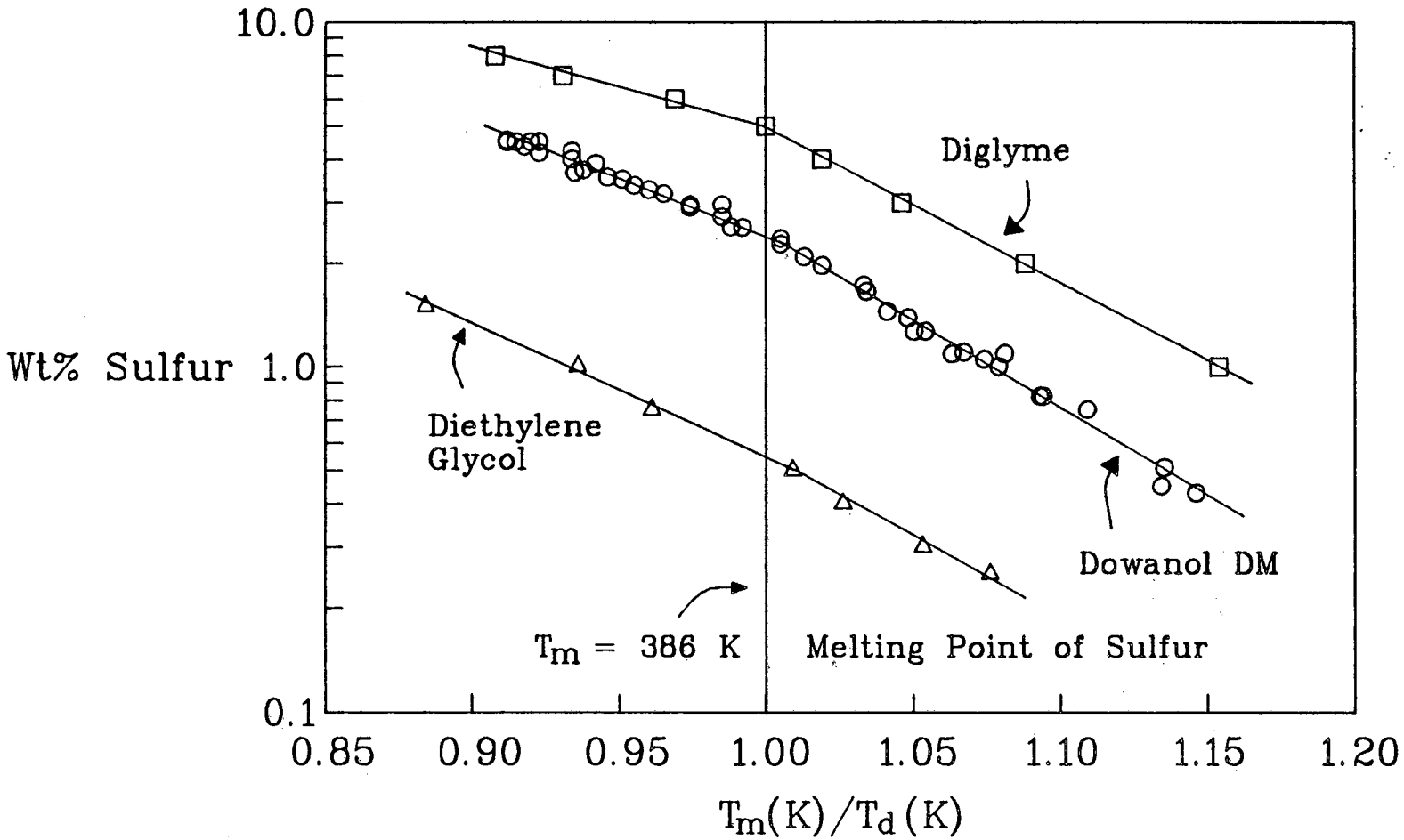

FIGURE 2–6

Sulfur Solubility in Pure Organic Solvents

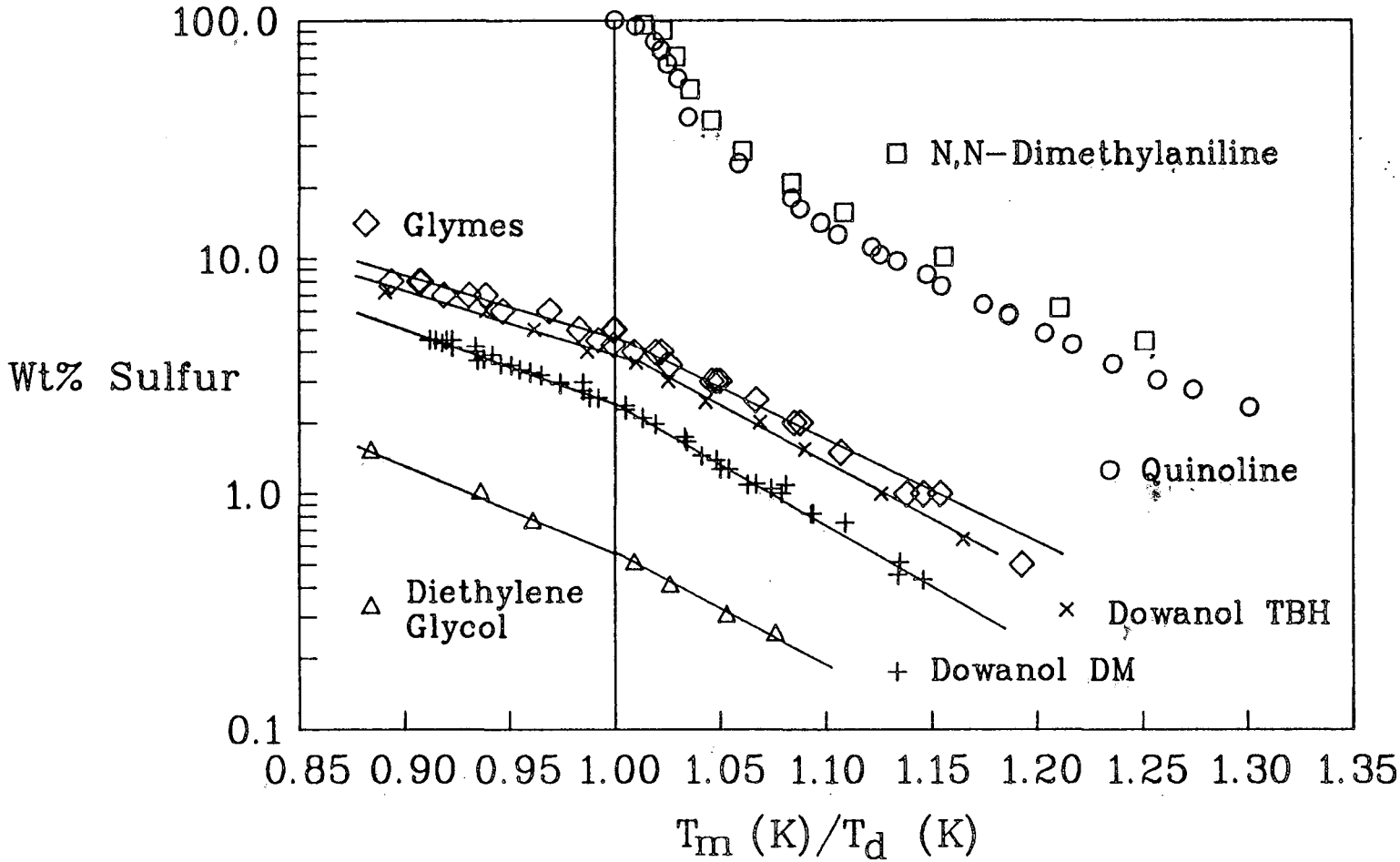

FIGURE 2–7

Effect of Water on Sulfur Solubility in Polyglycol Ether Solvents

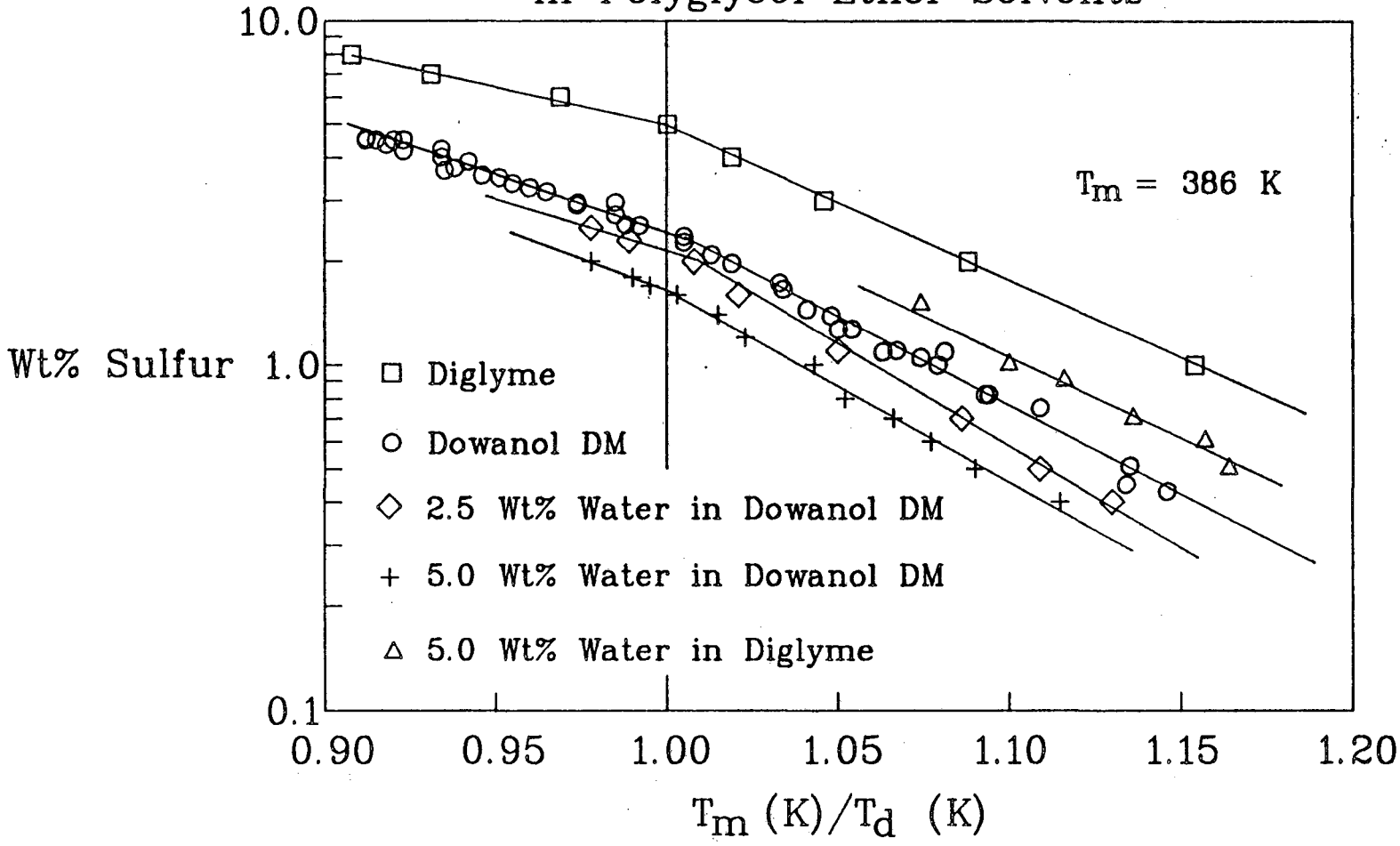

FIGURE 2-8

Sulfur Solubility in Solvent Mixtures
N,N-Dimethylaniline and Dowanol DM

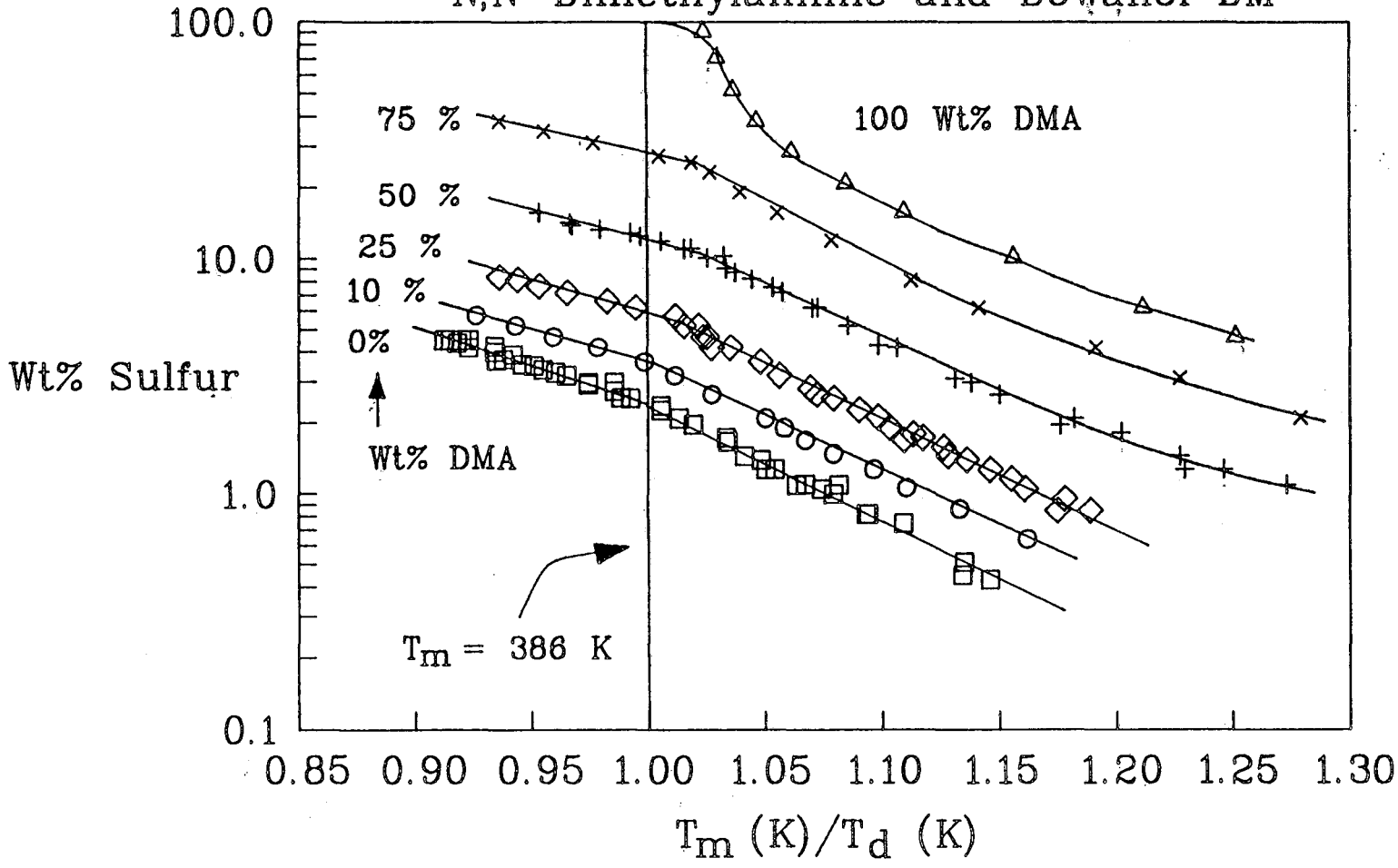

FIGURE 2-9

Determination of Solvent-Rich Phase Composition from a Sulfur-Free Solvent Analysis and Sulfur Solubility Data for Solvent Mixtures at 120 °C

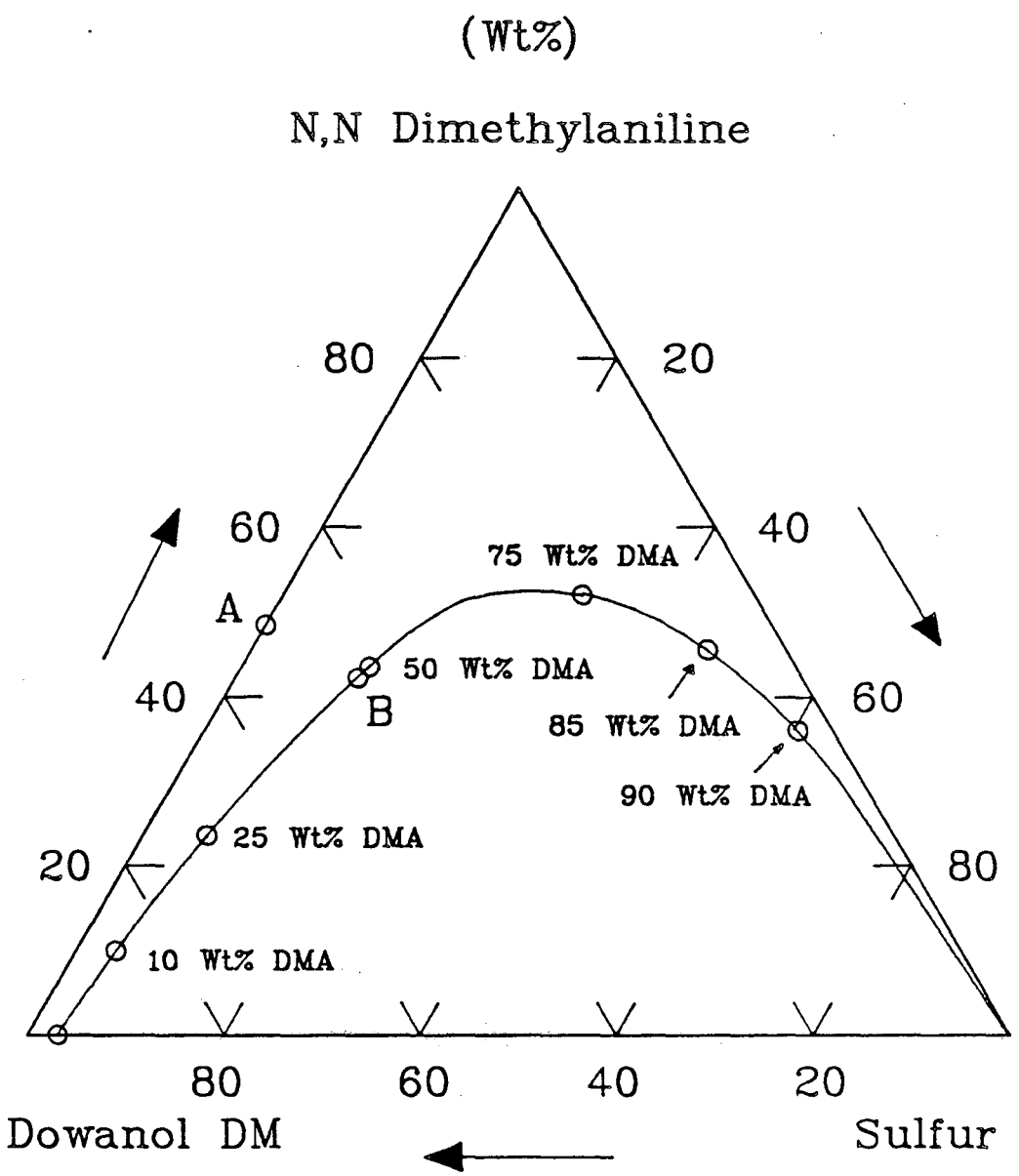

FIGURE 2-10

Modified Sample Pipette

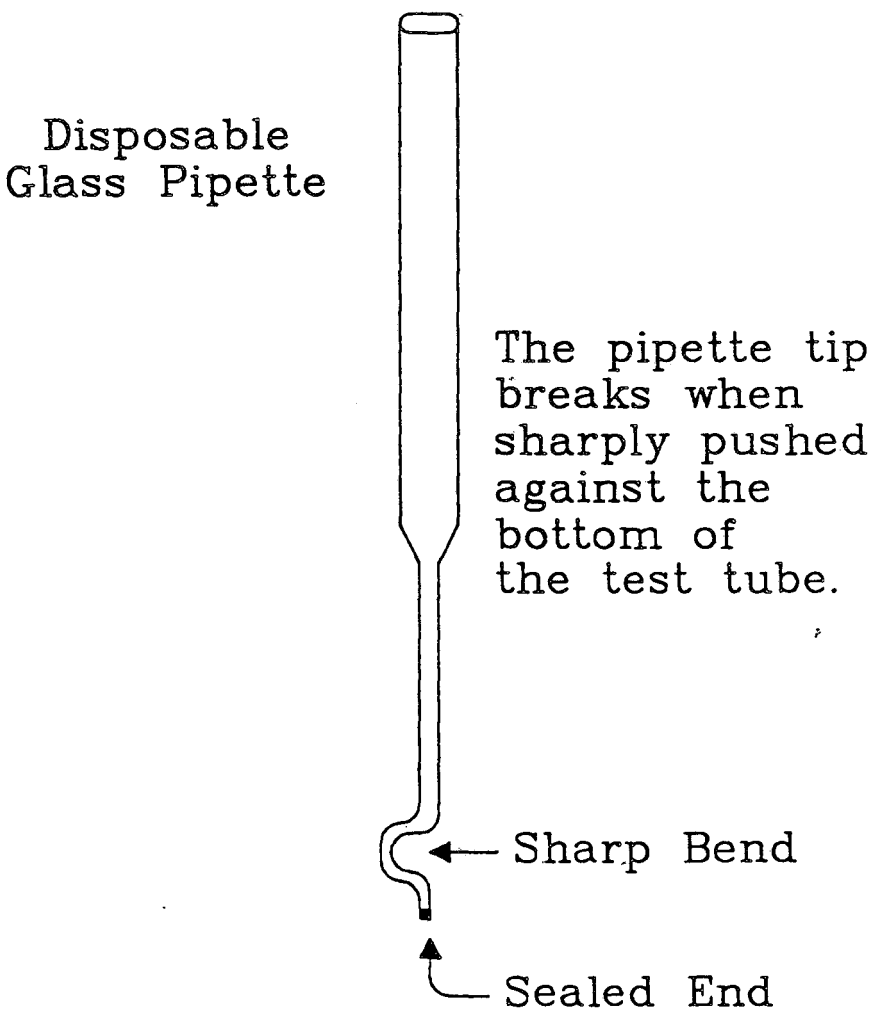

FIGURE 2–11

Ternary Phase Diagram
at 120 °C

(Wt%)

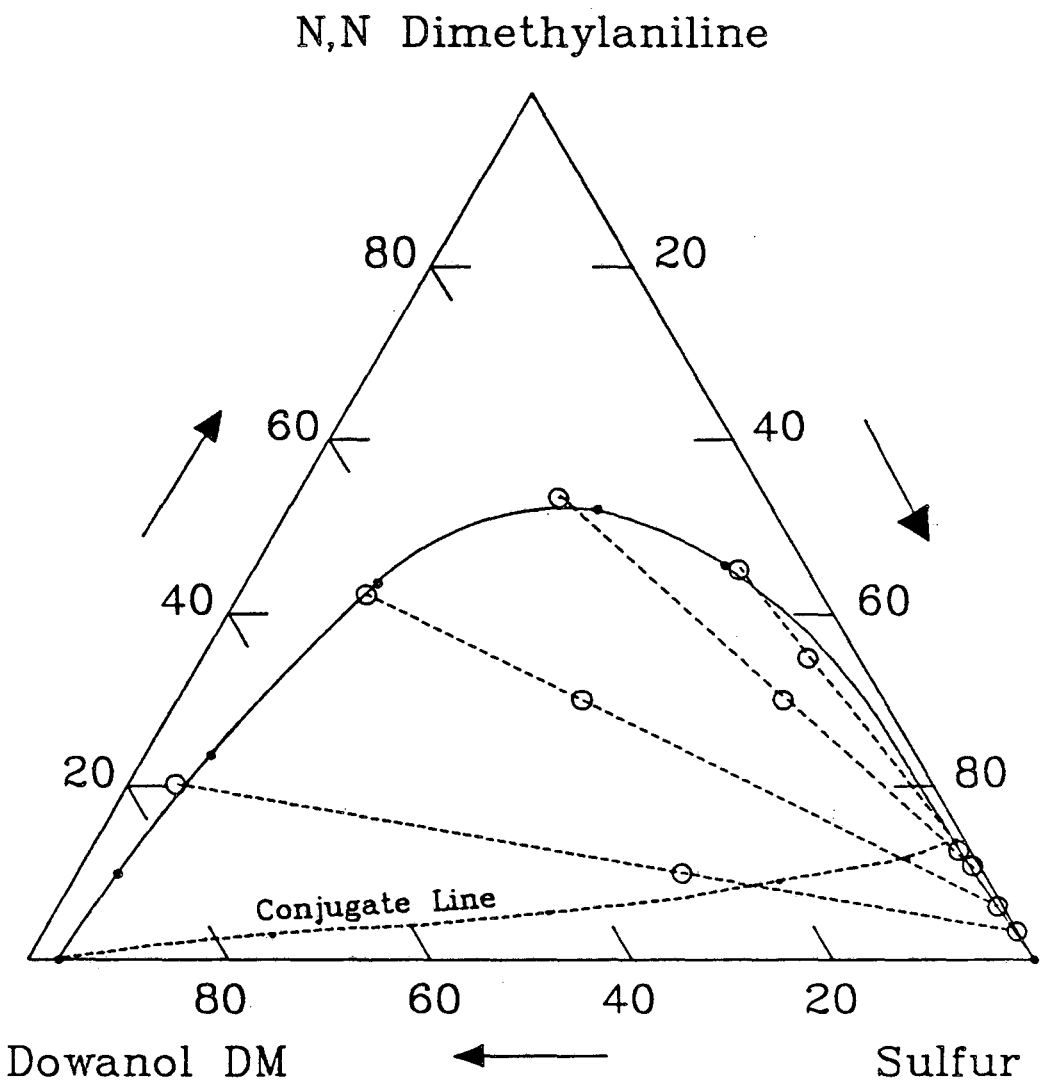

CHAPTER 3
LIGHT GAS SOLUBILITY

3.1 PREFACE

Gas absorption utilizing a physical organic solvent is a major unit operation in the University of California, Berkeley, Sulfur Recovery Process (UCBSRP). Accurate solubility data for light gases in the organic solvent are necessary for the confident design of unit operations involving vapor-liquid equilibria. Potentially, there are many gaseous components in the stream being treated. However, only a few are of major importance. These gases are sulfur dioxide (SO_2), hydrogen sulfide (H_2S), carbon dioxide (CO_2), propane (C_3) and n-butane (n-C_4). The solvents of interest are the mono- and diethers of polyethylene glycol. These solvents are characterized by low vapor pressure (high boiling points), miscibility with water and, in some cases (unfortunately), higher viscosities. In general, the polyglycol ethers are relatively good to excellent solvents for these gases. Table 3-1 lists the polyglycol ether solvents and their trade names investigated in this study. Pertinent physical property data for the solvents and gases are given in Table 3-2 and Table 3-3.

The measurement of the solubility of sulfur dioxide in these solvents was the subject of an earlier investigation by Demyanovich (1984). The remaining combinations of gas and solvent pairs represents a formidable amount of data collection. Data are needed at the conditions encountered in the actual process. Typical conditions are: hydrogen sulfide partial pressure, 0-100 kPa; temperature, 10-100 ^{o}C; and a composition, up to 5 mole% dissolved gas.

3.2 THEORY

3.2.1 Gas Solubility in Pure Solvents

The thermodynamic theory describing vapor-liquid equilibria of gases in

liquids is well understood (Prausnitz, 1969). Only the pertinent results are discussed here. In dilute gas-liquid systems the solubility behavior of the solute gas will closely approach Henry's Law. On the other hand, the behavior of the liquid solvent more closely follows Raoult's Law. Designating the solvent as component (1) and the solute as component (2), the phase equilibrium relationships for both are:

SOLVENT: $$f_1 = \phi_1 y_1 P = \gamma_1 x_1 P_1^s \phi_1^s (PC)_1 \quad (3\text{-}1)$$

SOLUTE: $$f_2 = \phi_2 y_2 P = \gamma_2^* x_2 H_{2,1} (PC)_2 \quad (3\text{-}2)$$

Where:

f_1, f_2 = Fugacities

ϕ_1, ϕ_2 = Vapor-phase fugacity coefficients

y_1, y_2 = Vapor-phase mole fractions

x_1, x_2 = Liquid-phase mole fractions

γ_1 = Solvent activity coefficient (symmetric normalization)

γ_2^* = Solute activity coefficient (unsymmetric normalization)

$H_{2,1}$ = Henry's law for solute (2) in solvent (1)

P_1^s = Vapor pressure of solvent

ϕ_1^s = Solvent vapor fugacity coefficient at P_1^s

$(PC)_1$ = High pressure correction term for liquid solvent

$(PC)_2$ = High pressure correction term for liquid solute

At pressures below about 100 kPa, ϕ_1, ϕ_2, ϕ_1^s, $(PC)_1$ and $(PC)_2$ approach unity. Thus, in the low pressure limit, Equation (3-1) and (3-2) become:

SOLVENT: $$f_1 = y_1 P = \gamma_1 x_1 P_1^s \quad (3\text{-}3)$$

SOLUTE: $$f_2 = y_2 P = \gamma_2^* x_2 H_{2,1} \quad (3\text{-}4)$$

For very soluble gases the mole fraction of dissolved solute can become quite

high and the value of γ_2^* differs significantly from unity. A simple approach is to assume a Two-Suffix Margules equation for the activity coefficient. The activity coefficient for the solute is normalized according to the unsymmetric convention.

SOLVENT: $$\ln \gamma_1 = (A/RT)(x_2)^2 \tag{3-5}$$

SOLUTE: $$\ln \gamma_2^* = (A/RT)(x_1^2-1) \tag{3-6}$$

In the dilute-solution limit both γ_1 and γ_2^* approach unity. Rearranging and including Equation (3-6) into Equation (3-4) results in

$$\ln (f_2/x_2) = \ln H_{2,1} + (A/RT)(x_1^2-1). \tag{3-7}$$

This is a modified form of the Krichevsky-Ilinskaya equation in which the high pressure correction terms have been neglected. Equations (3-7), (3-3), and (3-4) are the basis for correlating light gas solubility data. At constant temperature, a plot of $\ln (f_2/x_2)$ vs. $(x_1^2 - 1)$ yields A/RT as the slope and $\ln H_{2,1}$ as the intercept. Solution of these equations is either by trial and error, with an initial estimate for the value of the solvent activity coefficient, or by non-linear simultaneous solution.

3.2.2 The Effect of Temperature on Gas Solubility

The temperature variation of Henry's law is dependent on the enthalpy change from vapor to dissolved solute (heat of solution). The appropriate temperature functionality for correlating Henry's law values is seen by considering the case of a non-volatile solvent and and dissolved solute at low pressure. This derivation is given in **Appendix B.1**. The result is given here.

$$d \ln(H_{2,1})/d\,(1/T) = \Delta H_{soln}/R \tag{3-8}$$

If the Heat of Solution is negative then the solubility decreases (or Henry's

law value increases) with increasing temperature. Over small temperature ranges the Heat of Solution is insensitive to temperature. In this case, a simple one-term expansion in 1/T provides an adequate mathematical description of Henry's law with temperature.

3.2.3 Gas Solubility in Mixed Solvents

The thermodynamic formulation of gas solubility with mixed solvents is potentially quite complicated, especially if any chemical interactions exist. An estimate is given by Prausnitz (1969) based on the simplest Wohl expansion for the excess Gibbs energy at constant temperature and the final result is given here.

$$\ln H_{2,M} = x_1 \ln H_{2,1} + x_3 \ln H_{2,3} - a_{1,3} x_1 x_3 \tag{3-9}$$

Where:

$H_{2,M}$ = Henry's law value for the solute in the solvent mixture.

$H_{2,1}, H_{2,3}$ = Henry's law value for the solute in each of the two solvents.

x_1, x_3 = Composition of the solute free solvent.

$a_{1,3}$ = Interaction parameter

An implicit assumption in the derivation is that the mole fraction of solute (x_2) is negligibly small. If $a_{1,3} = 0$ then the two solvents form an ideal mixture. If $a_{1,3} > 0$ the mixture exhibits positive deviations from Raoult's Law. As a result, the solubility is greater in the actual mixture than one would predict for an ideal mixture. The opposite is true if $a_{1,3} < 0$. When the two solvent molecules differ greatly in size there is some theoretical justification for using the molar volume fraction instead of the mole fraction. If the two solvents have the same mass densities, the molar volume fraction is numerically equal to the weight fraction.

3.3 EXPERIMENTAL APPARATUS

The binary phase equilibrium problem for the case of a dilute gaseous solute is described by Equation 3-7. To determine the value of parameter A/R and the variation of Henry's constant, $H_{2,1}$, with temperature, data are needed on the variation of solute fugacity, f_2, with system temperature, T, and solute composition in the liquid phase, x_2. The solute fugacity is a function of temperature and pressure as well as the composition of both phases.

3.3.1 Approach

In the design of any experimental apparatus the following questions must be addressed: (a) what quantities need be measured? (b) what accuracy is required? (c) how much will it cost? (d) what duration of experimental work is acceptable? (e) What are the advantages and constraints of the particular system? The advantages in working with these particular gases and solvents are worth mentioning since, in this case, they determine the basic experimental approach. First, the gases are reasonably soluble in the solvents. Second, the solvents have low volatility and readily degas upon heating with agitation. Also of importance, solubility data at low solute-gas partial pressures are desired. These factors suggest that a closed, low-pressure system will yield acceptable data.

The composition of both phases in this system must be specified. One approach is to analyze samples from both phases, but sampling and analysis can get quite involved. Charging the system with known amounts of solvent and gas and then estimating the phase compositions is experimentally simpler, but this procedure of course raises the question of accuracy. The error in this approach is the uncertainty in estimating the distribution of solute between the liquid and the vapor phases. At low pressure the quantity of solute in the vapor can be quite small provided the solute is very soluble in the solvent.

The methods of measuring temperature and pressure are tied to the desired

accuracy of the measurements, the number of measurements required and the experimental-time considerations. Automated data acquisition and computer control is desired because of the many gas-solvent systems under consideration and the time-intensive nature of equilibrium experiments. This approach to data collection and experimental control requires eletrical signals as inputs. For this reason temperature is measured with a thermocouple and pressure with a transducer.

The basic experiment is to charge a closed system with a known amount of solvent and gaseous solute and then measure the system pressure as a function of temperature. The fugacity of the solute is determined from the measured total pressure and the system composition. The experiment is repeated with different concentrations of gaseous solute.

3.3.2 Equilibrium Cell

Refer to Figure 3-1 for a schematic of the measuring portion of the experimental setup and **Appendix B.3**, Table 1 for equipment specifications. A pressure transducer is connected to the round-bottom flask shown in Figure 3-1. This pressure transducer accurately measures the system pressure and generates an electrical-signal output. Temperature is measured via a thermocouple inserted into a glass thermowell which is integral to the flask headpiece. The thermowell contains a few drops of oil to facilitate heat transfer to the thermocouple. Mixing is accomplished by a magnetic stirring bar. The flask is heated and agitated by a programmable hotplate/stirrer (Dataplate™) which is modified to control either a heating mantle or the standard hotplate. Temperature feedback to the Dataplate is by a J-type thermocouple also inserted in the glass thermowell. The overall system is designed to minimize the head-space volume. The amount of solute gas in the vapor space represents an uncertainty in the liquid-phase composition. Also, it is important to minimize the weight of the flask so the capacity of the

balance used for weighing is not exceeded. The volume of the flask is chosen so that sufficient solvent is present to dissolve enough gas to be weighed with precision. In this work the flasks used had volumes of 100 ml and 250 ml; the smaller flask was used for the more soluble gases.

3.3.3 Gas Addition System

A key part to automating this experiment is the method by which gas is metered into the measuring flask and its amount accurately known. The method of choice used here is gas flow from a known volume. This method is indirect and requires accurate pressure and temperature measurements in a small gas cylinder. At elevated pressure the non-ideal nature of the gas necessitates the uses of gas compressibility data. This approach is entirely applicable to computer control. The gas addition apparatus is shown in Figure 3-2; refer to **Appendix B.3**, Table 2 for equipment specifications. The apparatus consists of a 1/4-inch pipe stainless steel cross modified to include a fifth pipe port perpendicular to the cross. A small gas cylinder (or "bomb") is connected to the vertical fifth port with a 1/4-inch close nipple. A thermowell is inserted through the top port of the gas bomb. Solenoid valves are connected, with close nipples, on opposite ends of the cross. A pressure transducer is connected to the cross and the remaining port is valved and permits calibration of the pressure transducer. A needle valve, used to control the fill rate of the bomb, is located on the gas supply side of the solenoid valve. On the flask side of the other solenoid valve is a precision-bore, bellows-type needle valve. The purpose of this valve is to allow setting the drain rate from the bomb at slightly less than the rate of gas absorption rate within the flask. This is necessary so that the pressure in the flask does exceed a preset maximum before the filling operation is complete.

The bomb is filled with gas from the supply cylinder. The latter is regulated to 50 psig. The maximum bomb fill pressure is set so that the pressure swing in

the bomb during sample addition is large relative to the accuracy limitations of the bomb-pressure transducer. The mass of gas drained from the bomb to the sample flask is related to the initial and final conditions in the bomb. The gas compressibility factor, Z, is determined so an exact gas delivery is made. The gas law relationship with compressibility included is

$$\Delta W = (MV/R)[(P/ZT)_i - (P/ZT)_f] \tag{3-10}$$

where:

ΔW = Mass of gas delivered from bomb
M = Molecular weight of the gas
V = System volume
R = Gas constant
P = Pressure
T = Temperature
Z = Gas compressibility
i,f = Refers to initial and final bomb conditions.

The gas compressibility is calculated from experimental data for the second virial coefficient given by Dymond and Smith (1980). For a pure material the second virial coefficient, B, is approximately a linear function of temperature near room temperature and is independent of pressure. The values of the parameters for the linear correlation function for each of the gases is given in Table 3-4. The virial coefficient and compressibility are related by the expression $Z = 1 + BP/RT$.

The volume of the assembled gas addition system was determined by displacement of water from a burette. The system volume from this method is 338.8 ml. An indirect method of volume determination is also suitable. The indirect method relies on the fact that sulfur dioxide is extremely soluble in polyglycol solvents. In this method, the gas addition bomb is repeatedly filled with sulfur dioxide and drained into a weighed sample flask containing a polyglycol ether solvent. The pressure and temperature are recorded before and after draining the sample bomb to the sample flask. When 5-10 gms of sulfur dioxide has been added to the sample flask, the flask is accurately weighed to

determine the exact amount of sulfur dioxide transferred. The volume of the gas addition system is calculated from the transferred mass of sulfur dioxide, the pressure and temperature readings and the known compressibility data for sulfur dioxide. The volume from the indirect method is 342.7 ml. The deviation between the two methods is 1.1%. The volume based on the direct method (338.8 ml) was used for the calculations presented below.

3.3.4 Data Acquisition & Control Hardware

A concern in selecting the hardware is to maintain maximum flexibility for future applications of the equipment. Refer to **Appendix B.3**, Table 3 for equipment specifications and Figure 3-3 for the layout. The heart of the system is a personal computer with both a serial and parallel communications port. A printer is connected to the parallel port and a software-switchable serial port selector (Black Box) is connected to the serial port. The latter device provides for switching the one serial port from the computer in four different serial ports.

One of these serial ports is connected to an analog-to-digital (A/D) convertor (White Box). This device provides eight (0-5 Vdc) analog inputs and four digital (on/off) outputs. The White Box is a "smart" device with an on-board microprocessor. Since the various input signals (temperatures and pressures) from the experimental equipment are at different voltage levels they must be scaled to 0-5 Vdc before input to the White Box. A signal conditioner (Red Box) electronically scales the input signals for transmission to the White Box. The Red Box also provides electrical isolation for the four digital outputs from the White Box. These outputs drive solid-state relays that operate the solenoid valves (110 VAC). A thermocouple-to-analog converter with cold junction compensation is connected to the thermocouple on the gas bomb and output to the Red Box for further amplification. The temperature in the flask is accurately measured with a thermocouple referenced to an ice bath, the combined signal is amplifed and sent

to the Red Box.

The second serial port from the Black Box is connected to the microprocessor hotplate/stirrer. A heating mantle that accomodates the round-bottom sample flask is connected to the microprocessor-controlled hotplate/stirrer. The latter provides local temperature control of the sample flask. However, the set-point temperature is issued from the personal computer via the Black Box to the hotplate/stirrer. The strategy for heating the sample flask is discussed in Section 3.4.3.

The sample flask is cooled by blowing cold air over it. A solenoid valve, actuated by the Red Box, on the laboratory compressed air line is connected via plastic tubing to a copper (heat exchange) coil. The coil is submersed in an ice bath in an insulated chest. The air lines to and from the coil pass through the lid of the chest. The cold air is blown over the flask from holes in a perforated copper distribution ring that encircles the middle of the flask. With this cooling method, the minimum temperature achieved inside the flask is about 10 ^{o}C. The cold air could be cooled further by using dry ice and methanol instead of ice water in the ice chest. However, even if the supply air were pre-dried to prevent condensation in the cooling coil, moisture in the surrounding air would condense and freeze on the flask. The layer of ice would hinder further heat transfer from the flask. An automated, non-intrusive cooling source below about 10 ^{o}C is difficult to devise.

3.3.5 Measurement Accuracy

There are inherent uncertainties associated with the process of converting an electrical signal from a sensor to a numerical value in a computer. The following is an analysis of these uncertainties working from the computer back to the sensors. Once a signal has been digitized, the only uncertainty in its value is the precision of the computer. This error is unimportant unless one is taking the

difference between measurements which are close in value, but this is not the case here.

The resolution of the A/D conversion (White Box) is 1 part in 20,000. With a maximum input signal of 5 Vdc this represents a resolution of 0.25 mV. Thus, a signal strength of 25 mV or more has less than 1% resolution uncertainty. The linearity of the A/D conversion is equally important. Information on this characteristic is not published by the manufacturer. A simple test showed the non-linearity to be 1% on a 100mv signal and 3% on a 30mV signal. The non-linearity of this conversion decreases rapidly to an insignificant amount for signals above 100 mv. This specification sets the input signal strength to the White Box.

The signal conditioner (Red Box) scales the signal voltage before input to the White Box. The two-signal scaling operations used are amplification and division (by two). Amplification is accomplished with precision instrumentation amplifiers made by Analog Devices (AD524B). These integrated circuits feature extremely low nonlinearity characteristics. Division is accomplished by a resistive divide network followed by a unity-gain op-amp buffer. The division error is adjusted to a trivially low value. Thus, the signal conditioning error associated with the Red Box is less than the errors associated with upstream and downstream equipment. Low voltage signals on the input side to the Red Box are subject to electrical noise. This noise can be picked up on the signal wires (especially if they are long) and thereby generate errors. Great care is taken to provide maximum common-mode noise rejection. The precision of each measurement is described separately below.

The flask temperature is measured with a T-type thermocouple; a similar thermocouple, immersed in an ice bath, serves as the cold junction. The thermocouple wires are kept short (<20cm) and the combined signal amplified by 1000. The amplifier is located next to the reference and measuring thermocouples. This technique is used because the combined signal level before amplification is

very low and easily subject to noise. The amplified signal is input to the Red Box but not amplified further. The signal is digitized and converted to a temperature reading by the software. From measurement to computer, the uncertainty is less than 0.5 ^{o}C over the range of 0-100°C.

The MKS Baratron transducer (Model 222B) has an accuracy of 0.5% of the reading and a temperature coefficient of 0.1 mmHg/^{o}C. The transducer is sensitive to ambient temperature fluctuations. This effect is somewhat dampened by insulating the unit. At low pressure (1 mmHg) the uncertainty in reading the digitized signal from the pressure transducer is set by room temperature changes and, more important by the White Box non-linearity.

The measurement of the temperature of the gas bomb is made with a T-type thermocouple connected to a temperature-to-analog convertor (Omega Inc., TAC-386). This device provides reference junction compensation and conversion to 1mV/^{o}C output. The device was adjusted to give an accuracy of ±0.5 ^{o}C near room temperature.

The pressure transducer on the gas bomb has a precision of ±0.1 psia. Analog division by two in the Red Box does not reduce this precision. However, the non-linearity of the White Box can be a problem if the pressure reading is less than 1 psia. Such a pressure is unlikely in actual operation of the gas addition system.

3.4 EXPERIMENTAL METHOD

3.4.1 Solvent Preparation

The polyglycol solvents are hygroscopic and must be dried before use. The vapor pressures of the solvents were measured and compared to the literature values. The measured vapor pressures were always higher than published values for the pure solvent. The solvents were analyzed (GC) and found to contain 1 to 2 wt% water. The partial pressure for such amounts of water is enough to account for the discrepancy in vapor pressure. The solvents were then boiled and stripped

with dry nitrogen. This procedure reduces the water content to about 0.1 wt%.

3.4.2 Start-Up

The sample flask and headpiece shown in Figure 3-1 were cleaned and dried. The ground glass joints were greased with silicone vacuum grease (except for the top glass ball joint). The flask and stirring bar were weighed without solvent present. Enough solvent was added to the flask to minimize head-space volume without affecting the mixing ability of the stirring bar. This amount was about 80 gms of solvent for the 100 ml flask and about 200 gms of solvent for the 250 ml flask. The 100 ml flask was used for hydrogen sulfide and sulfur dioxide while the 250 ml flask was used for carbon dioxide, propane and n-butane. It was not yet necessary to know the exact amount of solvent at this point. The top ground glass ball joint was then greased and connected to the rest of the apparatus.

The solvent sample was then degassed under vacuum while being stirred and heated. The degassing temperature was set by the volatility of the solvent. If the temperature and heating rate were set too high the solvent boiled out of the flask. The target temperature was set on the hotplate/stirrer such that under the applied vacuum the solvent just began to boil when the target temperature was reached. The target-degassing temperatures for the solvents tested are shown in Table 3-5 and are equipment specific. The degassing step was completed when gas bubbles stopped evolving from the solvent or when the solvent itself appeared to be boiling. After degassing is complete the stopcock on the flask was closed and the flask was cooled to room temperature. The flask was disconnected from the apparatus and the grease was wiped clean from the top ground glass ball joint. The flask was then re-weighed and the exact amount of solvent present determined by difference. After reconnecting the flask to the apparatus, the vapor space above the flask-stopcock was evacuated. The system was then leak

checked by determining whether the pressure within the flask increased over a period of 2 to 5 minutes.

3.4.3 Run Procedure

The following procedure was used for measuring gas solubilities with this equipment. After the solvent was degassed, the system was evacuated and isolated and the stopcock on the sample flask was opened to allow the pressure transducer to measure the system pressure. The stirring rate was set between 600-800 RPM, depending on the solvent. A high rate is prefered, to enhance mass transfer. Some of the solvents are too viscous (e.g. Dowanol TBH, Tetraglyme) and 600 RPM is the maximum attainable mixing rate. At higher rates the magnetic stirring bar decouples. The flask is cooled to 13 ^{o}C by a flow of cold air. Since the solvent contains a small residual of dissolved gas or water, the vapor pressure of the solvent was first measured over the temperature range of interest.

Heat was supplied to the flask by the heating mantle. It was found that steady heating at a rate of 1 ^{o}C/min or slower yielded a reproducible vapor pressure curve. Also, the same curve was retraced upon slow cooling. Flask temperatures and pressures were recorded at 5 ^{o}C intervals from 15 ^{o}C to 100 ^{o}C.

The flask was held at 100 ^{o}C for ten minutes to demonstrate that no further change in pressure would occur, then the heat was turned off and the cooling was started. Since the cooling rate was fast and not controllable, equilibrium was not maintained in the flask during cooling. When the flask temperature reached 13 ^{o}C the cooling was turned off.

Gas was added to the flask in even increments of mass each time after the flask was cooled. An estimate of the final bomb pressure necessary to deliver the desired mass increment of gas was calculated first. This final bomb pressure estimate was calculated by assuming the bomb temperature before and after draining were the same. If the estimated final bomb pressure was less than a

preset allowable minimum pressure then multiple bomb refills were necessary to deliver the specified mass of gas to the sample flask. The gas was slowly drained to the sample flask until the bomb pressure reached the final estimated pressure or the preset minimum pressure. The procedure was repeated until the specified mass of gas was delivered then filling was halted. After waiting about ten minutes to re-establish thermal equilibrium in the bomb, the actual mass delivered was calculated based on measured initial and final conditions. The solvent sample, containing dissolved gas, was heated and cooled in the same manner as used to establish the vapor pressure of the "pure" solvent. The run was completed after the heating and cool down sequence corresponding to the final gas addition.

3.4.4 Shut-Down

After the run was finished, a bath of methanol and dry ice was used to cool down the mixture in the flask. This cooling step maximizes the fraction of the gas in the flask that is dissolved in the solvent. If the solvent froze or became to viscous to stir or the pressure stabilized, then methanol-dry ice bath was removed and the flask stopcock was closed. The flask was heated to room temperature and removed from the apparatus. The top ball joint is wiped free of grease and the outside of the flask wiped free of any condensation. The flask is then weighed to determine the total amount of gas that was added. This total was compared to that calculated from the gas-addition procedure described above. If the difference between the measured and the calculated values was greater than 2% of the total weight of gas, the run is suspect.

3.4.5 Control Algorithm

A flowchart for the control algorithm is shown in Figure 3-4. The same sequence of operations would be followed to conduct the experiment manually. The control program is written in BASIC and is a collection of subroutines that

perform independent tasks that are independent. These tasks are listed below.

(1) Flask heating
(2) Flask cooling
(3) Flask filling
(4) Bomb filling
(5) Estimate final bomb pressure
(6) Compute mass of gas added to flask
(7) Abort and shut-down procedure
(8) Valve opening or closing
(9) Read an input signal

The main program calls these various subroutines and also performs conditional tests to direct the sequence of events. In the heating, cooling, and filling sequences where waiting is involved, it is always necessary to check for temperature and pressure excursions as well as for system errors (such as exceeding disk space). An example of the required input data necessary to execute the control program as well as a complete listing of the control program is included in **Appendix B.5.**

3.4.6 Reproducibility and Limitations

The reproducibility of the total pressure as a function of temperature from repeated runs for the same gas/solvent composition is within 2 %. The major uncertainty is the true temperature of the liquid in the flask. This uncertainty is caused by the thermal lag associated with the glass thermowell. Heat loss via conduction up the glass well results in having a slightly lower temperature (~0.2-0.5 ^{o}C) measured by the thermocouple. The thermal lag is minimized by very slow heating.

The error in composition caused by vapor space hold-up is greater for insoluble gases at low concentrations. For carbon dioxide this uncertainty may be as high as 2%. This effect is quantified in **Appendix B.2.** A sample flask larger than 250 ml is required for gases less soluble than carbon dioxide.

The solvent volatility sets the upper temperature limit. Condensation of solvent vapors in the upper portion of the apparatus changes the composition of

the liquid phase and can plug the gas-addition feed line with liquid. The ability to degas the higher volatility solvents is a more stringent limitation.

The gas addition system produces very reproducible results. The uncertainty is within the accuracy of the balance used to weight the flask (±0.01gm). The accuracy decreases when the pressure swing in the bomb is too small relative to the uncertainty of the pressure transducer. This effect is minimized by reducing the bomb fill pressure so that the pressure swing during sample addition is increased.

3.5 PURE GASES AND SOLVENTS

3.5.1 Results

A sizeable amount of data (about 9000 PTX data points) were collected on the twenty gas-solvent pairs tested. At least three runs per gas-solvent pair were made over the range of 15-100 ^{o}C at 5 ^{o}C intervals. Depending on the gas-solvent pair, between six and eight gas additions were made per run. The range of mole fraction covered for each gas-solvent pair is shown in Table 3-6. No attempt is made to reproduce all of the raw experimental data here. Rather, only the results for hydrogen sulfide-tetraglyme are presented as an example. An actual run print-out, the associated output file, and the necessary input for one of the triplicate runs is given in **Appendix B**. A plot of the logarithm of the total pressure vs. the inverse of the absolute temperature at constant composition for one of the triplicate runs is given in Figure 3-5.

3.5.2 Data Analysis

The combination of Equations 3-3 and 3-4, shown below, relates the fugacity of the solute, f_2, to the system pressure, P, the solvent composition in the liquid phase, x_1, the vapor pressure of the "pure" solvent, P_1^S, and the activity coefficient of the solvent, γ_1.

$$f_2 = P - \gamma_1 x_1 P_1^s \tag{3-11}$$

Since the mole fraction of solvent in these experiments was never less than 0.9, the activity coefficient of the solvent was assumed for simplicity to be unity. Strictly speaking, this assumption is not thermodynamically consistent if the Krichevsky-Ilinskaya equation, Equation (3-7), is assumed for the solute. The value of the solvent activity coefficient could be solved for simulatneously by using Equation (3-5). However, since the solute concentrations were so dilute, the activity coefficient of the solvent was always very close to unity. The error involved in this simplification is discussed below.

The vapor pressure measured for the solvent and its residual content of water and dissolved air between 50-100 ^{o} was fit to the Clapeyron equation. Although solvent vapor pressure data were collected between 15-100 ^{o}C, fitting the data over the higher range proved more reliable. This is because the vapor pressure of these solvents at the lower temperatures approached too closely the sensitivity of the pressure transducer.

Figure 3-6 shows the results for the triplicate runs for H_2S in tetraglyme cast in the form of Equation (3-7). The nearly horizontal slope indicates only minor dependence of f_2 on x_2, i.e., a very small value of A. The value of $\ln(f_2/x_2)$ was linearly regressed against $(x_1^2 - 1)/T$ at constant temperature where (2) denotes the solute and (1) the solvent. The slope is A/R and the y-intercept is $\ln(H_{2,1})$. The values of A/R were generally scattered, with a slight temperature trend. An average value of A/R for the run was fit based on all the data points. This fit is discussed later. The y-intercepts, or $\ln(H_{2,1})$ values, for triplicate runs are plotted against 1/T in Figure 3-7. This curve is nearly linear, so higher order expansions in 1/T are not necessary. The linear variation of the natural log of the Henry's law values with the inverse absolute temperature were fit by linear regression. The smoothed Henry's law values were computed at each data point and the best

value of A/R was determined for all the data points by the method of least squares applied to the equation below:

$$\ln [(f_2/x_2)/H_{2,1}] = (A/R)[(x_1^2-1)/T] \quad (3\text{-}12)$$

The average error was calculated between the experimentally measured and calculated system pressure based on the best value of A/R, the Henry's law expression and the solvent vapor pressure. An average error less than 2% is considered acceptable. The run was was repeated if the average error was greater than 2%. The values of the fitted parameters for the variation of the Henry's law with temperature from the triplicate runs were averaged to determine the uncertainty in the fitted Henry's law constants. This averaging is statistcally valid since the number of gas additions and temperature intervals were the same for each run. The values of A/R varied significantly from run to run. For the hydrogen sulfide-tetraglyme system the average of the best-fit A/R values for triplicate runs is -176 K±18%. This is one of the lowest uncertainties for an A/R value of the gas-solvent pairs tested, some are as high as ±200%. As shown in Figure 3-6, there is little or no dependence on liquid phase non-ideality. The value of A/R for the gas-solvent pairs tested in this study is not meaningful because it is heavily weighted by the uncertainty in the liquid-phase composition. Consequently, all of the data were collected in the Henry's law region and a composition-dependent activity coefficient is not necessary to correlate the data.

For the hydrogen sulfide/tetraglyme system the estimated activity coefficient for the solvent is 0.997. This activity coefficient is based on a value of A/R equal to -176 K, a solute mole fraction of 0.07, a temperature of 15 ^{o}C and Equation (3-5). The assumption of a solvent activity coefficient near unity is valid.

3.5.3 Correlated Results

The correlation of Henry's constant, $H_{2,1}$, with absolute temperature is expressed in terms of the Heat of Solution (ΔH_{soln}) and a reference (25 ^{o}C) Henry's law value ($H^{o}_{2,1}$). This correlating equation is

$$H_{2,1} = H^{o}_{2,1} \ \ EXP[(\Delta H_{soln}/R)(1/T-1/T^{o})] \qquad (3\text{-}13)$$

where T^{o} = 298.15 K. The heats of solution and reference Henry's law values for all the gas-solvent pairs are given in Table 3-7. For comparison purposes, solubilities at 25 ^{o}C are expressed on a mole of gas per mass of solvent basis in Table 3-8. Selectivity of the solvents for the other gases referenced to hydrogen sulfide are shown in Table 3-9.

3.5.4 Discussion

The results from the light gas solubility study were found to be reproducible. That is, the variation of system pressure with temperature and composition from run-to-run for the same gas-solvent system were within 2% of one another. The question of accuracy is addressed in a Section 3.7. The data indicate that for these gases even the highest solute concentration tested is within the Henry's law range. Reduction of the data by use of Equation (3-7) is a reliable method for statistically weighting solubility data over a range of solute concentrations and allowing extrapolation of the data to the infinitely dilute region. The value of the Henry's constant was determined by considering data over a dilute range rather than at the most dilute condition measured. This method of data analysis insured that the higher uncertainties associated with the most dilute results are not overly weighted. The data points corresponding to the lowest concentration of solute have a higher uncertainty associated with them because the vapor-space hold-up error increased at the most dilute condition.

Refer to Table 3-8 for a comparison of the solubilities of hydrogen sulfide

and the other gases in the glymes. When solubility is expressed as moles of gas per mass of solvent, hydrogen sulfide solubility is least sensitive to the solvent homologue. This suggests that solvent-solute association is important for hydrogen sulfide solubility. The number of ether linkages ($-CH_2OCH_2-$), including a contribution from the terminal methyl groups, per unit mass is roughly the same for all the glymes. The slight decrease from diglyme to tetraglyme may be due to an overall decrease in physical solubility. Pure physical solubility is governed by the number of solvent molecules relative to solute molecules in the mixture. Increasing the molecular weight of the solvent molecule decreases the number of solvent molecules present on a mass basis. This fact is observed in the solubility decrease of the other gases in diglyme relative to tetraglyme. For hydrogen sulfide, the solvent-solute association is more important than the size of the solvent molecule. As shown in Table 3-9 the selectivity of tetraglyme for H_2S is not achieved by increasing the solubility of hydrogen sulfide in tetraglyme but by decreasing the physical solubility of the other gases. Referring to Table 3-7, within experimental error, the heats of solution are constant for a given gas-solute in the homologous series of glyme-solvents.

Comparing the mono-ethers to the di-ethers, the heat of solution in the mono-ether is less negative for hydrogen sulfide and carbon dioxide in Dowanol DM and TBH. This is also observed for propane and n-butane in Dowanol DM. The increased heat of mixing is from breaking hydrogen bonds between solvent molecules. The energy to break these bonds comes from the heat of condensation of the solute. The effect is not observed for propane and n-butane in Dowanol TBH. The association between these hydrocarbon gases and the butyl group offsets this effect. Refering to Tables 3-8 and 3-9, the hydrogen bonding character of the monoethers reduces the solubilities of the gases. Comparing Dowanol DM to diglyme, the solubility decrease of carbon dioxide, propane and n-butane is dramatic because these gases rely on pure physical solubility. The

decrease in hydrogen sulfide is not as severe since association between solvent ether-linkages and solute is still present. The selectivity of Dowanol DM for hydrogen sulfide is better than tetraglyme. Comparing Dowanol DM and Dowanol TBH, the increased molecular size of TBH decreases carbon dioxide solubility even further but the butyl group enhances propane and n-butane solubility. Hydrogen sulfide solubility decreases because of the increased solvent molecular size and reduced number of ether linkages per solvent molecule.

In summary, the following conclusions are made pertaining to solvent characteristics. They establish guidelines for "designing" a solvent molecule to a specific gas absorption application.

1. *Hydrogen sulfide solubility is governed predominately by the presence of ether linkages in the solvent molecule.*

2. *Physical solubility of the gases decreases with increased solvent molecule size and weight. Increasing the number of molecules per unit mass increases the physical gas solubility.*

3. *Hydrogen bonding between solvent molecules decreases physical solubility of the gas solute. Hydrogen sulfide is less sensitive than other gases to this effect.*

4. *Alkyl functional groups on solvent molecules increase hydrocarbon solubility.*

5. *High hydrogen sulfide selectivity is achieved by; (a) many ether linkages per molecule (b) terminal hydroxyl groups and (c) large solvent molecules.*

3.6 EFFECT OF WATER

The solubility of light gases in water is lower than in polyglycol ethers. Hence, the solubility of these gases is lower in solvent-water mixtures than in the pure solvent. The magnitude of this decrease in solubility is important since water is added to or generated by chemical reaction in the solvent at certain locations in the UCBSRP.

3.6.1 Procedure

The procedure used to measure pure gas-solvent solubilities is not suitable

when a volatile solvent component such as water is present. A key premise in designing the equipment and procedure is accomodating an essentially non-volatile solvent. At temperatures much above ambient, water vaporizes from solution and condenses on cooler parts of the apparatus. As a result, the water content of the solvent becomes uncertain. About 30 ^{o}C is a practical upper limit for operation without appreciable water loss. To determine the temperature coefficient of solubility, measurements must be made below room temperature. Mass-transfer effects become important at lower temperatures because these solvents become quite viscous. Below 0 ^{o}C, the equilibration time is unacceptably long. The automated cooling system is only capable of lowering the sample temperature to 8 ^{o}C. Since operation of the apparatus in the automated mode is desirable, solubility data were only collected between 10 ^{o}C and 30 ^{o}C.

The effect of water from zero to 6 wt% in the solvent was measured in diglyme and Dowanol DM. These solvents were the least viscous of the five solvents tested in the previous study. Only hydrogen sulfide and carbon dioxide were investigated as solutes in this study. Runs with sulfur dioxide were attempted, but problems with the the gas addition system thwarted furthur attempts. The seats of the solenoid valves, which are made of buna rubber or Viton, swell in the presence of sulfur dioxide. Even when the valve is open the swelled seat does not allow gas flow. Other suitable seat materials are available but must be custom-ordered from the manufacturer.

The sample-preparation procedure used in this study is similar to that described in section 3.4.2. with the following addition. After the solvent is degassed and reweighed, the vacuum is released on the sample flask, the neckpiece removed and a known amount of water is added to the flask. The neckpiece is then replaced and the flask is reconnected to the apparatus and degassed again. However, in this second degassing step the sample is not heated. When the sample begins to boil, under vacuum, degassing is complete. The flask is then removed

and reweighed. Any sample loss is attributed to a reduction in the water content.

3.6.2 Results & Data Analysis

The data were analyzed by the same procedure described in Sections 3.5.2 and 3.5.3, the only difference being that the average molecular weight of the solvent-water mixture was used instead of that of the pure solvent. The correlated results for both solvents with varying amounts of water (up to 6 wt%) and both gases are given in Table 3-10. Each water content represents one run. The Henry's constants at 25 ^{o}C are cast in the form of the mixing rule given in Equation (3-9). Mole fractions are replaced with volume fractions as given. Values for Henry's constants for hydrogen sulfide and carbon dioxide in water at 25°C are reported by Wilhelm et al (1977) as 54.74 MPa/m.f. and 165.8 MPa/m.f. respectively. Henry's constant (for ideal solutions) of the mixture, H_m^*, is calculated as the exponential of the sum of the first two terms in Equation (3-9), again using volume fractions. These results, as well as, the values for the interaction parameter, $a_{1,3}$, are also given in Table 3-10.

3.6.3 Discussion

The negative values for $a_{1,3}$ indicate that the water-solvent mixture exhibits negative deviations from Raoult's law. This is caused by hydrogen bonding between the water and solvent molecules. The variation of the interaction parameter with water content of the solvent is scattered and interpertation is difficult at best. The mixture data are plotted in Figure 3-8 as log of the Henry's law value for the mixture vs. molar volume percent water. A curve of the fitted results and the ideal solution solubility curve is also included. Average values for the interaction parameter are used. As a first approximation, the ideal solution mixing rule is adequate.

3.7 LITERATURE COMPARISON

There is a paucity of information in the open literature on the solubility of gases in glycol ether solvents. The accuracy of the data produced by the light gas solubility apparatus was instead verified by testing two systems for which data were available and comparing the results to literature values. The model systems chosen were propane in dodecane and in hexadecane. These systems were chosen because the boiling points of the solvents are similar to those of the polyglycol ethers. Data on these systems are reported by Hayduk et al. (1972). The results of this comparsion are shown Table 3-12. At the three temperatures reported by Hayduk, in the case of dodecane, agreement varies from 0.97% at 25 ^{o}C 3.61% at 45 ^{o}C. Similar results are found in comparing the solubility of propane in hexadecane. This systematic deviation might suggest a different temperature coefficient for the solubility of propane in either of these solvents. Unfortunately, the data in this reference are the only data available for these systems. A firm conclusion is not possible with only three data points over a limited range of temperature.

Data are reported by Hartel (1985) for the solubility of hydrogen sulfide in tetraglyme. For some unknown reason the tabulated and correlated results presented by Hartel are not in agreement. The data presented here lie between the tabulated and correlated results reported by Hartel. No further attempt was made to reconcile this difference.

Data for Selexol solvent (dimethyl ether of polyethylene glycol) are not available in the open literature. One solubility datum point for this solvent is given by Kohl and Riesenfeld (1979) at 70 ^{o}F. Converting the units to an infinitely dilute solubility yields 11.74 moles of hydrogen sulfide per kg solvent and 1.26 moles of carbon dioxide per kg solvent. At 70 ^{o}F, the results presented here for tetraglyme predict 11.77 and 1.59 for hydrogen sulfide and carbon dioxide respectively. The lower solubility of carbon dioxide in Selexol is probably

caused by the higher molecular weight of this solvent.

3.8 CORRELATION OF SULFUR DIOXIDE DATA

Sulfur dioxide is a key component in the UCBSRP. The solubility of sulfur dioxide in a variety of solvents was measured by Demyanovich (1984). Although, the thermodynamic models chosen in that study do correlate the data, the models are too complicated for use in a numerical simulation of the UCBSRP. Demanyanovich reported that the solubility behavior of sulfur dioxide is non-ideal over wide composition ranges but that Henry's law appeared to correlate the data surprisingly well. This observation suggests the data should be correlated with respect to deviations from Henry's law rather than Raoult's law. The use of Equation (3-7), for correlating gas solubility data, does just that. Although the Two-Suffix Margules equation for the unsymmetrically normalized solute activity coefficient is extremely simple, it is suitable for small deviations from Henry's law. For the gases hydrogen sulfide, carbon dioxide, propane and n-butane concentrations were always well within the Henry's law range and the value of A/R was little more than statistical noise. In the case of sulfur dioxide the value of A/R is expected to be quite important.

The P-T-X data reported by Demyanovich were taken at constant solute concentration but at uneven temperature increments because of the experimental method used. This makes direct application of Equation (3-7) impossible since the values of ln $H_{2,1}$ and A/R must first be determined at constant temperature and then correlated with temperature. A multi-dimensional search is possible once the functional dependence of A/R on temperature is known. However, this dependence is not known *a priori*. Demyanovich reports constants for a two-parameter Antoine equation for sulfur dioxide partial pressure at a fixed solute composition for his data. This allows interpolation of his experimental data at even temperature increments.

Demyanovich's values for the partial pressure of sulfur dioxide over Dowanol DM, diglyme, triglyme and tetraglyme were correlated in the following manner: At a specified temperature the partial pressure (or fugacity) of sulfur dioxide was calculated for each solute composition and cast in the form of Equation (3-7). The values of $\ln(f_2/x_2)$ were linearly regressed against $[x_1^2-1]/T$ yielding values of $\ln H_{2,1}$ and A/R for that temperature. This procedure was repeated at 5 ^oC increments between 25-100 ^oC. As shown in Figure 3-9 and 3-10, the results for sulfur dioxide-Dowanol DM indicate that the log of Henry's law varies linearly with inverse absolute temperature dependence and that A/R varies linearly with temperature. The Henry's law and A/R values were regressed with their respective functionalities. This procedure was repeated for the other solvents. The constants for the correlating equations are shown in Table 3-13 and the solubility of sulfur dioxide at infinite dilution in each of these solvents is given Table 3-14. These simple expressions reproduce the sulfur dioxide partial pressures calculated from Demyanovich's constant composition partial pressure equations. The correlation for sulfur dioxide in tetraglyme is plotted in Figure 3-11 with the data of Albright et al. (1964) for this system. Agreement is good below about 40 mole% sulfur dioxide. This accuracy is adequate for the unit operations encountered in the UCBSRP.

3.9 SUMMARY

The method devised in this study for measuring gas solubility in solvents is reproducible (~2%) when the solvents have a low volatility and the gas-solutes are quite soluble. The technique is well suited to automated data acquisition and control and allows for the collection of large amounts of data. For sparingly-to moderately-soluble gases, the modified Krichevsky-Illinskaya equation describes gas solubility behavior as a function of temperature and composition. The

solubility of hydrogen sulfide in polyglycol ether solvents is enhanced by the presence of ether linkages in the molecule. For the other gases tested, the size and aliphatic character of the solvent molecule are important. The presence of water in the solvent lowers the solubility of the gas and dissolution of the gaseous solute in the solvent-water mixture exhibits negative deviations from Raoult's law. The solubility of a solute gas in a mixture of polyglycol ether and water is related to the binary Henry's constants for solute in pure polyglycol and in pure water. The natural logarithm of the Henry's constant for each pure gas-liquid pair is weighted by the volume fraction of water and polyglycol solvent present in the mixture. The mixing rule is expressed in Equation 3-9. The logarithmic nature of the mixing rule indicates that small amounts (<5wt%) of water do not drastically reduce the capacity of the solvent for absorbing gases. However, this study has not investigated the effect of one dissolved solute on the solubility of another. This effect may be substantial and is worth future investigation.

List of Tables

3-1 Solvents in Gas Solubility Study

3-2 Selected Physical Properities: Solvents

3-3 Selected Physical Properities: Gases

3-4 Parameters for Virial Coefficient Estimate Near Room Temperature

3-5 Solvent Degassing Temperatures

3-6 Solute Composition Range

3-7 Constants for Henry's Law Equation

3-8 Solubility of Gases in Solvents at Infinite Dilution

3-9 Selectivity of Solvents

3-10 Effect of Water on Gas Solubility in Organic Solvents

3-11 Henry's Law Constants for Propane in Heavy Hydrocarbons

3-12 Constants for Sulfur Dioxide Solubility Correlation

3-13 Solubility of Sulfur Dioxide in Organic Solvents at Infinite Dilution

List of Figures

3-1 Equilibrium Cell

3-2 Gas Addition System

3-3 Gas Solubility Measurement System

3-4 Control Algorithm

3-5 Effect of Temperature and Composition on Total Pressure for Hydrogen Sulfide in Tetraglyme

3-6 Plot of Equation 3-7 for Hydrogen Sulfide in Tetraglyme at Constant Temperature for Three Separate Runs

3-7 Effect of Temperature on Henry's Law Constant for Hydrogen Sulfide in Tetraglyme

3-8 Effect of Water on the Solubility of Hydrogen Sulfide and Carbon Dioxide in Diglyme and Dowanol DM

3-9 Effect of Temperature on Henry's Law Constant for Sulfur Dioxide in Dowanol DM

3-10 Effect of Temperature on [A/R] for Sulfur Dioxide in Dowanol DM

3-11 Effect of Composition and Temperature on Partial Pressure of Sulfur Dioxide in Tetraglyme

Table 3-1

SOLVENTS IN GAS SOLUBILITY STUDY

Common Name	Compound
DIGLYME	Diethylene glycol dimethyl ether
TRIGLYME	Triethylene glycol dimethyl ether
TETRAGLYME	Tetraethylene glycol dimethyl ether
DOWANOL DM	Diethylene glycol methyl ether
DOWANOL TBH	Triethylene glycol butyl ether

Table 3-2

SELECTED PHYSICAL PROPERITIES: SOLVENTS

Solvent	MW	TB	PVAP	DENS	VISC	SOLP
Diglyme	134.2	162	373.	0.944	2.0	8.2
Triglyme	178.2	216	4.67	0.986	3.8	9.0
Tetraglyme	222.3	275	<1.33	1.013	4.1	9.5
Dowanol DM	120.1	194	33.3	1.015	3.5	10.7
Dowanol TBH	231.1	283	<1.33	0.995	9.2	9.6

N.B. MW = Molecular weight
TB = Normal Boiling Point (^{o}C) at 1 atm
PVAP = Vapor pressure (Pa) at 25 ^{o}C
DENS = Liquid density (gm/cc)
VISC = Liquid viscosity (cp)
SOLP = Solubility parameter $(cal/cc)^{\frac{1}{2}}$

Source: *The Glycol Ethers Handbook*, Dow Chemical Co.
Glycol Diethers: Technical Data Bulletin, SpecialityChem Products Corp.
Glymes: Technical Data Bulletin, Grant Chemical Division, Ferro Corp.

Table 3-3

SELECTED PHYSICAL PROPERITIES: GASES

Gases	MW	TB	PVAP	TC	SOLP
Hydrogen Sulfide	34.08	-60.4	2019.1	100.0	
Carbon Dioxide	44.01	-78.5	6401.1	31.0	6.0
Propane	44.09	-42.1	944.2	96.6	6.4
n-Butane	58.12	-0.5	246.3	152.0	6.8
Sulfur Dioxide	64.06	-10.2	389.6	157.6	

N.B. PVAP = Vapor pressure (kPa) at 25 ^{o}C
TC = Critical temperature (^{o}C)
SOLP = Solubility Parameter $(cal/cc)^{\frac{1}{2}}$

Table 3-4

PARAMETERS FOR VIRIAL COEFFICIENT
ESTIMATE NEAR ROOM TEMPERATURE (25 ^{o}C)

$$B = mT + b$$

Gas	Slope (m)	Intercept (b)
Hydrogen Sulfide	1.70	-714.4
Carbon Dioxide	0.93	-401.7
Propane	2.66	-1179.6
n-Butane	5.90	-2492.0
Sulfur Dioxide	4.40	-1737.9

N.B.: B = Second Virial Coefficient [cc/gmole]
T = Temperature [K]

Table 3-5

SOLVENT DEGASSING TEMPERATURES

Solvent	T (^{o}C)
Diglyme	35- 40
Triglyme	60- 65
Tetraglyme	95-100
Dowanol DM	60- 65
Dowanol TBH	95-100

Table 3-6

SOLUTE COMPOSITION RANGE
(mole fraction)

	Solute			
Solvent	H_2S	CO_2	C_3	C_4
Diglyme	.0050-.050	.0016-.015	.0034-.016	.0046-.027
Triglyme	.0061-.060	.0020-.020	.0040-.020	.0063-.037
Tetraglyme	.0070-.070	.0025-.025	.0050-.025	.0079-.045
Dowanol DM	.0040-.040	.0014-.012	.0027-.013	.0040-.024
Dowanol TBH	.0080-.080	.0026-.019	.0052-.026	.0079-.046

Table 3-7

CONSTANTS FOR HENRY'S LAW EQUATION

$$H_{2,1} = H^{o}_{2,1} \; EXP[(\Delta H^{soln}/R)(1/T-1/T^{o})]$$

Solvent	$H^{o}_{2,1}$ (kPa/m.f.)	ΔH^{soln} (kJ/mole)
	Hydrogen Sulfide	
Diglyme	634.8	-17.43 ± 1.8%
Triglyme	513.5	-17.85 ± 3.4%
Tetraglyme	422.3	-18.77 ± 0.4%
Dowanol DM	843.4	-16.16 ± 1.0%
Dowanol TBH	604.9	-15.11 ± 1.7%
	Carbon Dioxide	
Diglyme	3667.	-11.46 ± 1.7%
Triglyme	3400.	-11.40 ± 0.2%
Tetraglyme	3002.	-11.39 ± 4.0%
Dowanol DM	6476.	-10.40 ± 2.5%
Dowanol TBH	3708.	-10.33 ± 0.6%
	Propane	
Diglyme	2157.	-11.11 ± 3.1%
Triglyme	2176.	-11.02 ± 1.1%
Tetraglyme	2142.	-10.30 ± 2.0%
Dowanol DM	5755.	- 9.44 ± .02%
Dowanol TBH	1955.	-11.76 ± 0.2%
	n-Butane	
Diglyme	719.1	-15.42 ± 0.3%
Triglyme	726.5	-15.17 ± 0.5%
Tetraglyme	723.0	-14.97 ± 0.4%
Dowanol DM	2120.	-13.92 ± .08%
Dowanol TBH	678.9	-16.29 ± 0.7%

N.B.: $H^{o}_{2,1}$ = Henry's Law value at T^{o} = 298.15 K

m.f. = mole fraction

Table 3-8

SOLUBILITY OF GASES IN SOLVENTS
AT INFINITE DILUTION

[gmoles gas/kgm solvent]/MPa @ 25 °C

Solvent	H_2S	CO_2	C_3	n-C_4
Diglyme	11.74	2.03	3.46	10.36
Triglyme	10.93	1.65	2.58	7.72
Tetraglyme	10.65	1.50	2.10	6.22
Dowanol DM	9.87	1.29	1.45	3.93
Dowanol TBH	7.15	1.17	2.17	6.37

Table 3-9

SELECTIVITY OF SOLVENTS

(Ratio of Solubilities)

[mole H_2S/mole gas] @ 25 °C

Solvent	H_2S	CO_2	C_3	n-C_4
Diglyme	1	5.8	3.39	1.13
Triglyme	1	6.62	4.24	1.42
Tetraglyme	1	7.10	5.07	1.71
Dowanol DM	1	7.65	6.81	2.51
Dowanol TBH	1	6.11	3.29	1.12

Table 3-10

EFFECT OF WATER ON GAS SOLUBILITY
IN ORGANIC SOLVENTS

W%	V%	H_m	H_m^*	ΔH_{soln}	$a_{1,3}$
		Dowanol DM-Carbon Dioxide			
1.05	1.049	6780	6538	-12.17	-3.5
1.06	1.059	6821	6540	-12.17	-4.0
2.52	2.450	7784	6845	-11.60	-5.4
4.06	3.840	8622	7163	-11.38	-5.0
5.12	4.754	9573	7380	-11.11	-5.7
		Diglyme-Carbon Dioxide			
0.99	0.989	3974	3902	-12.50	-1.9
1.97	2.081	4166	4067	-13.14	-1.2
2.97	3.332	4726	4265	-10.92	-3.2
3.95	4.717	4934	4494	-11.97	-2.1
5.99	8.261	5788	5140	-12.22	-1.6
		Dowanol DM-Hydrogen Sulfide			
1.14	1.137	1059	943	-18.54	-10.3
2.11	2.067	1175	980	-18.19	-9.0
3.01	2.901	1224	1014	-18.10	-6.7
4.18	3.945	1359	1058	-18.20	-6.6
6.00	5.487	1558	1128	-17.34	-6.2
		Diglyme-Hydrogen Sulfide			
1.00	1.000	619	642	-19.93	3.7
2.10	2.235	673	679	-19.49	0.4
3.00	3.372	723	714	-19.27	-0.4
4.05	4.868	792	764	-19.30	-0.8
5.96	8.201	900	887	-19.65	-0.2

N.B.: W% = Weight percent water in the solvent.
V% = Molar volume percent water in the solvent.
H_m = Henry's law value (measured) for the mixture at 25°C.
H^*_m = Henry's law value (calculated) for an ideal solution mixture at 25 °C.
ΔH_{soln} = Heat of Solution (kJ/gmole) for the mixture.
$a_{1,3}$ = Interaction parameter.

Table 3-11

HENRY'S LAW CONSTANTS FOR
PROPANE IN HEAVY HYDROCARBONS

(kPa/mole fraction)

	Dodecane			Hexadecane		
T (^oC)	25	35	45	25	35	45
Hayduk (1972)	824	1003	1219	762	930	1131
This Work	816	985	1175	775	926	1096
% Dev.	0.97	1.79	3.61	-1.68	0.43	3.09

Table 3-12

CONSTANTS FOR SULFUR DIOXIDE
SOLUBILITY CORRELATION

$$H_{2,1} = H^o_{2,1}\ EXP[(\Delta H^{soln}/R)(1/T-1/T^o)]$$

$$(A/R) = (A/R)_o + (T-T^o)(A/R)_1$$

Solvent	$H^o_{2,1}$ (kPa/m.f.)	ΔH^{soln} (kJ/mole)	$(A/R)_o$ (K)	$(A/R)_1$
Diglyme	19.46	-39.43	-587.14	3.0111
Triglyme	19.12	-38.15	-417.01	0.9146
Tetraglyme	16.96	-35.65	-463.63	-0.2593
Dowanol DM	31.15	-37.13	-590.50	2.5638

N.B.: T^o = 298.15 K

Table 3-13

SOLUBILITY OF SULFUR DIOXIDE IN ORGANIC
SOLVENTS AT INFINITE DILUTION

[gmoles Gas/Kgm Solvent]/MPa @ 25^oC

Solvent	Solubility
Diglyme	383
Triglyme	293
Tetraglyme	265
Dowanol DM	267
Dowanol TBH	----

FIGURE 3-1

Equilibrium Cell

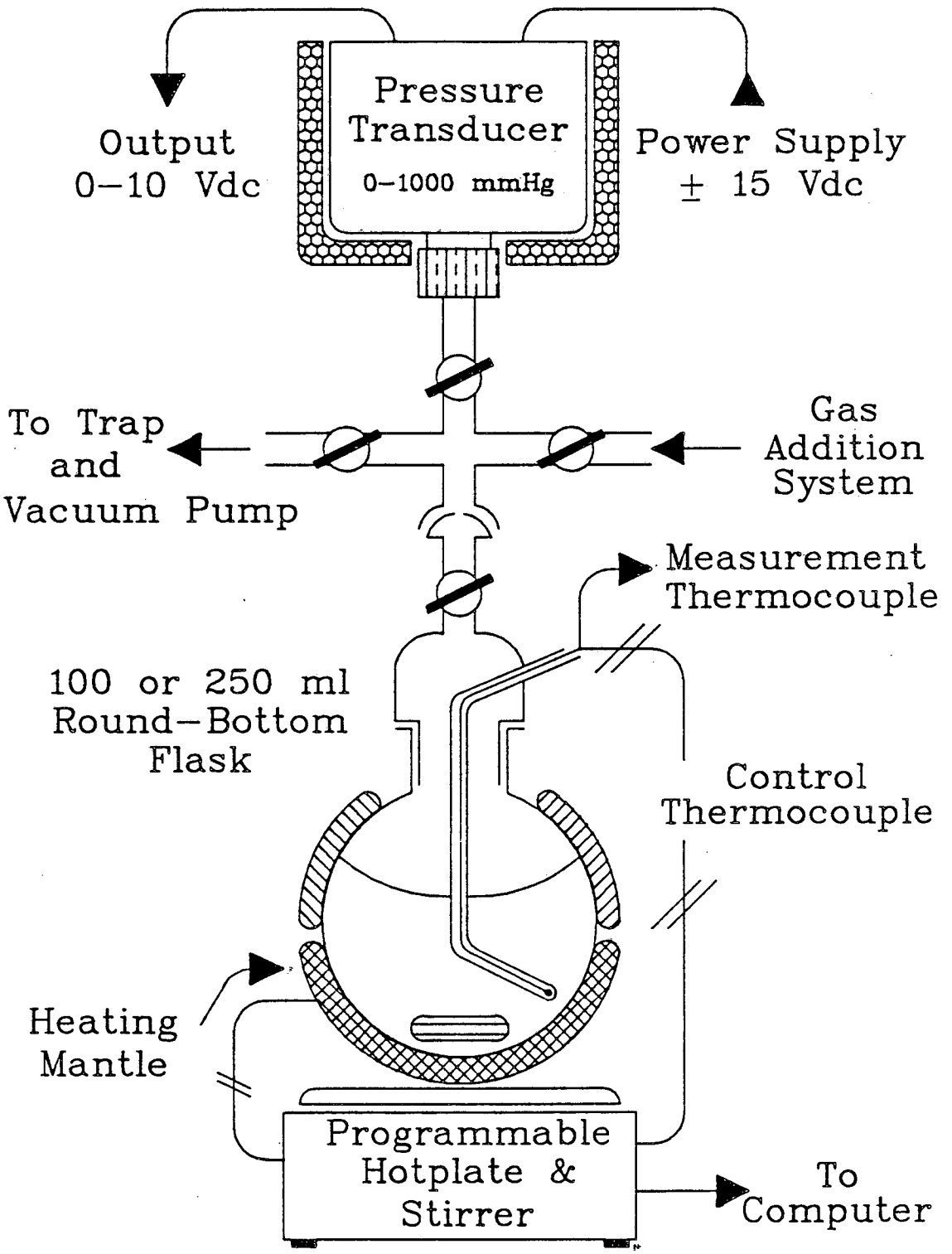

FIGURE 3-2
Gas Addition System

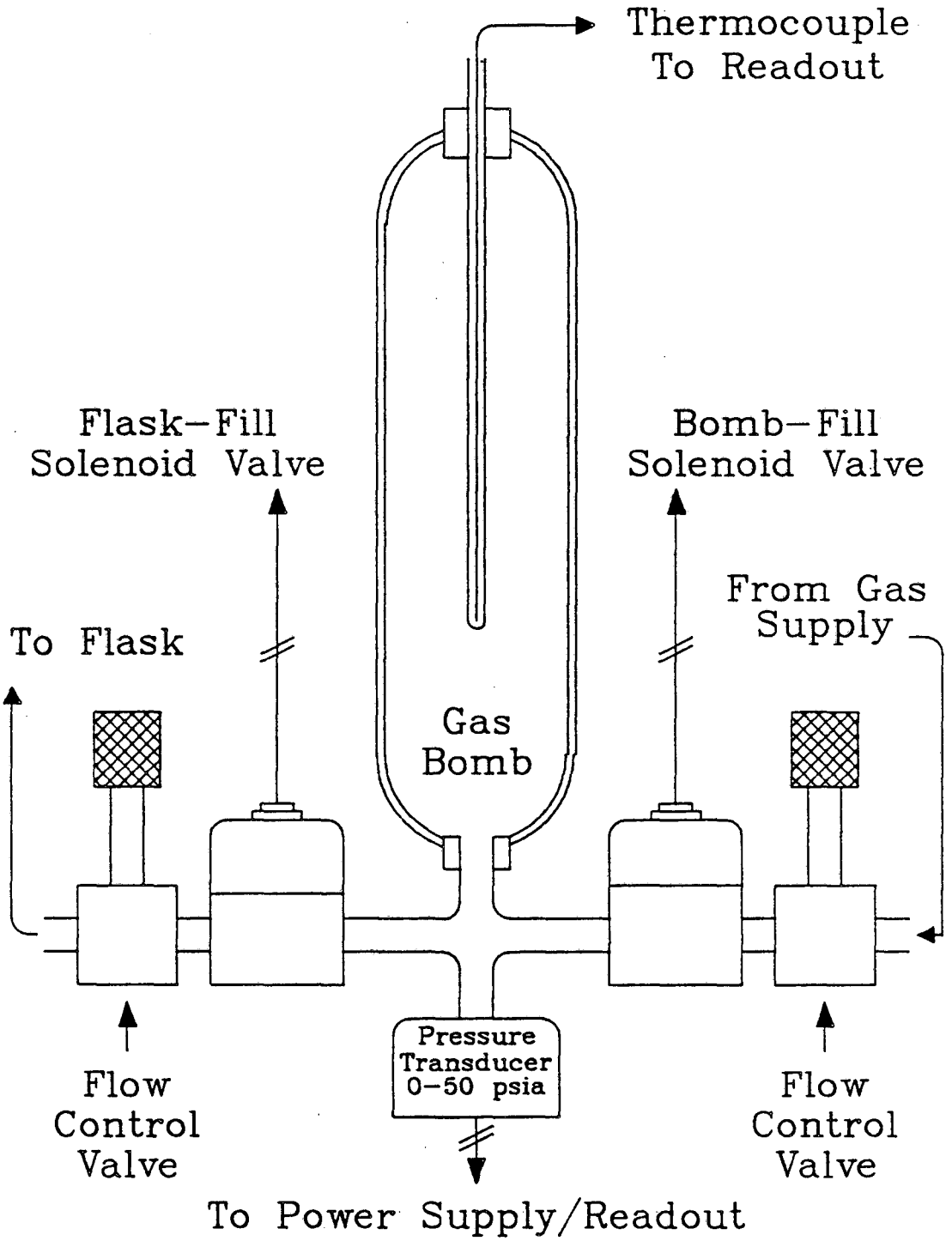

FIGURE 3-3

Gas Solubility Measurement System

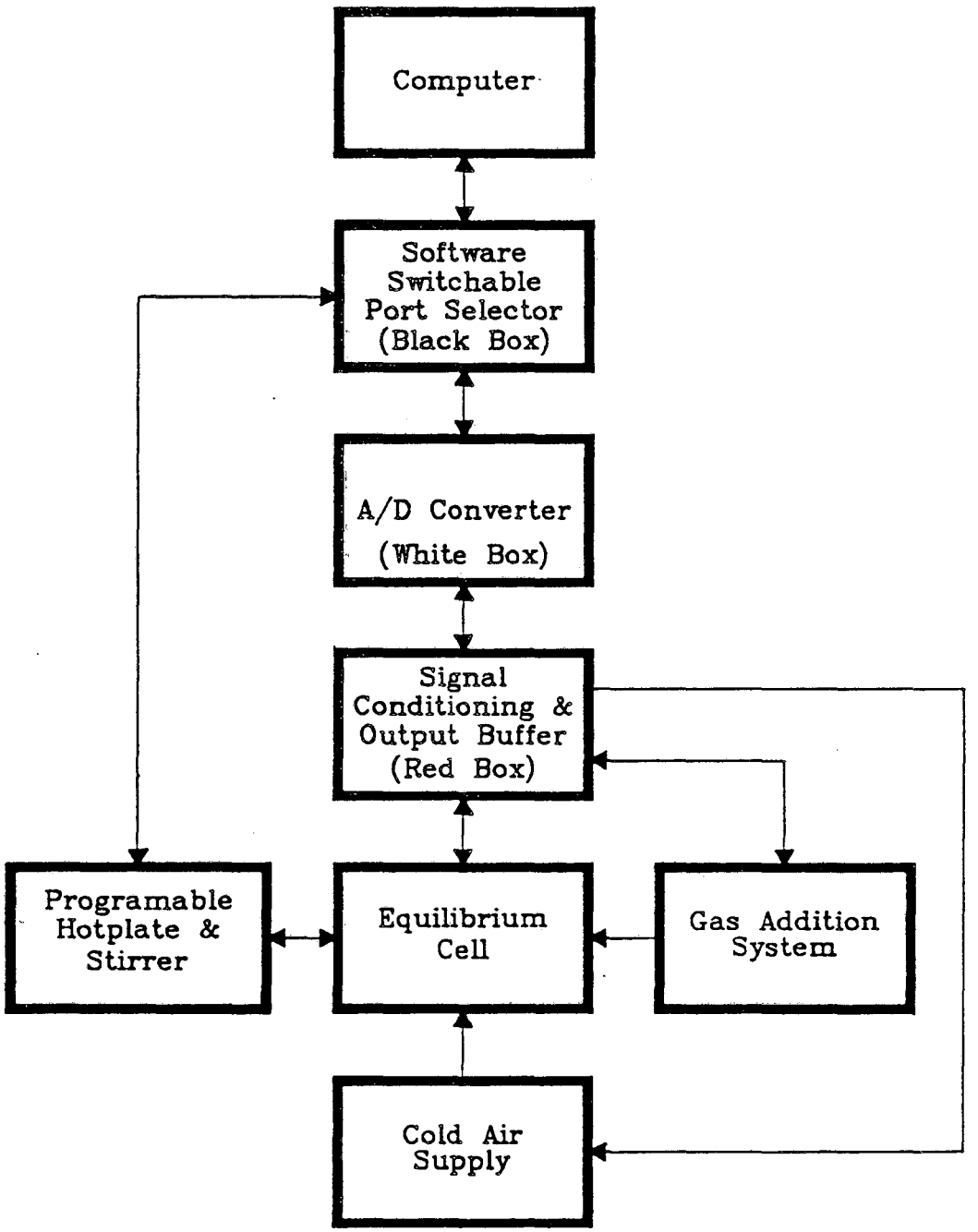

FIGURE 3–4
Control Algorithm

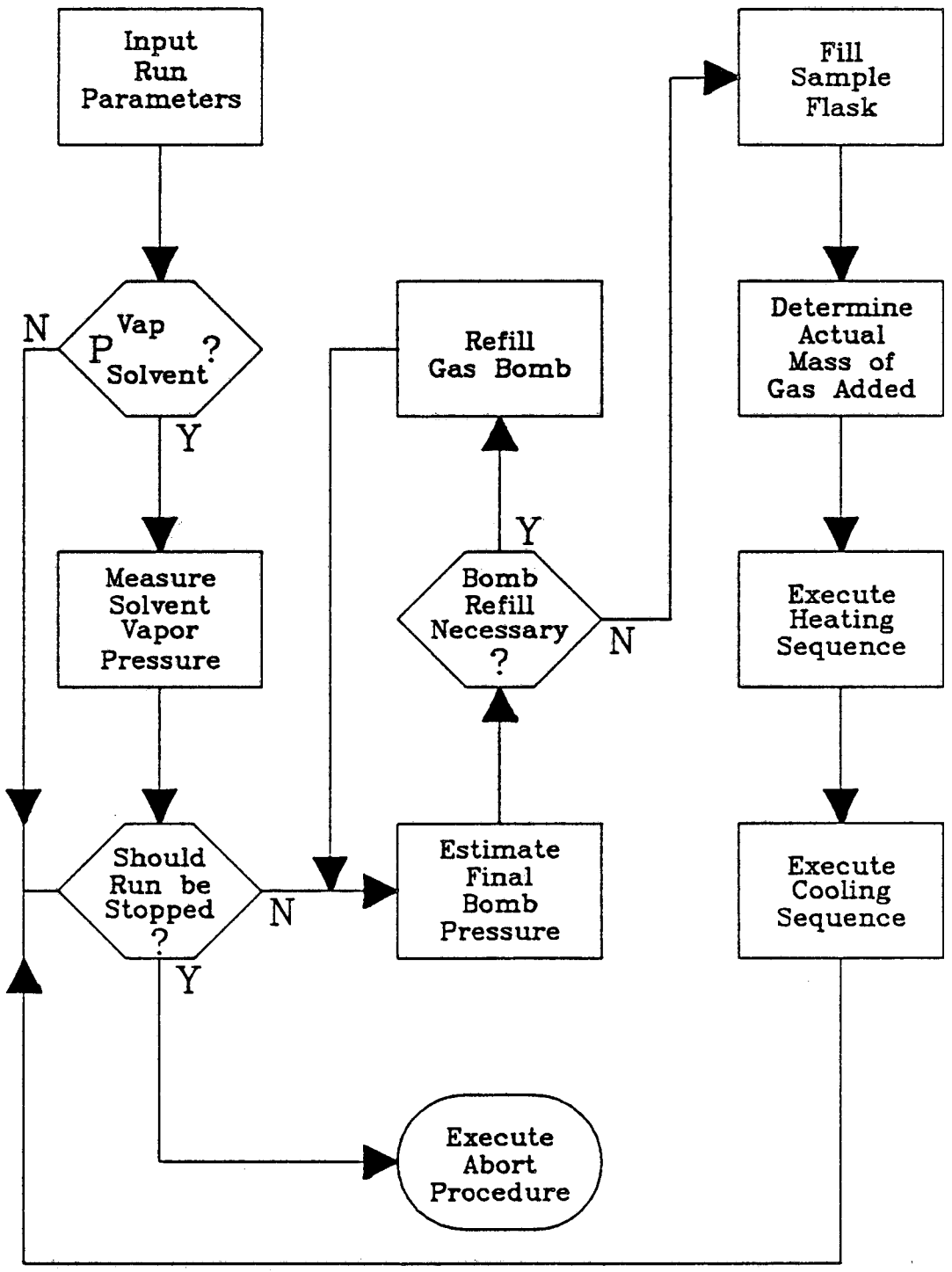

FIGURE 3-5

Effect of Temperature and Composition on Total Pressure for Hydrogen Sulfide in Tetraglyme

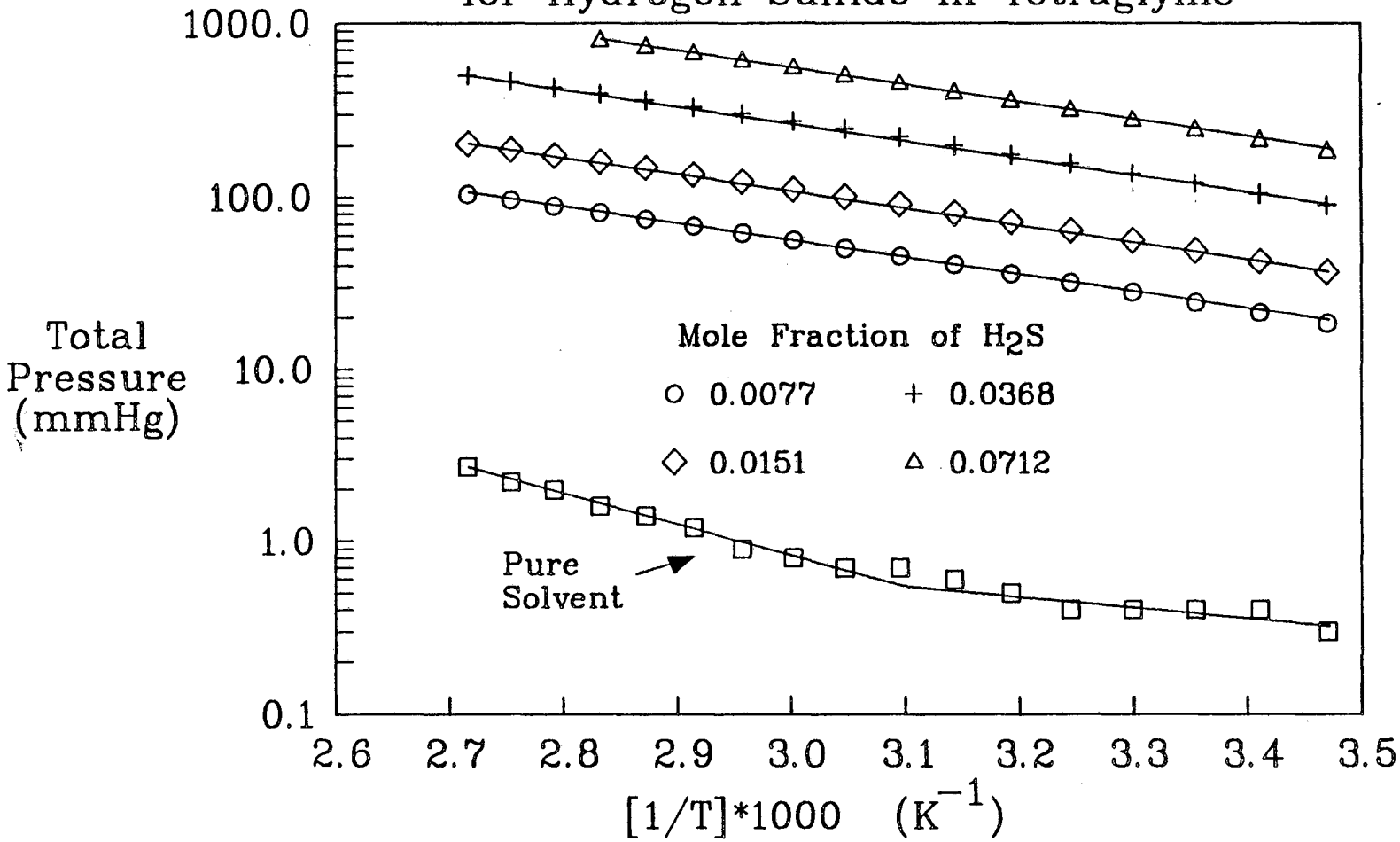

FIGURE 3–6

Plot of Equation 3–7 for Hydrogen Sulfide in Tetraglyme at Constant Temperature for Three Separate Runs

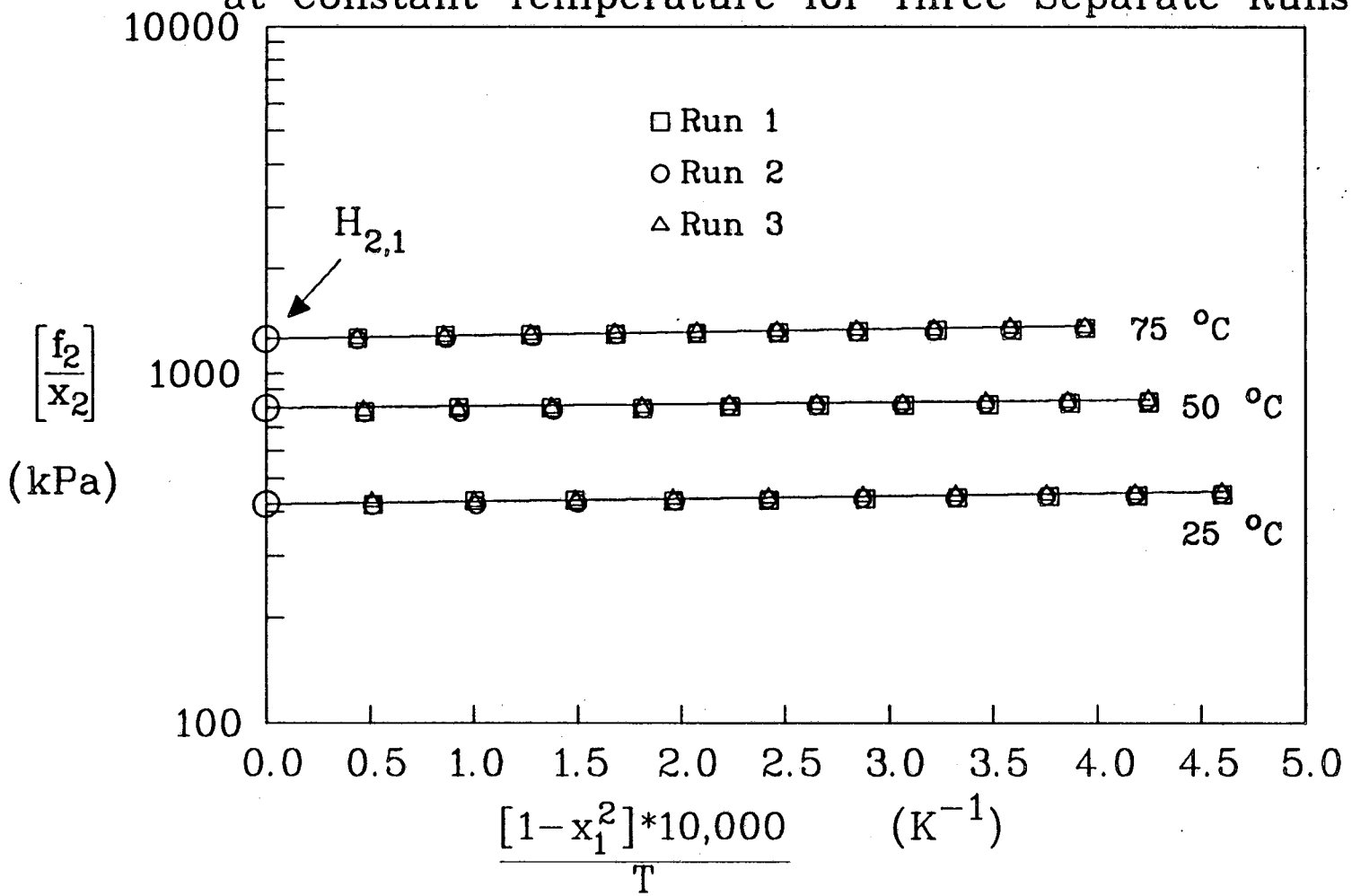

FIGURE 3–7

Effect of Temperature on Henry's Law Constant for Hydrogen Sulfide in Tetraglyme

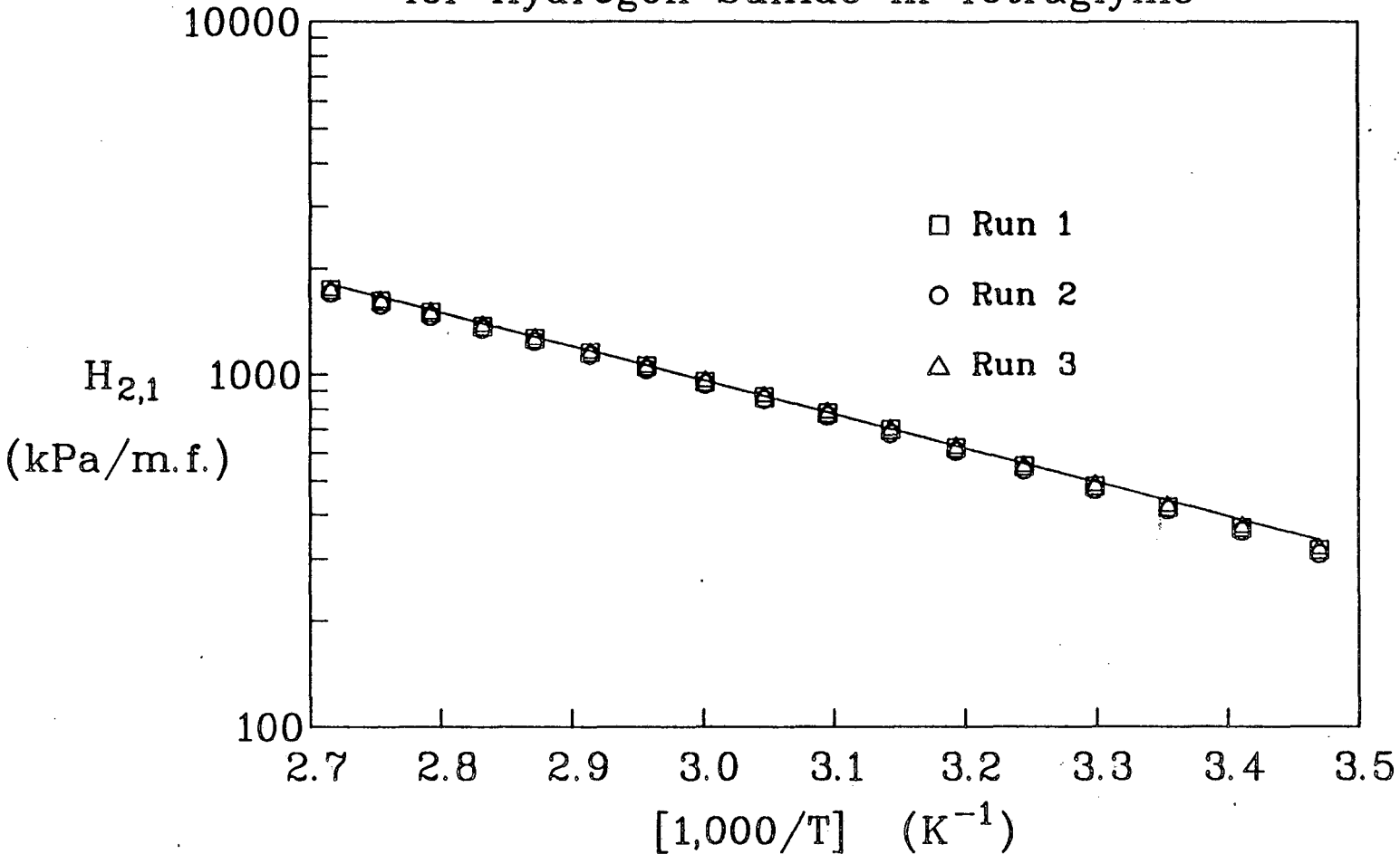

FIGURE 3–8

Effect of Water on the Solubility of Hydrogen Sulfide and Carbon Dioxide in Diglyme and Dowanol DM

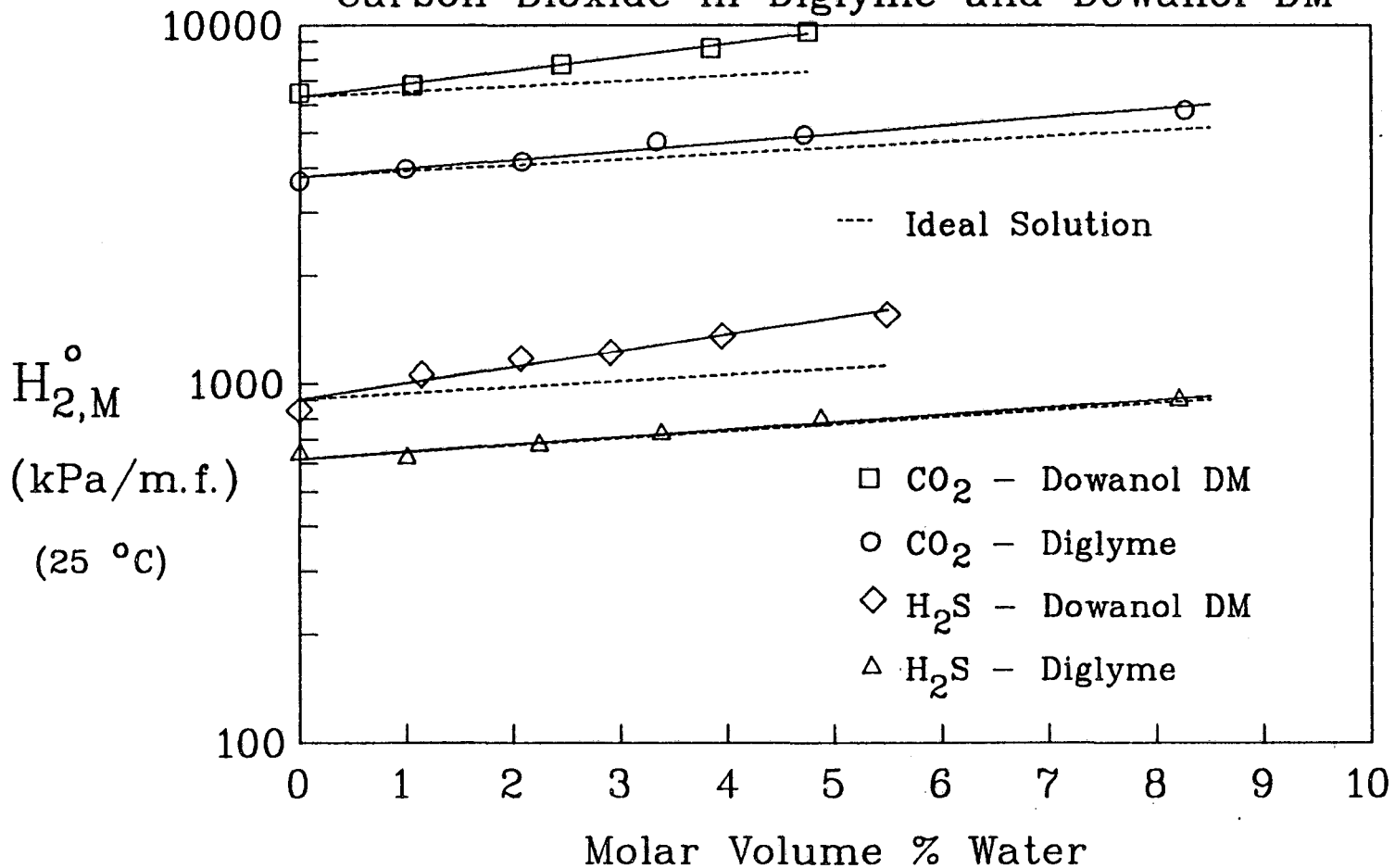

FIGURE 3–9

Effect of Temperature on Henry's Law Constant for Sulfur Dioxide in Dowanol DM

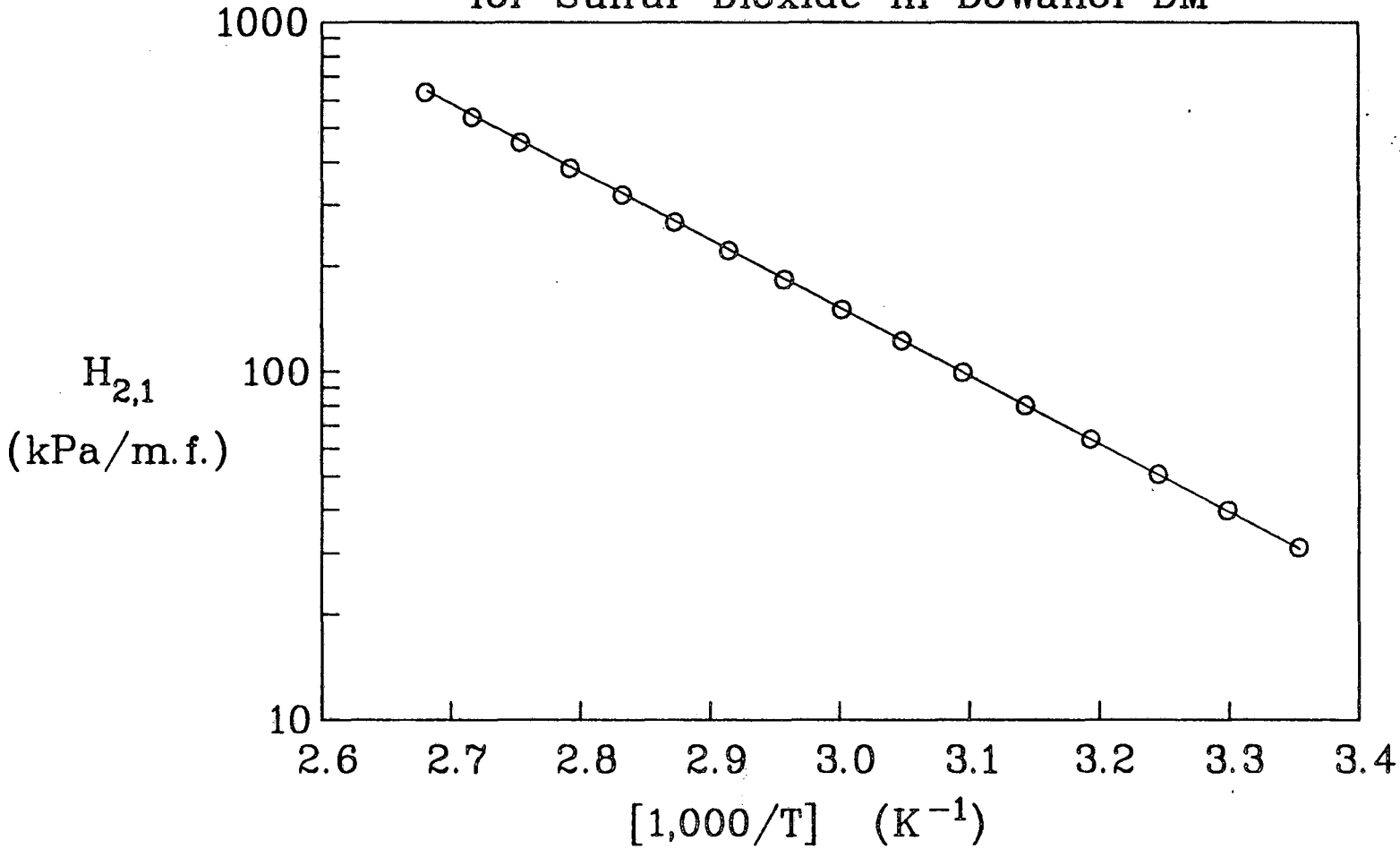

FIGURE 3–10

Effect of Temperature on [A/R] for Sulfur Dioxide in Dowanol DM

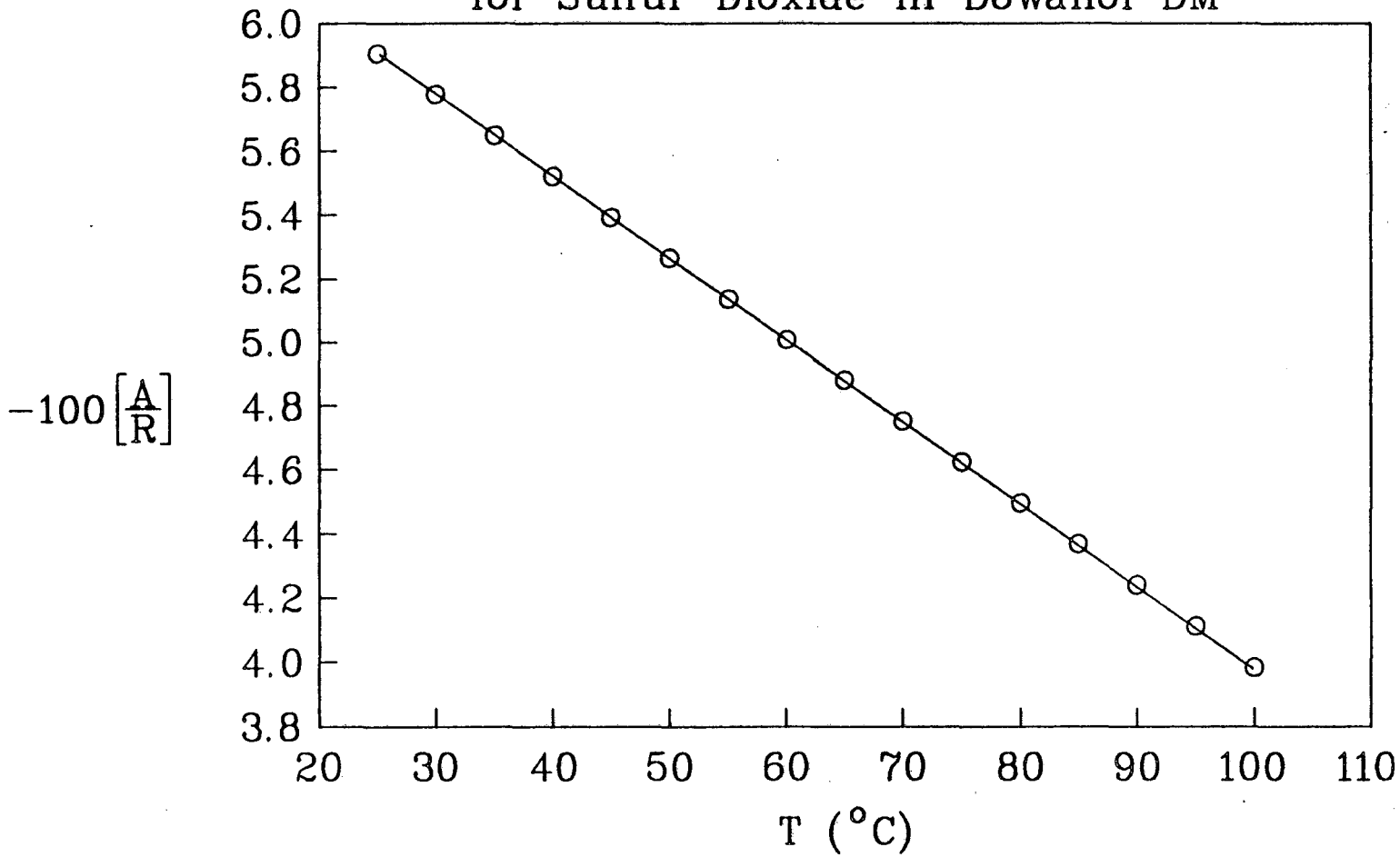

FIGURE 3–11

Effect of Composition and Temperature on Partial Pressure of Sulfur Dioxide in Tetraglyme

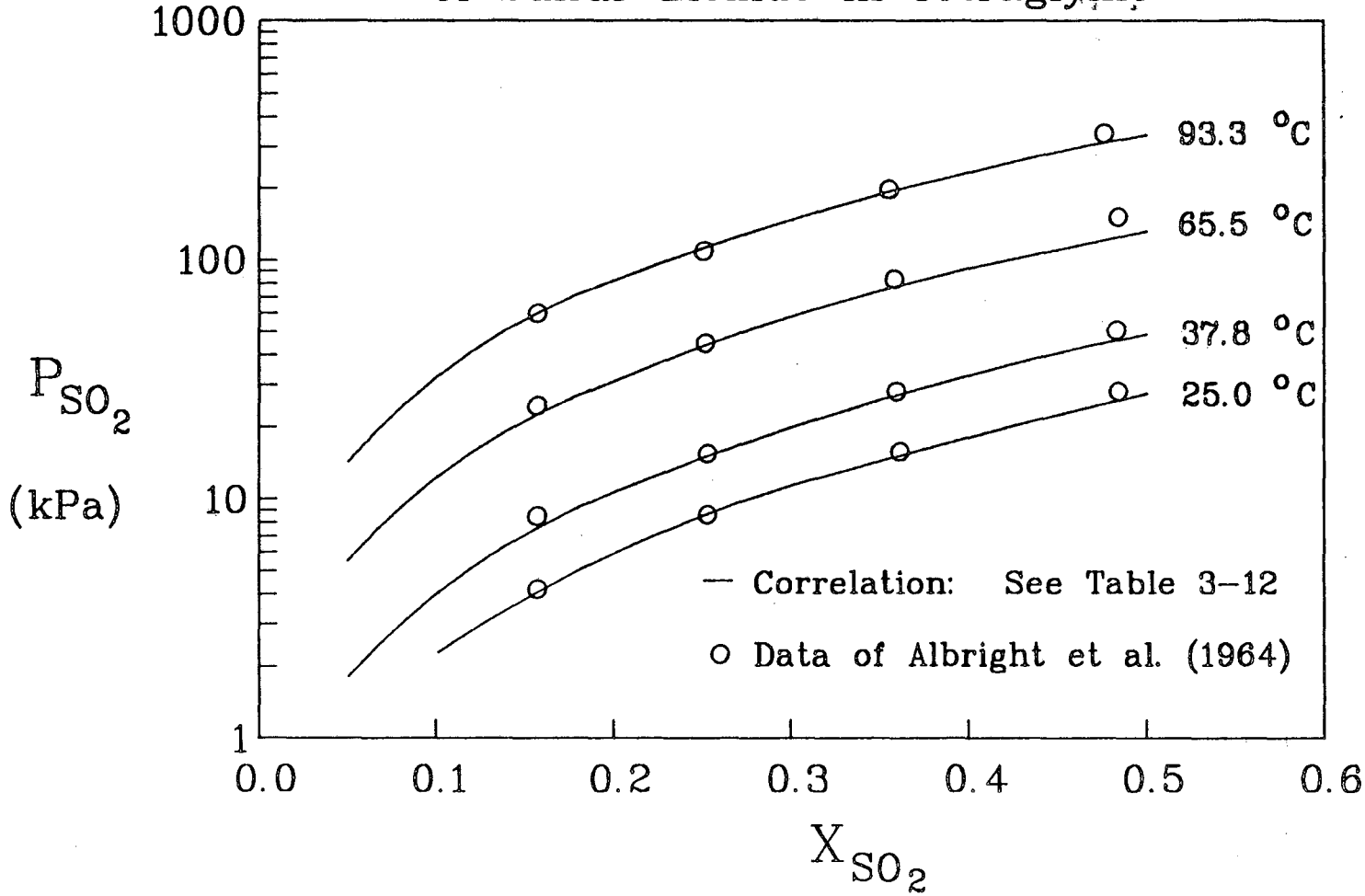

CHAPTER 4
PROCESS SYNTHESIS

4.1 PREFACE

The University of California, Berkeley, Sulfur Recovery Process (UCBSRP) technology is applicable to a wide variety of gas streams containing hydrogen sulfide (H_2S). The application of the UCBSRP to treatment of recycle gas from a crude oil residuum hydrotreater and to a coal gasification stream have been discussed, respectively, by Lynn et al (1986) and by Neumann (1986). The focus of this work is the treatment of sour natural gas for conditioning to sales pipeline specifications. The conditioning process entails dehydration, desulfurization and recovery of natural gas liquids (propane and higher hydrocarbons). The conventional approach is sequential processing to meet each specification.

In this study the performance of the conventional processing scheme shown in Figure 4-1 is used as a point of reference. In this scheme sour gas is cooled and separated into sour gas and sour liquid condensate streams at available cooling source temperature and pipeline pressure. The sour liquid condensate is fed to a depropanizer producing sweet C_4^+ product and a sour C_3^- gas stream. No mercaptans are assumed present, so additional treatment of the C_4^+ product is unnecessary. The sour overhead product is combined with the sour gas from the "knockout drum" (gas-liquid separator) and fed to an ethanolamine absorber-stripper operation. The acid off-gas from the stripper is converted to elemental sulfur in a Claus plant and the tail gas sweetened to meet emission standards in a Beavon-Stretford plant. The sweet, water-saturated, hydrocarbon-rich gas from the ethanolamine plant is fed to an absorber-stripper circulating triethylene glycol (TEG) to effect gas dehydration. Finally, hydrocarbons are recovered in a low temperature separation (LTS) plant. Overall C_3^+ recovery for this processing scheme is typically 65-75%.

The duplication of equipment in this approach suggests that an integrated processing scheme has a potential for savings in both capital and operating costs. This study does not include the sizing and costing for either the conventional processing scheme or the UCBSRP. Only the technical feasibility of applying the UCBSRP technology to natural gas conditioning is investigated. The sizing of the stream flows for a feasible process configuration and an estimation of the requirements and costs of the major process utilities have been included for their usefulness in indentifying areas of potential improvement .

4.2 DESIGN BASIS

A flow basis of 4986 kmole/hr (100×10^6 SCFD) of a natural gas stream containing sour condensate is taken in this study. The composition analysis, temperature, and pressure of the feed gas stream are shown in Table 4-1. The gas stream is rich in propane and higher carbon numbers and is representative of off-shore California production. The product specifications are shown in Table 4-1. The objective of this process synthesis is to meet these specifications while minimizing energy usage, capital equipment, and solvent losses. a further objective is to design a process that will be stable with respect to moderate variations in gas composition and flow.

4.3 SOLVENT & CATALYST SELECTION

The results of the gas solubility studies indicate that diglyme is the best solvent for the co-absorption of hydrocarbon gases. However, diglyme is not the solvent of choice because of the following considerations. Diglyme is the most volatile solvent of the solvents tested in the gas solubility study. Since diglyme is miscible with water, a water-wash section at the top of an absorber is a method to minimize the loss of solvent vapor. However, because of the dehydration requirement of the sales gas stream, the water wash technique cannot be applied

to the primary absorber. The efficient separation and recovery of the heavier hydrocarbons from the solvent necessitates that the solvent volatility be much less than that of the heavier hydrocarbons. If this situation is not the case, an additional fractionation operation is required to recover solvent lost to the hydrocarbon phase. Furthermore, diglyme and water form an azeotrope. Removal of diglyme-free water is not possible in a simple fractionation. These additional considerations suggest that a higher-boiling, lower-volatility solvent is desirable. An additional reduction in the solvent vapor pressure is accomplished by refrigeration of the solvent. Assumed in this design is a bulk solvent of refrigerated (10 ^{o}C) tetraglyme containing 3-pyrdiylcarbinol as the homogenous liquid phase catalyst. A catalyst concentration of 0.1 wt% is sufficient to insure a second-order rate constant of 100 m^3/kmole/sec (Neumann, 1986). Selected physical properities for the bulk solvent and catalyst are given in Table 4-2.

4.4 PROCESS DESCRIPTION

The process flowsheet shown in Figure 4-2 was developed with the aid of the UCBSRP flowsheet simulator. Stream flows and conditions are given in Table 4-3. The list of major equipment is given in Table 4-4. Refer to Appendix C for a description of the simulation model and the detailed results. Each section of the process is described below.

4.4.1 *Sour Condensate Separation*

The sour natural gas is pressured to 50 bar and sour liquid is separated at 35 ^{o}C in knockout K-2. The sour overhead gas from K-2 is chilled to 10 ^{o}C (by H-1) for additional liquid separation in knockout K-3. Both sour condensate streams are combined and flashed to 30 bar in separator K-1 for bulk removal of methane and ethane. The flash gas from K-1 contains 35 % of the C_2^- and 2 % of the C_3^+. The flash gas is compressed and returned to the sour gas inlet. The sour liquids

from K-1 are throttled to 22 bar providing 468 kW_t (133 tons) of cooling capacity between 14 ^oC and 25 ^oC which is recovered through heat exchanger H-2. Some of this refrigeration is available to chill the overhead gas feed to K-3. The sour liquid from K-1 is sent to depropanizer T-2.

4.4.2 *Primary Absorber*

The primary absorber, T-1, is divided into two sections each containing five theoretical trays. Chilled sour gas enters the bottom of the first section and is contacted at 50 bar with cold (10 ^oC) recycle solvent fed midway up the column. Substantially all of the hydrogen sulfide and some of the higher hydrocarbons are absorbed by this solvent stream. The recycled solvent contains a low concentration of sulfur dioxide. Simultaneous absorption and reaction of H_2S with SO_2 provides a substantial driving force for H_2S removal. The sulfur produced by the reaction does not exceed the sulfur solubility in the solvent. The H_2S content in the vapor midway up the column is less than 1 ppm. The top section of the column is fed with a small amount of cold, lean solvent that serves to reabsorb any SO_2 that has been stripped from the solvent, leaving less than 1 ppm in the exiting vapor. The temperature at the top of the column sets the solvent content of the exiting vapor at 6.5 ppm. The water content of the exiting vapor is 92 ppm. The temperature of the solvent exiting T-1 is increased 6 ^oC by the heat of solution of the co-absorbed hydrocarbons.

4.4.3 *Reactor/Crystallizer & Settler*

The H_2S-laden solvent stream exiting the primary absorber is combined with solvent containing SO_2 from secondary absorber, T-3, and from the SO_2 absorber. Sufficient SO_2 solution is added to react with all but 5% of the total amount of H_2S entering the process. The combined streams are fed to the primary reactor/crystallizer, V-1. A reactor volume of 259 gallons is necessary for 99.999% of the entering SO_2 to react. The excess H_2S is maintained because, first,

it is impractical to try to attain exact stoichiometric ratio between the two reactants; second, exact stoichiometry would necessitate a huge reactor volume because the reaction is first-order in both reactants; and, third, the residual H_2S (being less soluble) is easier to strip from solution than residual SO_2 would be. The solvent stream from V-1 (containing sulfur, both dissolved and precipitated) is flashed to 22 bar in separator, K-4, to remove part of the H_2S and hydrocarbons at this intermediate pressure. The bottom liquid is combined with "compressor drips", cooled to 10 ^oC (by H-4) and flashed to 1.2 bar in the sulfur settler, K-6. Wet vapor from the solvent stripper, T-4, is combined with overhead flash gas from K-6 and compressed to 6.5 bar. The condensate from intercooler H-5 is collected in knockout K-5 for recycle back to K-6. The interstage knockout is necessary to minimize solvent losses. The vapor from K-5 is further compressed to 22 bar (by C-3) and combined with flash gas from K-4. The combined stream is then sent to the depropanizer, T-2. The H_2S content of this stream is monitored and the SO_2 flow to V-1 is adjusted to maintain a set-point value.

4.4.4 *Solvent Recycle*

Approximately 81% of the clear solvent from the sulfur settler, K-6, is recycled to the primary absorber, T-1. A fixed flow of solvent containing SO_2 is metered into the solvent recycle stream and fed to solvent recycle reactor, V-2. This vessel provides the necessary residence time (528 gallons) to insure complete reaction (99.99%) of the H_2S. The added solvent containing SO_2 represents a slight excess of SO_2 and insures insignificant back pressure of H_2S in the middle of T-1. The solvent recycle stream is returned to T-1 by pump, P-2.

4.4.5 *Sulfur Separation*

A 50 wt% sulfur-solvent slurry from the bottom of the sulfur settler, K-6, is fed to a pusher-type centrifuge. The sulfur crystals are freed of solvent and washed with water. The sulfur crystals are re-slurried in water (33 wt% solids),

preheated in heat exchanger H-14, and pumped to the melter/decanter, H-15/V-6. The pressure in V-6 is sufficient to prevent vaporization of water when the slurry is heated above the melting point of sulfur. Steam from V-6 is condensed by heat exchange (in H-14) with the cool sulfur-water slurry and recycled as wash water to the centrifuge. Two-thirds of the molten sulfur produced is sent to sulfur storage.

4.4.6 *Solvent & Sour water Stripper*

The wash stream from the centrifuge is combined with the balance of clear solvent from K-6 and sent to the solvent stripper, T-4. The combined stream contains dissolved hydrocarbons, water (3.5 wt%), unreacted H_2S and dissolved sulfur. The solvent must be stripped of most of the water to maintain the water balance in the system. Residual hydrocarbon and unreacted H_2S are effectively stripped from solution by the large water vapor flow. The feed to T-4 is preheated to 121 ^oC in H-10 by heat exchange with hot, dry (152 ^oC, 1 wt% water) solvent from the bottom of T-4. The solvent stripper contains eight theoretical trays and is equipped with a reboiler and partial condenser. The feed enters on the fourth stage. Overhead condenser H-11 operates at 35 ^oC and is fed with vapors from T-4 and the sour-water stripper, T-5, which has four trays. Approximately 65% of the condensate from reflux accumulator V-5 is fed at the top of T-5 and the rest is refluxed back to T-4 to minimize solvent vapor losses. Part of the "waste" water from T-5 is used as wash water in the centrifuge and part is used in the SO_2 absorber, T-6, to displace solvent vapors from the stack gas. Excess water is sent to disposal. Uncondensed vapors from V-5 join those from K-2 and are compressed and sent to depropanizer, T-2.

4.4.7 *Depropanizer*

Flash gas from K-4 is combined with compressed flash gas from K-5 and sour condensate from K-1. The mixed-phase stream is preheated to 61 ^oC in H-6 by

heat exchange with the bottoms from depropanizer, T-2. The feed enters on tray 9 of an 18-tray (theoretical) depropanizer equipped with a partial reboiler and condenser. The temperature in the overhead condenser is 38 ^{o}C and has a C_4^+ content of 0.6%. The bottoms temperature is 147 ^{o}C and has a C_3^- content of 0.9%. Since H_2S is more volatile than C_3 it is effectively stripped out of the bottoms product.

4.4.8 *Secondary Absorber/Reactor*

The purpose of the secondary absorber, T-3, is to scrub residual H_2S from the light hydrocarbons. The propane and lighter gases from the depropanizer are fed at the bottom of T-3, which has fourteen trays. The sour gas contacts an SO_2-rich solvent stream at 35 ^{o}C in a 5-tray (theoretical) section of T-3. Simultaneous absorption and reaction occurs in the lower section and the H_2S content is reduced to a low level (<1 ppm). Some stripping of SO_2 will occur in this section. A small amount of lean solvent is fed on tray 13. Below this tray SO_2 is reabsorbed, leaving less than 1 ppm in the exiting light gas stream. Some of the overhead gas is condensed by H-9, collected in reflux accumulator V-4 and refluxed back on tray 14 to control solvent losses. The temperature of the exiting liquid is 58 ^{o}C. The temperature rise is due to the heat of reaction between H_2S and SO_2 and to the heat of solution of reabsorbed hydrocarbons. It is desirable to maintain this column at elevated temperature to minimize reabsorption of hydrocarbons. Further processing of the light gases is not considered here. However, additional compression and fractionation in a de-ethanizer would be necessary.

4.4.9 *Furnace & SO_2 Absorber*

One-third of the sulfur produced from the centrifuge is burned in the furnace to generate the SO_2 required for the process. Air is fed from blower C-4 at a rate controlled to give the desired amount SO_2. Sulfur is fed to the furnace in excess

to assure that there is no formation of SO_3. The excess sulfur is condensed in the economizer and recycled to the furnace. The stack gas temperature is reduced to 150 ^oC in the economizer and 42.4 bar (615 psia) steam is generated.

Combustion gas from the furnace is fed to the bottom of the 13-tray (theoretical) SO_2 absorber, T-6. The acid gas is contacted with cool, lean solvent fed on tray 10. The SO_2 content of the stack gas is reduced to less than one ppm while generating an 8.2-wt% solution of SO_2. A small water wash section at the top serves to minimize solvent loss. The solvent temperature rise is 27 ^oC. This is caused by cooling the hot gas and by the heat of solution of absorbed SO_2. The solution is cooled to 35 ^oC in H-16.

4.5 PROCESS UTILITIES

The major utilities use and costs are given in Table 4-5. The total utilities cost is about 1.5 million dollars per year. Most of the cost is attributed to hydrocarbon recovery, fractionation, and compression. The substantial electric power usage of P-2 is inherent to the sulfur recovery aspect of this process configuration. The power consumption of this pump suggests a process modification that might be beneficial. This point is discussed further in section 4.7.

Except for the steam consumption in the depropanizer reboiler, the UCBSRP produces more steam than is consumed. Power consumption by refrigeration in the sour gas chiller is substantial and unavoidable. The temperature of the exiting treated gas is about 21 ^oC and not suited for additional heat integration. A valid comparsion between the integrated approach of the UCBSRP and a conventional processing scheme would require that each processing scheme produce similiar product streams.

4.6 PROCESS CONTROL

Exact overall stoichiometry between hydrogen sulfide and sulfur dioxide is

always maintained in the UCBSRP. However, at any point in the process where reaction occurs, there is an excess of either H_2S or SO_2. This excess is necessary since the reaction kinetics are first order in each component. Annihilation of stoichiometric amounts of each reactant would require a very large reactor (i.e., a long residence time). In the UCBSRP a fixed flow of SO_2 solution is fed to the secondary absorber and to the recycle reactor. The balance, and most, of the SO_2 solution is added directly to the primary reactor. The latter flow is metered on demand to maintain a set H_2S concentration in the flash gas that is fed to the depropanizer. As long as the composition and flow of the gas feed do not change dramatically this technique is insensitive to the H_2S content of the sour gas feed.

In practice, natural gas flows can fluctuate as wells are brought on or shut in and as upsets in upstream equipment occur. To follow swings in the gas flow effectively, the solvent recycle should be proportioned to the flow of gas feed. Similarily, the SO_2 solution flow to the solvent recycle reactor is proportioned to the solvent recycle flow. The flow of SO_2 solution fed to the secondary absorber is proportioned to the flow of SO_2 solution metered directly to the primary reactor. This control scheme follows fluctuations in flow and H_2S content of the sour gas feed. Continuous flow gas analyzers capable of measuring very low levels of H_2S (1-10 ppm) are very expensive and often unreliable for process control. The major control point in the UCBSRP is the H_2S content of the flash gas to the depropanizer. The H_2S content of this stream is quite high (~2900 ppm) and relatively easy to measure with most onstream H_2S analyzers.

The SO_2 absorber, T-6, is somewhat decoupled from the rest of the process. The air flow to the furnace is controlled by the level of SO_2 solution inventory in the bottom of T-6. The lean solvent flow to T-6 is proportioned to the combustion gas flow from the furnace. Excess sulfur is circulated in the furnace to minimize SO_3 formation. This scheme provides a supply of constant composition SO_2 solution in the bottom of T-6.

Conventional temperature control at the bottom of the solvent stripper is adequate to maintain a constant water content in the lean solvent.

Onstream gas analyzers for monitoring, but not controlling, the H_2S and SO_2 content of the treated gas from T-1 and the stack gas from T-6, respectively, should be included as a precaution during upset conditions.

4.7 SUMMARY

A version of the **UCBSRP** technology is applied here to sour natural gas conditioning. This integrated approach requires less equipment than does a conventional processing scheme. Most of the energy consumed by the process is associated with the recovery and fractionation of propane and heavier hydrocarbons. Approximately 92% of the electrical power usage and 89% of the cooling requirement is associated with hydrocarbon recovery and separation. The heat generated by the sulfur furnace more than offsets the heat requirements that are only associated with desulfurization of the natural gas stream. The substantial power used by the solvent-recycle pump suggests that the use of a power-recovery hydraulic turbine might be economically justified.

The thermodynamics used in the **UCBSRP** flowsheet simulator are approximate for vapor-liquid equilibria in the absence of solvent. Consequently, equilibria calculations involving straight hydrocarbons are estimated to be good to ± 10%.

List of Tables

4-1 Design Basis
4-2 Selected Physical Properities
4-3 Stream Flows and Conditions
4-4 Major Equipment List
4-5 Utilities Use and Costs.

List of Figures

4-1 Conventional Natural Gas Procesing Scheme
4-2 UCBSRP: Natural Gas Processing Scheme

Table 4-1

DESIGN BASIS

Feed

Pressure, bar	50
Temperature, ^oC	35
Rate, kmol/hr	4,986
Composition, mole %	
Methane	70.00
Ethane	9.64
Propane	8.40
Butane	4.50
Pentane and Heaviers	3.30
Carbon Dioxide	3.50
Hydrogen Sulfide	0.60
Water	0.06

Product Specifications

Treated Sales Gas	
Hydrogen Sulfide: ppm (max.)	4
Water: ppm (max.)	147
Carbon Dioxide: % (max.)	5
Hydrocarbons: Dewpoint (^oC) at 50 bar (max.)	4
Sulfur Purity: wt% (min.)	99.98
Waste Water:	< 1 ppm of H_2S or SO_2
Stack Gas: SO_2 content, ppm (max.)	100
Light Gas to Deethanizer: H_2S content, ppm (max.)	4

Table 4-2

SELECTED PHYSICAL PROPERITIES

Solvent: *Tetraglyme*

Molecular Weight	=	222.28
Boiling Point	=	275 ^oC @ 1 atm
Vapor Pressure	=	< 1.33 Pa @ 25 ^oC
Liquid Density	=	1.013 g/ml
Liquid Viscosity	=	4.1 cp
Freezing Point	=	- 29.7 ^oC

Catalyst: *3-pyrdiyl carbinol (3-Hydroxymethylpyridine)*

Molecular Weight	=	109.13
Boiling Point	=	266 ^oC @ 1 atm
Liquid Density	=	1.132 g/ml @ 20 ^oC
Solubility in water	=	miscible @ 20 ^oC
Freezing Point	=	- 8 ^oC

Table 4-3

Streams Flows and Conditions

STREAM #	N2	O2	CO2	C1	C2	C3	C4	C5+	H2S	SO2	H2O	SULD	SULP	TOTAL (W/O SOLV)	SOLV KMOLE HR	GPM SOLV ONLY	PRESS BAR	TEMP °C
	COMPONENT FLOWS (KMOLES/HR)																	
1	.0	.0	174.5	3490.2	480.7	418.8	224.4	164.5	29.88	.00	2.99	.00	.00	4986.0	.0	.0	50.0	34.9
2	.0	.0	3.8	79.3	15.1	9.0	2.0	.5	.83	.00	.00	.00	.00	110.3	.0	.0	30.0	18.1
3	.0	.0	174.5	3471.4	428.7	272.8	76.9	23.6	23.37	.00	.02	.00	.00	4471.3	.0	.0	50.0	34.9
4	.0	.0	3.8	98.5	67.2	155.0	149.5	141.4	7.34	.00	2.97	.00	.00	625.7	.0	.0	50.0	34.9
5	.0	.0	170.2	3410.1	382.2	181.3	25.9	3.0	18.27	.00	.00	.00	.00	4190.4	.0	.0	50.0	9.9
6	.0	.0	4.3	61.1	46.4	91.5	51.0	20.7	5.10	.00	.02	.00	.00	280.1	.0	.0	50.0	9.9
7	.0	.0	4.4	80.3	98.5	237.5	198.5	161.6	11.61	.00	2.99	.00	.00	795.4	.0	.0	22.0	24.9
8	.0	.0	.0	.0	.0	.0	.0	.0	.00	.00	1.62	.11	.00	1.7	13.0	12.6	1.2	19.9
9	.0	.0	8.4	.1	.8	17.0	8.6	.8	.00	.24	177.24	3.80	1.05	218.0	433.6	418.8	50.0	10.3
10	.0	.0	112.7	3361.6	350.3	123.2	10.1	1.5	.00	.00	.37	.00	.00	3960.0	.0	.0	50.0	21.3
11	.0	.0	65.8	48.4	32.8	75.0	24.4	2.2	17.79	.00	178.92	5.69	.00	449.9	446.5	431.2	50.0	16.5
12	.0	.0	74.0	49.1	35.7	122.9	25.7	2.2	1.51	.00	218.72	12.20	37.31	578.2	536.0	517.6	50.0	28.4
13	.0	.0	68.4	15.2	25.7	114.8	25.1	2.1	1.49	.00	218.67	12.20	37.31	519.8	536.1	517.7	22.0	25.9
14	.0	.0	5.6	33.9	10.0	8.2	.7	.1	.02	.00	.04	.00	.00	58.5	.0	.0	22.0	25.9
15	.0	.0	.0	.0	.0	.0	.0	.0	.00	7.31	3.14	.20	.00	10.7	23.3	22.5	22.0	34.9
16	.0	.0	.0	.0	.0	.0	.0	.0	.00	.60	.26	.02	.00	.9	1.9	1.8	22.0	34.9
17	.0	.0	.0	.0	.0	3.4	211.2	163.0	.00	.00	3.25	.00	.00	380.9	.0	.0	22.0	147.2
18	.0	.0	60.0	15.1	24.9	97.8	16.4	1.3	.78	.00	.22	.00	.00	216.5	.0	.0	6.5	19.9
19	.0	.0	.0	.0	.1	1.9	1.2	.4	.01	.00	1.63	.00	.00	5.3	.0	.0	6.5	19.9
20	.0	.0	58.0	15.1	24.8	95.6	15.6	1.5	.62	.00	1.42	.00	.00	212.6	.0	.0	1.2	9.9
21	.0	.0	68.4	15.2	25.8	116.6	26.3	2.5	1.50	.00	220.25	12.19	37.29	524.9	536.0	517.6	1.2	15.6
22	.0	.0	8.4	.1	.8	17.0	8.6	.8	.71	.00	176.26	3.77	.00	216.4	431.6	416.8	1.2	9.9
23	.0	.0	70.0	129.2	133.4	343.5	215.6	163.1	12.44	.00	3.25	.00	.00	1070.6	.0	.0	22.0	60.9
24	.0	.0	8.2	.6	2.9	47.9	1.3	.0	.36	.99	19.99	18.69	.00	101.0	66.1	63.9	22.0	57.6
25	.0	.0	1.9	.0	.2	3.9	2.0	.2	.16	.00	40.17	.86	.00	49.3	98.4	95.0	1.2	9.9
26	.0	.0	.1	.0	.0	.2	.1	.0	.01	.00	2.45	.05	44.82	46.8	6.0	5.8	1.2	9.9
27	.0	.0	.1	.0	.0	.2	.1	.0	.01	.00	7.46	.05	.00	8.0	6.0	5.8	1.2	11.0
28	.0	.0	70.0	129.3	133.4	340.1	4.3	.0	12.44	.00	.00	.00	.00	689.4	.0	.0	22.0	39.4
29	.0	.0	61.8	128.6	130.4	292.1	3.0	.0	.00	.00	.56	.00	.00	616.3	.0	.0	22.0	34.9
30	.0	.0	.0	.0	.0	.0	.0	.0	.00	.00	5.45	.38	.00	5.8	43.7	42.2	1.2	19.9
31	.0	.0	.0	.0	.0	.0	.0	.0	.00	7.03	3.02	.20	.00	10.2	22.4	21.6	22.0	34.9
32	.0	.0	2.0	.0	.2	4.1	2.1	.2	.17	.00	47.61	.91	.00	57.3	104.4	100.8	1.2	120.9
33	.0	.0	.0	.0	.0	.0	.0	.0	.00	.00	13.01	.91	.00	13.9	104.4	100.8	1.2	152.2
34	.0	.0	.0	.0	.0	.0	.0	.0	.00	.00	5.00	.00	.00	5.0	.0	.0	1.0	34.9
35	.0	.0	2.0	.0	.2	4.1	2.1	.2	.17	.00	.43	.00	.00	9.2	.0	.0	1.2	34.9
36	.0	.0	.0	.0	.0	.0	.0	.0	.00	.00	157.94	.00	44.82	201.7	.0	.0	2.0	101.2
37	.0	.0	.0	.0	.0	.0	.0	.0	.00	.00	.00	.00	43.80	43.8	.0	.0	2.0	119.9
38	56.2	.0	.0	.0	.0	.0	.0	.0	.00	.00	.79	.00	.00	57.0	.0	.0	1.0	12.0
39	.0	.0	.0	.0	.0	.0	.0	.0	.00	.00	1.26	.00	.00	1.3	.0	.0	1.0	34.9
40	.0	.0	.0	.0	.0	.0	.0	.0	.00	.00	5.94	.42	.00	6.4	47.6	46.0	1.2	19.9
41	.0	.0	.0	.0	.0	.0	.0	.0	.00	14.94	6.41	.42	.00	21.8	47.6	46.0	1.0	61.9
42	.0	.0	.0	.0	.0	.0	.0	.0	.00	.00	34.18	.00	.00	34.2	.0	.0	1.2	104.9
43	.0	.0	.0	.0	.0	.0	.0	.0	.00	.00	.00	.00	14.94	14.9	.0	.0	.0	119.9
44	56.2	14.9	.0	.0	.0	.0	.0	.0	.00	.00	.00	.00	.00	71.1	.0	.0	1.0	24.9
45	56.2	.0	.0	.0	.0	.0	.0	.0	.00	14.94	.00	.00	.00	71.1	.0	.0	1.0	149.9

Table 4-4

MAJOR EQUIPMENT LIST

		Power (kW_e)
C-1	Compressor, Hydrocarbon Flash Gas	40
C-2	Compressor, Flash Gas (Stage #1)	272
C-3	Compressor, Flash Gas (Stage #2)	209
C-4	Air Blower	3
		Heat Load (kW_t)
H-1	Chiller, Sour Gas Feed	3327
H-2	Cold Recovery Exchanger	468
H-3	Chiller, Lean Solvent	15
H-4	Chiller, Rich Solvent	414
H-5	Intercooler, C-2	74
H-6	Exchanger, Depropanizer Feed Preheat	UA (kW_t/K) = 55
H-7	Condenser, Depropanizer	3301
H-8	Reboiler, Depropanizer	5823
H-9	Condenser, Secondary Absorber	347
H-10	Exchanger, Solvent Stripper Feed Preheat	UA (kW_t/K) = 80
H-11	Condenser, Solvent & Sour Water Stripper	658
H-12	Reboiler, Solvent Stripper	816
H-13	Reboiler, Sour Water Stripper	29
H-14	Exchanger, Sulfur Slurry Preheat	14
H-15	Melter, Sulfur Slurry	23
H-16	Cooler, SO_2 Solution	150
H-17	Furnace and Waste Heat Boiler	1142
K-1	Flash, Hydrocarbon Liquids	
K-2	Knockout, Hydrocarbon liquids (Ambient)	
K-3	Knockout, Hydrocarbon liquids (Chilled)	
K-4	Flash, Rich Solvent	
K-5	Knockout, C-2 Interstage	
K-6	Flash, Crystallizer, Settler	
		Volume (m^3)
V-1	Reactor, Primary	1.0
V-2	Reactor, Solvent Recycle	2.0
V-3	Reflux Drum*, Depropanizer	3.5
V-4	Reflux Drum*, Secondary Absorber	< 0.5
V-5	Reflux Drum*, Solvent & Sour-water Stripper	< 0.5
V-6	Decanter*	0.7
*	Hold-up Time = 5 min.	
PC	Centrifuge, Pusher-Type	
		Power (kW_e)
P-1	Pump, Lean Solvent to Primary Absorber	4

P-2	Pump, Solvent Recycle to Primary Absorber	194
P-3	Pump, Depropanizer Reflux	*
P-4	Pump, Depropanizer Bottoms	*
P-5	Pump, Sulfur/Solvent Slurry to Centrifuge	*
P-6	Pump, Flashed Solvent Transfer	*
P-7	Pump, Supernate to Solvent Stripper	*
P-8	Pump, Sulfur/Water Slurry to Melter/Decanter	1
P-9	Pump, Lean Solvent Transfer	*
P-10	Pump, Secondary Absorber Bottoms to Primary Reactor	34
P-11	Pump, Lean Solvent to Secondary Absorber	6
P-12	Pump, Secondary Absorber Reflux	*
P-13	Pump, Solvent & Sour-Water Stripper Reflux	*
P-14	Pump, Water Transfer	*
P-15	Pump, SO_2/Solvent Solution Transfer	9
*	See Table 4-5	

		No. of Theoretical Trays
T-1	Absorber, Primary H_2S	10
T-2	Depropanizer	18
T-3	Absorber, Secondary H_2S	14
T-4	Stripper, Solvent	8
T-5	Stripper, Sour-Water	4
T-6	Absorber, SO_2	13

Table 4-5

UTILITIES USE AND COSTS

Electric Power		
Hydrocarbon Flash Gas Compressor, C-1	40	kW
Flash Gas Compressor (Stage #1), C-2	272	
Flash Gas Compressor (Stage #2), C-3	209	
Air Blower (20 in. W.C.), C-4	3	
Solvent Recycle Pump, P-2	194	
Solvent Forwarding Pumps; P-1, P-5, P-6, P-9 P-10, P-11, P-15	70	
Small Pumps; P-3, P-4, P-7, P-8 P-12, P-12, P-13, P-14	10	
Total	795	kW
Annual* Cost @ $0.07/kW-hr	$445,200	
Steam Produced, 42.2 bar (615 psia)		
Waste heat boiler	< 2,430 >	kg/hr
Annual* Credit @ $11.50/10^3 kg	< $223,560 >	
Steam Consumed, 11.5 bar (165 psia)		
Depropanizer Reboiler, H-8	10,543	kg/hr
Solvent Stripper Reboiler, H-12	1,350	
Sour Water Stripper Reboiler, H-13	52	
Sulfur Melter, H-15	42	
Total steam consumed	11,987	kg/hr
Annual* Cost @ $9.90/10^3 kg	$949,370	
Cooling Water **		
SO_2 Solution Cooler; H-16	28	gal/min
Depropanizer Condenser, H-7	737	
Secondary Absorber Condenser, H-9	66	
Solvent Stripper Condenser, H-11	125	
Total cooling water usage	956	gal/min
Annual* Cost @ $0.10/10^3 gal	$45,888	
Refrigeration Produced ***		
Heat Recovery Exchanger, H-2	< 133 >	tons
Annual* Credit @ $0.04/ton-hr	< $42,560 >	
Refrigeration Consumed ****		
Sour Gas Chiller, H-1	945	tons

Lean Solvent Chiller, H-3	4	
Rich Solvent Chiller, H-4	118	
Interstage Cooler, H-5	21	
Total refrigeration usage	1088	tons
Annual* Cost @ $0.04/ton-hr	**348,160**	
Total Net Annual* Cost for Utilities	**$1,552,500**	

* Annual costs based on an operating rate of 8,000 hrs/yr.
** Cooling Water available at 30 °C. Maximum Exit Temp. = 50 °C.
*** Cooling available from 0 °C to 20 °C.
**** Propane refrigeration: 0°C evaporator and 95 °C condenser.

FIGURE 4–1

Conventional Natural Gas Processing Scheme

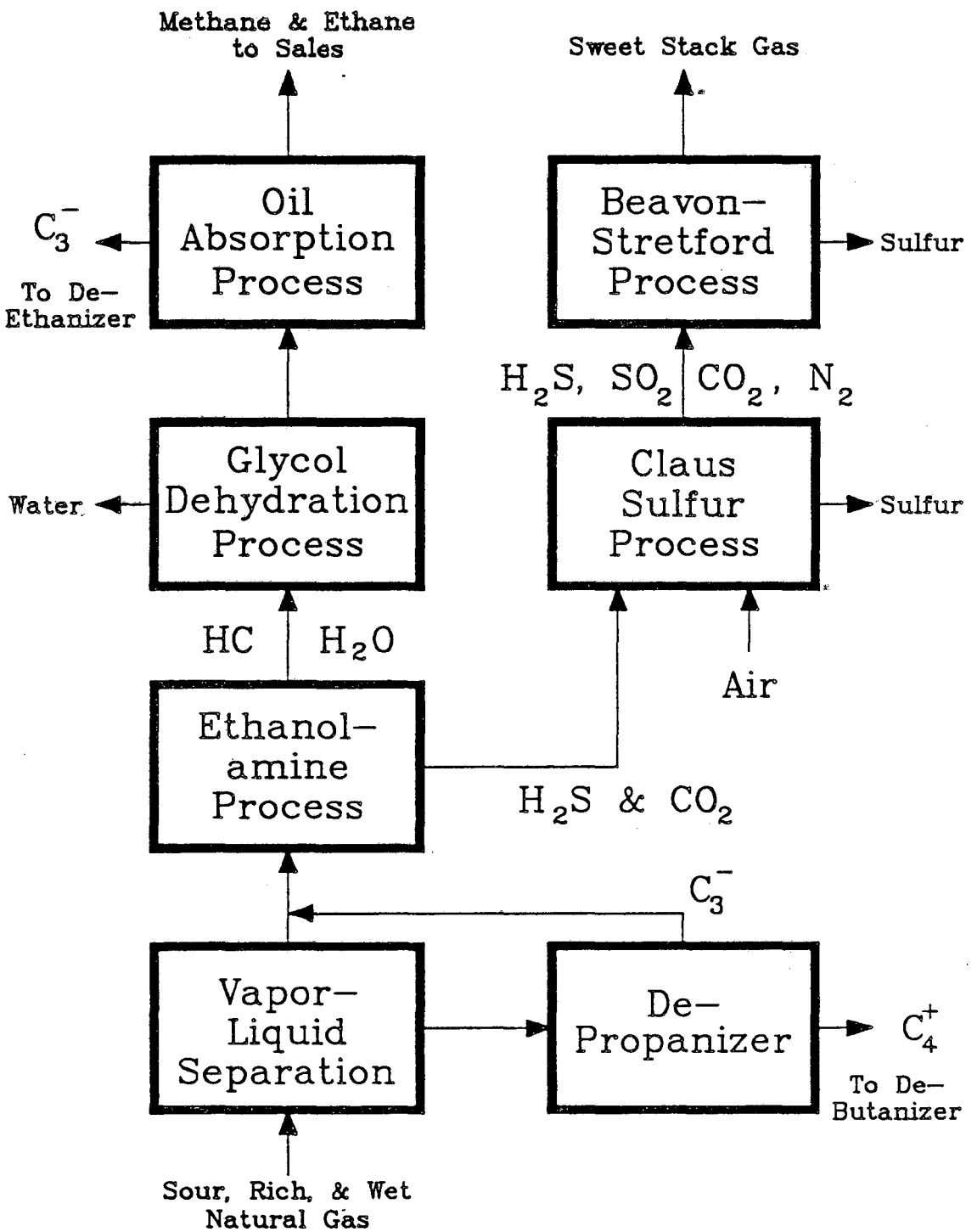

Figure 4-2

UCBSRP: Natural Gas Processing Scheme

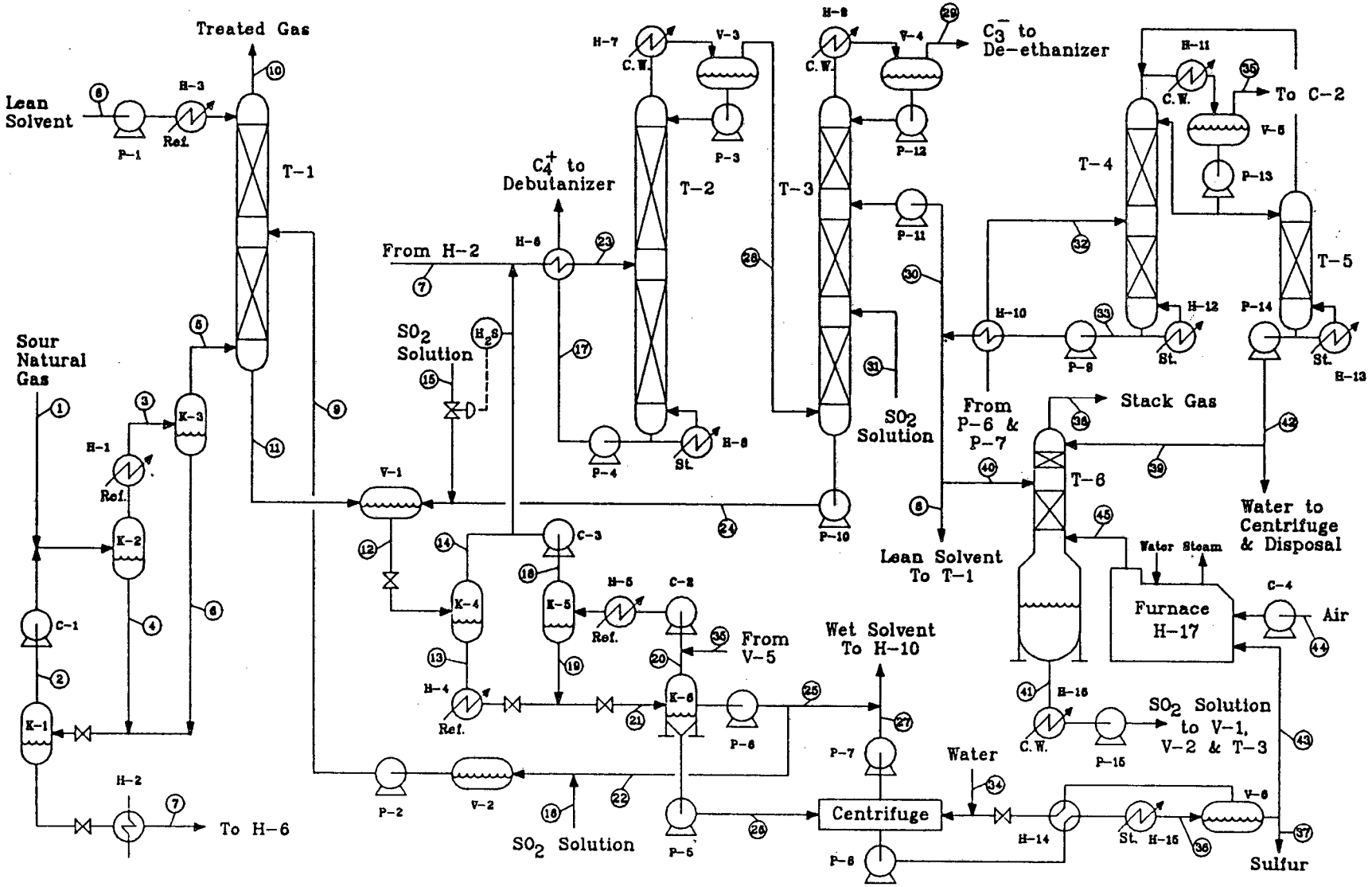

REFERENCES

CHAPTER 1

Neumann, D. W. Ph.D. Thesis, Department of Chemical Engineering, University of California, Berkeley, CA, 1986.

Renault, P. US Patent 3 441 379, 1969.

Savage, D. W.; Funk, E. W.; Yu, W. C.; Astarita, G. *Ind. Eng. Chem. Fundam.*, 1986, *25*, 326-330.

Townsend, F. M. US Patent 3 170 766, 1965.

CHAPTER 2

Hammick, D. L.; Holt, W. E. *J. Chem. Soc.* 1926, 1995.

Kirk, R. E.; Othmer, D. F. "Encyclopedia of Chemical Technology"; The Interscience Publishers: New York, NY, 1954, Volume 13.

Prausnitz, J. M. "Molecular Thermodynamics of Fluid-Phase Equilibria"; Prentice-Hall: Englewood Cliffs, NJ, 1969, Chapter 9.

Scott, R. L. "Elemental Sulfur", Edited by B. Meyer; John Wiley & Sons: New York, NY, 1965, Chapter 17.

CHAPTER 3

Albright, L. F.; Shannon, P. T.; Yu, S.; Chuch, P. L. *Chem. Eng. Prog. Symp. Ser.*, 1964, *59*, No. 44, 66-74.

Demyanovich, R. J. Ph.D. Thesis, Department of Chemical Engineering, University of California, Berkeley, CA, 1984.

Dymond, J. H.; Smith, E. B. "The Virial Coefficients of Pure Gases and Mixtures"; Oxford University Press: New York, NY, 1980.

Hartel, G. H. *J. Chem. Eng. Data*, 1985, *30*, 57-61.

Hayduk, W.; Walter, E. B.; Simpson, P. *J. Chem. Eng. Data*, 1972, *17*, 59-61.

Kohl, A.; Riesenfeld, F. "Gas Purification"; Gulf Publishing Co.: Houston, TX, 1979.

Prausnitz, J. M. "Molecular Thermodynamics of Fluid-Phase Equilibria"; Prentice-Hall: Englewood, NJ, 1969, Chapter 8.

Wilhelm, E.; Battino, R.; Wilcock, R. J. *Chemical Reviews*, 1977, *77*, 219-262.

CHAPTER 4

Lynn, S.; Neumann D. W.; Sciamanna, S. F.; Vorhis, F. H. "A Comparsion of the UCB Sulfur Recovery Process with Conventional Sulfur Recovery Technology for Treating Recycle Gas from a Crude Oil Residuum Hydrotreater", LBL-21574; Lawrence Berkeley Laboratory: Berkeley, CA, 1986.

Neumann, D. W. Ph.D. Thesis, Department of Chemical Engineering, University of California, Berkeley, CA, 1986.

APPENDIX A

A.1 Determination of Sulfur Solubility Near or Below Room Temperature

A.2 Ternary Coordinate Transformation

A.3 Experimental Data: Sulfur Solubility in Pure and Mixed Solvents

A.4 Experimental Data: Model Ternary System

Appendix A.1

Determination of Sulfur Solubility Near or Below Room Temperature

The experimental method described in Section 2.4.1 is only applicable to solubility measurements above room temperature. Unless a thermostatically controlled refrigerated bath is used, it is difficult to control the heating rate of the sample. A method was devised to estimate sulfur solubility below room temperature by utilizing the data measured above room temperature. In this method, a known amount of sulfur is added to a sample of solvent that is known to be saturated at a given sub-ambient temperature. The mixture is then heated until the sulfur just dissolves. This apparent solubility is compared to the known solubility of sulfur in that solvent at that temperature to determine the amount of sulfur that was present at the lower temperature. The method is described below.

Make a saturated solution of sulfur in solvent at some elevated temperature. Cool the sulfur-solvent mixture to the desired temperature. Sulfur will precipitate, leaving a supernatant liquid saturated with sulfur at that temperature. Add some of the supernate to a test tube of known mass. Determine the amount of the supernate by difference. Add recrystallized sulfur to the test tube. Determine the exact mass of sulfur added by difference. The amount of sulfur added should correspond to the lowest sulfur solubility reliably measured above room temperature. Perform the sulfur solubility experiment as described in Section 2.4.1. Determine the solubility at the measured dissolution temperature from the above room temperature data. The solubility at the original reduced temperature is related to the solubility at the elevated temperature, the mass of sulfur added and the mass of saturated solvent by $W_S^r = W_S^e - B(100-W_S^e)$. In this expression, W_S^r is the sulfur solubility at the reduced temperature, W_S^e is the sulfur solubility at the elevated temperature and "B" is the mass ratio of sulfur added to saturated solvent. Sulfur solubility is given as weight percent sulfur in the solvent-sulfur mixture.

Appendix A.2

Ternary Coordinate Transformation

The sulfur solubility data shown in Figure 2-8 were used to describe the ternary phase envelope for the DMA, Dowanol DM and sulfur system. Data at 120 ^{o}C were interpolated from Figure 2-8 and used to construct Figure A-1. Figure A-1 relates the weight percent of sulfur dissolved in sulfur-free solvent. The solvent composition in the ternary mixture is related to the sulfur-free solvent composition by

$$W_{Dow} = W'_{Dow}\,(100 - W_S)/100 \tag{1}$$

$$W_{DMA} = W'_{DMA}\,(100 - W_S)/100 \tag{2}$$

where (') denotes sulfur-free and composition is given in weight percent. The composition of the sulfur-rich phase can be estimated using Figure A-1, the solvent-rich phase analysis, and the known feed composition. This estimate can also be made with the conventional ternary diagram; however, the logarithmic nature of Figure A-1 is easier to interpolate. Consider the typical ternary diagram shown in Figure A-2. The mathematical relationship for a "tie-line" in the rectangular coordinate system to one in an equilateral triangle ternary diagram is described by

$$Y = W_A \tag{3}$$

$$X = 100 - W_B - W_A/2 \tag{4}$$

$$Y = mX + b \tag{5}$$

The slope "m" and intercept "b" are determined from the known feed and solvent phase analysis. Let component A refer to DMA, B refer to Dowanol DM and C refer to sulfur. The DMA content, expressed on a sulfur-free basis, is related to the sulfur content along the "tie-line" by

$$W_C = [W'_A(1-m/2) - b]/[W'_A(1-m/2)/100 + m] \tag{6}$$

The intersection of this function and the curve in Figure A-1 are the ends of an equilibrium tie-line. The ternary data given in Appendix A.4 were used to estimate the analysis of the sulfur-rich phase.

FIGURE A–1

Phase Envelope for Dowanol DM, N,N–Dimethylaniline, and Sulfur at 120 °C

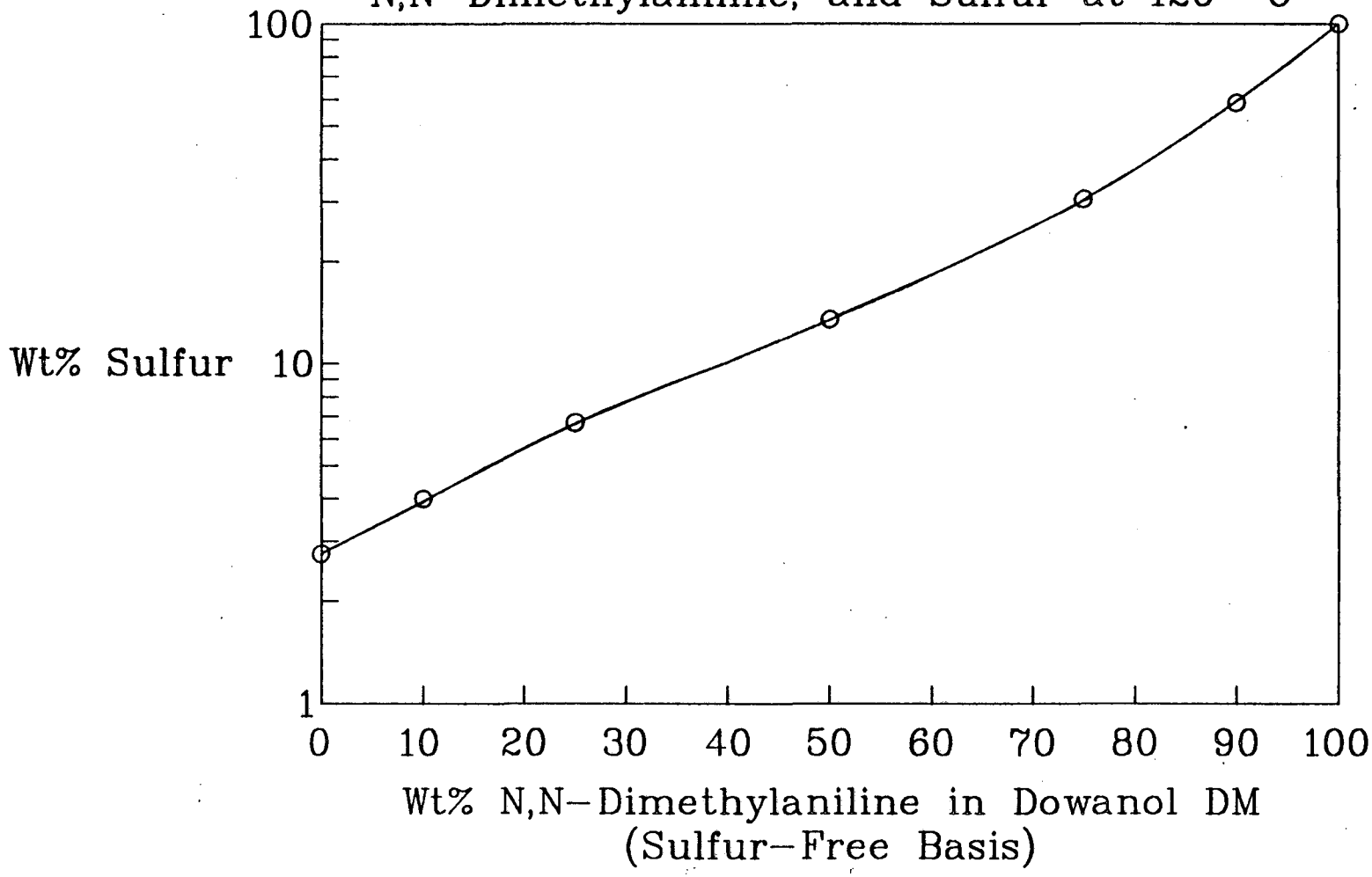

FIGURE A–2

Relationship Between Ternary and Rectangular Coordinate Systems

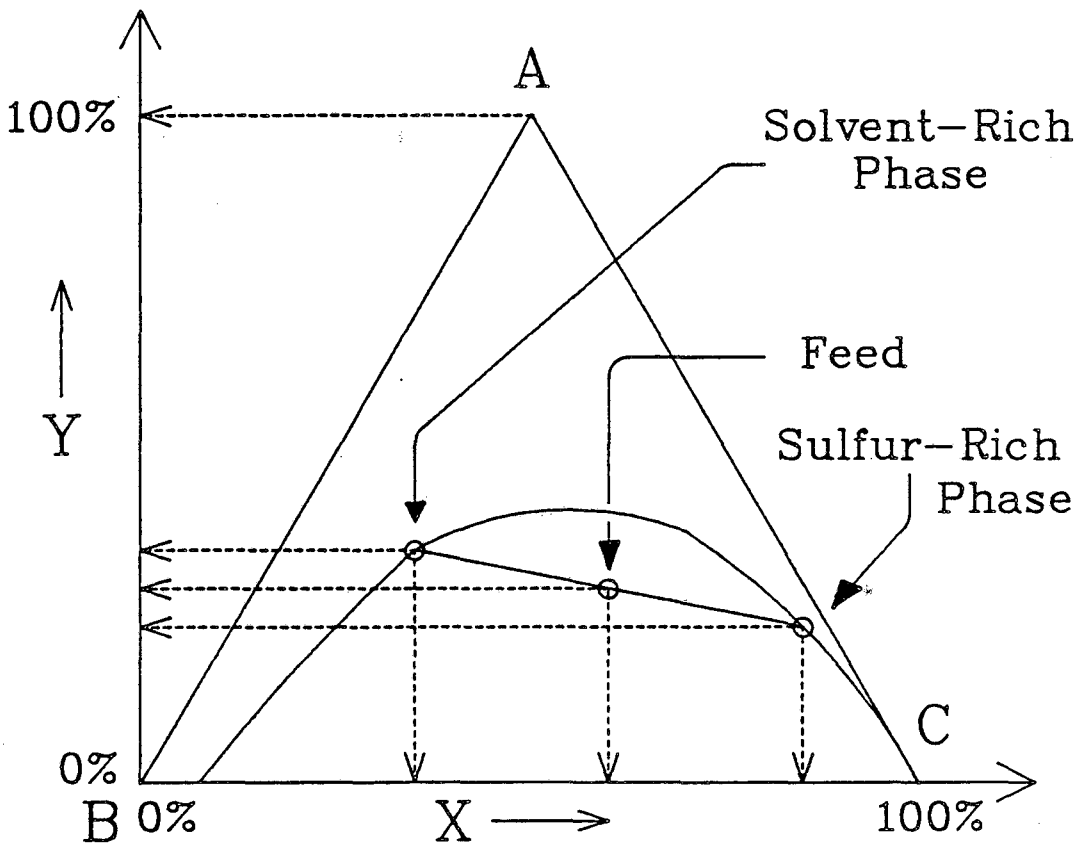

$Y = W_A$

$X = 100 - W_B - W_A/2$

where W_i = Wt.% of component "i"

A ≡ N,N Dimethylaniline
B ≡ Dowanol DM
C ≡ Sulfur

****

Appendix A.3
EXPERIMENTAL DATA: SULFUR SOLUBILITY IN PURE AND MIXED SOLVENTS

****

Melting point of Rhombic Sulfur: T_m

$T_m = 112.8\ ^oC = 385.85\ K$

Sulfur Dissolution Temperature: T_d

A. <u>Model Catalyst Compounds</u>

1. N,N Dimethylaniline
2. Quinoline

B. <u>Diethers</u>

1. Diglyme: Diethylene glycol dimethyl ether
2. Triglyme: Triethylene glycol dimethyl ether
3. Tetraglyme: Tetraethylene glycol dimethyl ether

C. <u>Monoethers</u>

1. Dowanol DM: Diethylene glycol methyl ether
2. Dowanol TBH: Triethylene glycol butyl ether
3. Dowanol DPM: Dipropylene glycol methyl ether
4. Dowanol TPM: Tri propylene glycol methyl ether

D. <u>Glycols</u>

1. Diethylene Glycol

E. <u>Effect of Water</u>

1. 2.5 wt% Water in Dowanol DM
2. 5.0 wt% Water in Dowanol DM
3. 5.0 wt% Water in Diglyme

F. <u>Mixed Organic Solvents</u>

1. 10.00 wt% DMA in Dowanol DM
2. 25.00 wt% DMA in Dowanol DM
3. 50.13 wt% DMA in Dowanol DM
4. 75.00 wt% DMA in Dowanol DM
5. 90.00 wt% DMA in Dowanol DM

A. Model Catalyst Compounds

N,N Dimethylaniline (DMA)

Wt% Sulfur	T_d (°C)	$T_m(K)/T_d(K)$	Mole% S_8	Gamma (S_8)
4.46	35.3	1.251	2.16	17.1
6.18	45.5	1.211	3.02	14.3
10.15	60.8	1.156	5.07	10.6
15.74	74.8	1.109	8.11	8.0
20.95	83.0	1.084	11.13	6.4
28.44	90.5	1.061	15.81	5.0
38.16	96.0	1.046	22.57	3.7
51.56	99.5	1.036	33.46	2.6
70.42	101.8	1.029	52.94	1.7
90.73	104.3	1.023	82.22	1.1
95.71	107.5	1.014	91.34	1.0

Quinoline

Wt% Sulfur	T_d (°C)	$T_m(K)/T_d(K)$	Mole% S_8	Gamma (S_8)
2.32	23.5	1.301	1.18	25.5
2.76	29.8	1.274	1.41	23.8
3.03	34.0	1.257	1.55	23.2
3.55	39.0	1.236	1.82	21.5
4.30	44.0	1.217	2.21	19.1
4.81	47.5	1.204	2.48	17.0
5.71	52.0	1.187	2.96	16.1
5.81	52.0	1.187	3.01	15.8
6.38	55.3	1.175	3.32	15.0
7.64	61.0	1.155	4.00	13.5
8.55	63.0	1.148	4.50	12.3
9.73	67.2	1.134	5.15	11.4
10.36	69.4	1.126	5.50	11.0
11.16	70.7	1.122	5.95	10.3
12.64	75.8	1.106	6.79	9.7
14.14	78.2	1.098	7.66	8.8
16.22	81.5	1.088	8.89	7.9
18.08	83.0	1.084	10.00	7.2
25.27	91.2	1.059	14.56	5.4
39.36	99.8	1.035	24.64	3.5
57.05	101.5	1.030	40.09	2.2
65.88	103.5	1.025	49.31	1.8
74.77	104.5	1.022	59.89	1.5
81.53	105.5	1.019	68.98	1.3
94.63	109.0	1.010	89.88	1.1
100.00	112.8	1.000	100.00	1.0

B. Diethers

Diglyme

Wt% Sulfur	T_d (°C)	$T_m(K)/T_d(K)$
1.00	61.2	1.154
2.00	81.5	1.088
3.00	95.8	1.046
4.00	105.5	1.019
5.00	112.5	1.000
6.00	125.0	0.969
7.00	141.5	0.931
8.00	152.0	0.908

Triglyme

Wt% Sulfur	T_d (°C)	$T_m(K)/T_d(K)$
1.00	63.5	1.146
2.00	81.5	1.088
3.00	94.5	1.050
4.00	104.5	1.022
5.00	113.0	0.999
6.00	125.3	0.969
7.00	138.0	0.939
8.00	152.5	0.907

Tetraglyme

Wt% Sulfur	T_d (°C)	$T_m(K)/T_d(K)$
0.50	50.5	1.193
1.00	66.0	1.138
1.50	75.5	1.107
2.00	82.5	1.085
2.50	88.5	1.067
3.00	95.0	1.048
3.50	103.0	1.026
4.00	109.3	1.009
4.30	113.0	0.999
4.50	116.0	0.992
5.00	119.5	0.983
6.00	134.5	0.947
7.00	147.0	0.919
8.00	158.5	0.894

C. Monoethers

Dowanol DM

Wt% Sulfur	T_d (°C)	$T_m(K)/T_d(K)$
0.43	63.5	1.146
0.45	67.2	1.134
0.51	67.0	1.135
0.75	75.0	1.109
0.82	79.6	1.094
0.82	80.0	1.093
1.00	84.5	1.079
1.05	87.4	1.074
1.09	84.0	1.081
1.09	90.0	1.063
1.09	90.0	1.063
1.10	88.5	1.067
1.27	94.5	1.050
1.27	93.2	1.054
1.39	95.0	1.048
1.45	97.5	1.041
1.66	100.0	1.034
1.73	100.5	1.033
1.97	105.5	1.019
2.09	107.8	1.013
2.27	110.8	1.005
2.36	111.0	1.005
2.54	115.8	0.992
2.55	117.5	0.988
2.73	118.5	0.985
2.91	123.0	0.974
2.96	118.5	0.985
2.96	123.0	0.974
3.18	127.0	0.965
3.27	129.0	0.960
3.36	131.0	0.955
3.50	132.8	0.951
3.55	135.0	0.946
3.67	139.5	0.935
3.73	138.5	0.938
3.89	136.5	0.942
4.00	140.0	0.934
4.18	144.8	0.923
4.22	140.0	0.934
4.36	147.5	0.918
4.50	146.5	0.920
4.50	148.8	0.915
4.50	150.0	0.912
4.50	145.0	0.923
4.55	150.0	0.912

Dowanol TBH

Wt% Sulfur	T_d (°C)	$T_m(K)/T_d(K)$
0.64	58.0	1.165
1.00	69.5	1.126
1.54	80.8	1.090
2.00	88.0	1.069
2.45	97.0	1.043
3.00	103.5	1.025
3.59	109.0	1.010
4.00	118.0	0.987
5.00	128.0	0.962
6.00	138.0	0.939
7.18	160.0	0.891

Dowanol DPM

Wt% Sulfur	T_d (°C)	$T_m(K)/T_d(K)$
1.00	77.5	1.101
2.00	95.5	1.047
3.00	111.0	1.005
4.00	132.5	0.951

Dowanol TPM

Wt% Sulfur	T_d (°C)	$T_m(K)/T_d(K)$
2.00	105.8	1.018
2.50	109.5	1.009
3.00	114.0	0.997
3.50	120.5	0.980
4.00	128.8	0.960

D. Glycols

Diethylene Glycol

Wt% Sulfur	T_d (°C)	$T_m(K)/T_d(K)$
0.25	85.5	1.076
0.30	93.5	1.053
0.40	103.0	1.026
0.50	109.5	1.009
0.75	128.5	0.961
1.00	139.0	0.936
1.50	163.5	0.884

E. Effect of Water

2.5 Wt% Water in Dowanol DM

Wt% Sulfur	T_d (°C)	$T_m(K)/T_d(K)$
0.40	68.3	1.130
0.50	75.0	1.109
0.70	82.2	1.086
1.10	94.3	1.050
1.60	105.0	1.021
2.00	109.8	1.008
2.30	117.0	0.989
2.50	121.5	0.978

5.0 Wt% Water in Dowanol DM

Wt% Sulfur	T_d (°C)	$T_m(K)/T_d(K)$
0.40	73.0	1.115
0.50	80.8	1.090
0.60	85.2	1.077
0.70	88.8	1.066
0.80	93.8	1.052
1.00	97.0	1.043
1.20	104.1	1.023
1.40	107.2	1.015
1.60	111.5	1.003
1.70	114.8	0.995
1.80	116.8	0.990
2.00	121.3	0.978

5.0 Wt% Water in Diglyme

Wt% Sulfur	T_d (°C)	$T_m(K)/T_d(K)$
0.50	58.3	1.164
0.60	60.5	1.157
0.70	66.5	1.136
0.90	72.8	1.116
1.00	77.7	1.100
1.50	86.3	1.074

F. Mixed Organic Solvents

10.00 wt% DMA in Dowanol DM

Wt% Sulfur	T_d (°C)	$T_m(K)/T_d(K)$
0.64	59.0	1.162
0.86	67.5	1.133
1.06	74.5	1.110
1.27	79.0	1.096
1.48	84.5	1.079
1.69	88.5	1.067
1.90	91.5	1.058
2.09	94.5	1.050
2.64	102.5	1.027
3.18	108.5	1.011
3.64	113.5	0.998
4.18	121.5	0.978
4.64	129.6	0.959
5.18	136.0	0.943
5.73	143.5	0.926
6.16	147.2	0.918

25.00 wt% DMA in Dowanol DM

Wt% Sulfur	T_d (°C)	$T_m(K)/T_d(K)$
0.85	55.4	1.175
0.85	51.5	1.189
0.95	54.5	1.178
1.05	59.4	1.161
1.16	61.0	1.155
1.27	63.7	1.146
1.40	66.5	1.136
1.45	69.0	1.128
1.58	69.5	1.126
1.69	75.0	1.109
1.73	72.5	1.117
1.79	73.5	1.113
1.91	76.9	1.103
2.11	78.3	1.098
2.27	81.0	1.090
2.55	84.5	1.079
2.64	87.0	1.072
2.81	88.0	1.069
3.18	92.5	1.056
3.64	95.0	1.048
4.18	102.5	1.027
4.18	99.6	1.035
4.64	104.2	1.023
4.64	103.5	1.025
5.18	105.0	1.021

5.18	107.2	1.015
5.69	108.5	1.011
6.18	115.0	0.994
6.59	120.0	0.982
7.18	127.0	0.965
7.64	132.0	0.953
8.15	135.5	0.944
8.36	139.0	0.936
9.11	145.5	0.922

50.13 wt% DMA in Dowanol DM

Wt% Sulfur	T_d (°C)	$T_m(K)/T_d(K)$
1.09	30.0	1.273
1.27	41.0	1.229
1.27	36.5	1.246
1.45	41.5	1.227
1.82	48.0	1.202
1.96	55.0	1.176
2.09	53.5	1,182
2.64	62.5	1.150
2.96	66.0	1.138
3.09	68.0	1.131
4.18	75.7	1.106
4.27	78.5	1.098
5.18	82.5	1.085
6.18	87.6	1.070
6.20	87.0	1.072
7.18	92.0	1.057
7.55	93.4	1.053
8.18	96.6	1.044
8.73	99.0	1.037
9.09	100.5	1.033
10.09	103.5	1.025
10.26	101.0	1.032
11.00	107.0	1.015
11.09	106.0	1.018
11.91	111.0	1.005
12.49	114.5	0.996
12.86	116.0	0.992
13.27	121.0	0.979
13.82	126.0	0.967
14.18	126.5	0.966
15.64	132.0	0.953
17.36	141.0	0.932

75.00 wt% DMA in Dowanol DM

Wt% Sulfur	T_d (°C)	$T_m(K)/T_d(K)$
2.09	28.5	1.279
3.09	41.5	1.227

4.18	50.8	1.191
6.18	65.0	1.141
8.09	73.8	1.112
11.91	85.0	1.078
15.55	92.6	1.055
19.09	98.2	1.039
23.27	103.2	1.026
25.64	106.0	1.018
27.27	111.2	1.004
31.00	122.2	0.976
34.64	131.0	0.955
38.09	139.0	0.936
41.45	145.8	0.921

90 wt% DMA in Dowanol DM

Wt% Sulfur	T_d (^oC)	$T_m(K)/T_d(K)$
47.55	110.2	1.007
58.55	119.5	0.983
67.91	125.8	0.967
76.08	131.1	0.955
83.15	133.0	0.950

Appendix A.4

TERNARY SYSTEM DATA AT 120 °C

Sulfur
Diethylene glycol methyl ether : Dow DM
N,N Dimethylaniline : DMA

Solvent Phase Analysis

		DMA	Dow DM	Sulfur
(1)	Feed	30.00	10.00	60.00
	Solvent	53.34	20.61	26.05
(2)	Feed	30.00	30.00	40.00
	Solvent	42.27	45.26	12.47
(3)	Feed	10.00	30.00	60.00
	Solvent	20.28	75.05	4.68
(4)	Feed	35.00	5.00	60.00
	Solvent	45.12	6.85	48.03

Sulfur Phase Analysis

(Estimated: Refer to Appendix A.2)

	DMA	Dow DM	Sulfur
(1)	8.30	0.10	91.60
(2)	5.94	0.06	94.00
(3)	3.18	0.02	96.80
(4)	8.62	0.18	91.20

APPENDIX B

B.1 Derivation of Temperature Dependence of Henry's Law

B.2 Vapor-Space Hold-Up Estimate

B.3 Equipment Specifications

B.4 Control Program Input Data (Sample)

B.5 Experiment Control Program

B.6 Control Program Run-Time Output (Sample)

B.7 Output Data File (Sample)

B.8 Data Regression and Correlation Program (CRUNCH.F77)

Appendix B.1

Derivation of the Temperature Dependence of Henry's Law

The vapor-liquid equilibrium expression for solute (2) dissolved in solvent (1) is described by

$$\bar{f}_2^v = \bar{f}_2^\ell \tag{B.1-1}$$

where (¯) denotes a partial molar property. The total derivative of the natural logarithm of Equation (B.1-1) is also a valid phase equilibrium expression and shown below.

$$d(\ell n\ \bar{f}_2^v) = d(\ell n\ \bar{f}_2^\ell) \tag{B.1-2}$$

In Equation (B.1-2), the fugacity, f, in either phase is a function of temperature, presssure and composition. The total derivative of the fugacity with respect to temperature, pressure and composition in either the vapor or the liquid phase is

$$d(\ell n\ \bar{f}_2) = \left[\frac{\partial(\ell n\ \bar{f}_2)}{\partial T}\right]_{P,x} dT + \left[\frac{\partial(\ell n\ \bar{f}_2)}{\partial P}\right]_{T,x} dP + \left[\frac{\partial(\ell n\ \bar{f}_2)}{\partial x_2}\right]_{T,P} dx_2 \tag{B.1-3}$$

The partial derivatives of the solute fugacity with respect to temperature and to pressure are

$$\left[\frac{\partial(\ell n\ \bar{f}_2)}{\partial T}\right]_{P,x} = -\left[\frac{\bar{H}_2 - \bar{H}_2^o}{RT^2}\right] \tag{B.1-4}$$

$$\left[\frac{\partial(\ell n\ \bar{f}_2)}{\partial P}\right]_{T,x} = \left[\frac{\bar{V}_2}{RT}\right] \tag{B.1-5}$$

These partial derivatives are valid for either phase. The quantity H_2^o is the reference enthalpy for the solute and is only a function of temperature.

Equations (B.1-4) and (B.1-5) are substituted into Equation (B.1-3) once for the vapor phase and once for the liquid phase. The vapor phase is denoted by (v) and the liquid phase by (l). These intermediate equations are substituted into both sides of Equation (B.1-2) to yield

$$0 = -\left[\frac{\bar{H}_2^{\ell} - \bar{H}_2^{v}}{RT^2}\right]dT + \left[\frac{\bar{V}_2^{\ell} - \bar{V}_2^{v}}{RT}\right]dP + \left[\frac{\partial(\ell n\ \bar{f}_2^{\ell})}{\partial x_2}\right]_{T,P,y} dx_2 - \left[\frac{\partial(\ell n\ \bar{f}_2^{v})}{\partial y_2}\right]_{T,P,x} dy_2 \qquad \text{(B.1-6)}$$

Consider the case where the gas phase is ideal and the solvent is non-volatile. In that case, the composition of the gas phase is essentially constant and contains mostly pure solute. Equation (B.1-6) simplifies to

$$0 = -\left[\frac{\bar{H}_2^{\ell} - \bar{H}_2^{v}}{RT^2}\right]dT + \left[\frac{\bar{V}_2^{\ell} - \bar{V}_2^{v}}{RT}\right]dP + \left[\frac{\partial(\ell n\ \bar{f}_2^{\ell})}{\partial x_2}\right]_{T,P} dx_2 \qquad \text{(B.1-7)}$$

At $P < 1$ atm, the ideal gas condition is valid and $V_2^v >> V_2^l$. Therefore, $V_2^v = RT/P$. Assuming Henry's law is valid for the liquid phase, then $f_2^l = H_{2,1}x_2$ and

$$\left[\frac{\partial(\ell n\ \bar{f}_2^{\ell})}{\partial x_2}\right] = \frac{1}{x_2} \qquad \text{(B.1-8)}$$

Under these conditions f_2^l is approximately equal to the total system pressure. Defining the heat of solution, H_{soln}, as $H_2^l - H_2^v$ and substituting this definition along with the previous assumptions into Equation (B.1-7) yields

$$\left[\frac{d(\ell n\ H_{2,1})}{d(1/T)}\right] \approx \frac{\Delta H_{soln}}{R} \qquad \text{(B.1-9)}$$

Thus, the logarithm of the Henry's constant varies inversely with absolute temperature.

Appendix B.2

Vapor-Space Hold-Up

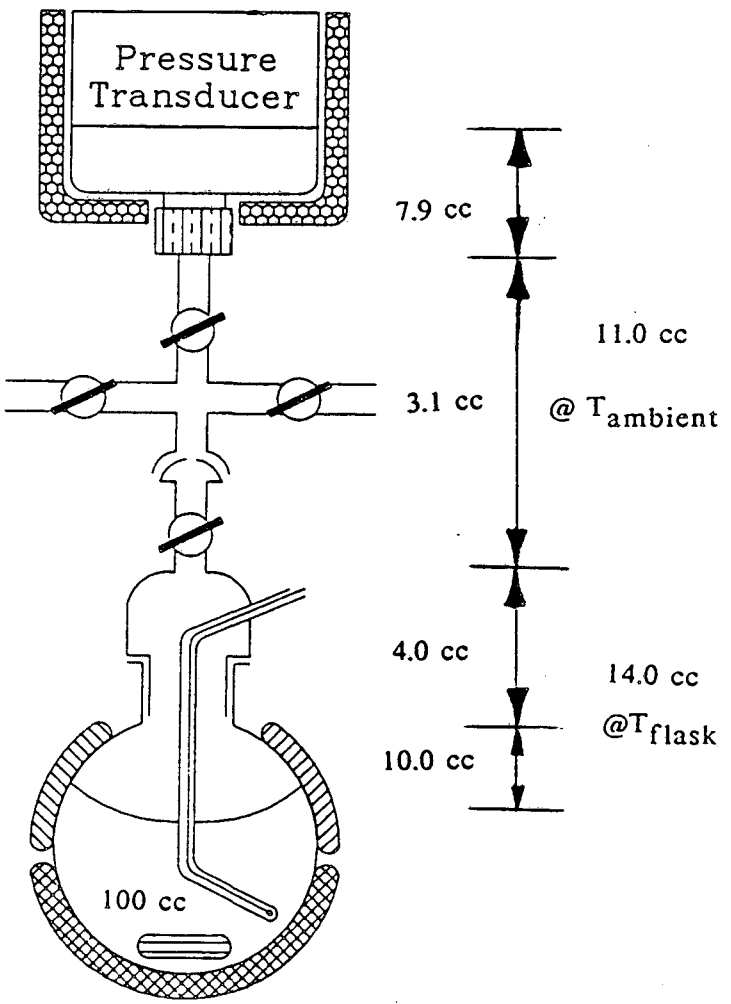

The amount of gas contained in the vapor space was estimated for the 100 ml flask by assuming that 11 ml of the gas volume is at ambient temperature and 14 ml is at the liquid temperature. The ideal gas condition applies in each section. The moles of gas in the upper (11 ml) section is

$$N_u = P(5.92*10^{-7}\ [\text{mole/mmHg}])$$

and the moles of gas in the lower (14 ml) section is

$$N_l = (2.25*10^{-4}\ [\text{mole-K/mmHg}])P/T$$

where pressure, P, is in mmHg and temperature, T, is in Kelvin. The total moles of gas held in the vapor space is

$$N_t = N_u + N_l = P(2.25*10^{-4}/T + 5.92*10^{-7})$$

As an example, consider the hydrogen sulfide-tetraglyme system. The data given in output file RUN28.DAT are used here. The percent of the total amount of gas in the system that is held-up in the vapor space was computed for minimum and maximum temperatures and compositions.

Case #1: Low Solute Composition

0.1011 gm H_2S = 2.97 * 10^{-3} moles H_2S

T (^oC)	P (mmHg)	N_T	% Hold-Up
15.1	18.5	$2.54*10^{-5}$	0.86
98.8	110.5	$1.32*10^{-4}$	4.50

Case #2: High Solute Composition

1.0003 gm H_2S = $2.94*10^{-2}$ moles H_2S

T (^oC)	P (mmHg)	N_T	% Hold-Up
15.0	181.2	$2.49*10^{-4}$	0.85
80.0	800.0	$9.83*10^{-4}$	3.30

The error in the liquid-phase composition is less than 5%. In most cases the 250 ml flask was used instead of the 100 ml flask to minimize this error.

Appendix B.3

EQUIPMENT SPECIFICATIONS

Table 1

SPECIFICATIONS: EQUILIBRIUM CELL

PRESSURE TRANSDUCER:
Absolute Pressure Gauge, MKS Baratron, Model 222B, 0-1000 mmHg,
Supply: ±15vdc, Output: 0-10vdc

TEMPERATURE:
T-type thermocouple (22 gauge wire)

HOTPLATE/STIRRER:
Dataplate, PMC Industries Inc., Model 440P, with computer (RS232) interface

READOUT/POWER SUPPLY:
Author Fabricated, Dual channel voltmeter with power supply.
Digital Voltmeter: Newport, Model 203A-04, ± 19.99 Vdc F.S.
Power Supply: Power-One, Model HAA15-0.8-A, ± 15 Vdc at 0.8 A

Table 2

SPECIFICATIONS: GAS ADDITION SYSTEM

GAS BOMB:
Sample cylinder, Whitey, Model 3047-HDF4-300

SOLENOID VALVES:
Skinner, Model V52DB2052, 110 VAC coil, 3/16" orifice, 1/4" NPT, Stainless Steel, Viton and Buna plungers.

FLASK FILL (RATE) VALVE:
Nupro, Model B-4BMG, bellows, metering valve, Stainless Steel.

BOMB FILL (RATE) VALVE:
Nupro, Model S-SS2-A, fine metering valve, 1/8" swagelock

PRESSURE TRANSDUCER:
Omega Engineering Inc., Model PX176-050A-5V, 0-50 psia, Supply 15 Vdc, Output 1-6 Vdc

READOUT/POWER SUPPLY:
Refer to Table 3

TEMPERATURE:
T-Type thermocouple

Table 3

SPECIFICATIONS: DATA ACQUISITION AND CONTROL HARDWARE

COMPUTER:
Zenith PC, Model Z150, (2) 5 1/4" disk drives, 320K memory, (1) serial (RS232) port, (1) parallel port, RGB monitor

PRINTER:
Epson, Model MX80, dot matrix, parallel interface

CODE ACTIVATED SWITCH:
Black Box Corp., Model CAS-4Q, (1) serial (RS232) input, (4) serial (RS232) outputs

A/D CONVERTER:
Omega Engineering Inc., White Box - Interfacing Microcomputer, Model WB-40, (8) 0-5 vdc analog inputs, (4) digital (on/off) outputs, serial (RS232) interface

SIGNAL CONDITIONER:
Author fabricated, "Red Box", (8) analog channels, (4) output drivers.

THERMOCOUPLE CONVERTOR:
Omega Engineering Inc., Thermocouple to analog convertor, Model TAC-386, 1mv/^{o}C, 9 Vdc battery required

THERMOCOUPLE AMPLIFIER:
Author fabricated, T-Type thermocouple amplifier, Analog Devices-Model AD524B, precision instrumentation amplifier, x1000 amplification, reference junction - ice bath

OUTPUT DRIVER:
Solid state relays, 3-32 vdc input, load; 115 Vac at 10 amps.

Appendix B.4

Control Program Input Data
(Sample)

```
RUN
ABORT RUN? (Y OR N)                                N
NAME OF PSEUDO-SOLVENT                             TETRAGLYME
NAME OF GAS                                        H2S
MOLECULAR WEIGHT OF PURE SOLVENT                        ? 222.28
MOLECULAR WEIGHT OF GAS                                 ? 34.08
2nd VIRIAL COEFF. SLOPE (cc/gmole/K)                    ? 1.70
2nd VIRIAL COEFF. Y-INTERCEPT (cc/gmole)                ? -714.4
WEIGHT OF SOLVENT IN SAMPLE (GM)                        ? 85.17
WEIGHT OF WATER IN SAMPLE (GM)                          ?  0.00
GRAMS OF GAS PER ADDITION                               ?  0.10
INITIAL AMOUNT OF GAS IN FLASK (GM)                     ?  0.00
MAXIMUM NUMBER OF GAS ADDITIONS                         ? 10
OUTPUT FILE NAME (B:RUN#.DAT)                      B:RUN28.DAT
ENTER THE DATE: mm/dd/yyyy                         8/2/85
ARE INPUTS OK? (Y OR N)                            Y
SOLVENT PVAP DETERMINATION? (Y OR N)               Y
```

Appendix B.5

Experiment Control Program

```
1  REM ***************************************************************
2  REM     PROGRAM CONTROL.BAS IS THE CONTROL PROGRAM FOR MEASURING
3  REM     GAS SOLUBILITY IN PURE SOLVENTS OR MIXTURES OF WATER AND
4  REM     SOLVENT.  THE PROGRAM IS WRITTEN IN GW BASIC FOR A ZENITH
5  REM     PERSONAL COMPUTER BY STEVEN F. SCIAMANNA.
9  REM ***************************************************************
10 REM
15 ON ERROR GOTO 3000                                  'abort run if any system error occurs
20 CLOSE #1                                            'close communications port (just in case)
25 OPEN "COM1:300,N,8,2" AS #1                         'open communications port to BLACK BOX
30 OUTA$="1"                                           'close valve A
35 OUTB$="1"                                           'close valve B
40 OUTC$="1"                                           'close valve C
45 OUTD$="1"                                           'close valve D
50 GOSUB 2000                                          'call valve opening/closing subroutine
55 YES$="Y"
60 LINE INPUT "ABORT RUN? (Y OR N)                ";YORN$
65 IF YORN$<>YES$ GOTO 80                              'should run be aborted ?
70 CLOSE #1                                            'close communications to BLACK BOX
75 STOP                                                'stop program
80 LINE INPUT "NAME OF PSEUDO-SOLVENT             "; SOLVENT$
85 LINE INPUT "NAME OF GAS                        "; GAS$
90 INPUT "MOLECULAR WEIGHT OF PURE SOLVENT        "; SOLMW
95 INPUT "MOLECULAR WEIGHT OF GAS                 "; GASMW
100 INPUT "2nd VIRIAL COEFF. SLOPE (cc/gmole/K)   "; SLOPE
105 INPUT "2nd VIRIAL COEFF. Y-INTERCEPT (cc/gmole) "; YINTERCEPT
110 INPUT "WEIGHT OF SOLVENT IN SAMPLE (GM)       "; GMSOL
112 INPUT "WEIGHT OF WATER IN SAMPLE (GM)         "; GMH2O
115 INPUT "GRAMS OF GAS PER ADDITION              "; GMGASADD
120 INPUT "INITIAL AMOUNT OF GAS IN FLASK (GM)    "; SUMGMGAS
125 INPUT "MAXIMUM NUMBER OF GAS ADDITIONS        "; LOOPMAX
130 LINE INPUT "OUTPUT FILE NAME (B:RUN#.DAT)     "; FILENAME$
135 LINE INPUT "ENTER THE DATE: mm/dd/yyyy        "; MDY$
140 LINE INPUT "ARE INPUTS OK? (Y OR N)           "; YORN$
145 IF YORN$ <> YES$ GOTO 60
146 LINE INPUT "SOLVENT PVAP DETERMINATION? (Y OR N) ";YORN$
150 DATE$=MDY$
```

```
155 REM
160 OPEN FILENAME$ FOR OUTPUT AS #2                          'open output data file
162 H2OMW=18.02                                              'molecular weight of water
163 MOLESOL=GMSOL/SOLMW                                      'moles of solvent present
164 MOLEH2O=GMH2O/H2OMW                                      'moles of water present
165 GMSAMPLE=GMSOL+GMH2O                                     'total mass of sample
166 MOLESAMPLE=MOLESOL+MOLEH2O                               'total moles in sample
167 SAMPLEMW=GMSAMPLE/MOLESAMPLE                             'molecular weight of sample
169 REM
170 WRITE #2, FILENAME$, DATE$
175 WRITE #2, SOLVENT$, SAMPLEMW, GMSAMPLE
180 WRITE #2, GAS$, GASMW, GMGASADD
185 REM
195 FORM$="####.#,     ###.#,  ##.###^^^^,  ##.####"
197 FORM2$="####.#,     ###.#,  ##.###^^^^,  ##.####,  &"
200 HEAD$="P(mmhg)      T(C)       XGAS      GMGAS    TIME"
202 COLON$=":"
204 SUMMOLEGAS=SUMGMGAS/GASMW                                'initial total moles of gas
205 TOTALMOLE=SUMMOLEGAS+MOLESAMPLE                          'total moles in the flask
207 XGAS=SUMMOLEGAS/TOTALMOLE                                'mole fraction of gas
210 PBOMBMAX=40                                              'maximum bomb fill pressure (psia)
215 PBOMBMIN=15                                              'minimum bomb drain pressure (psia)
220 TFLASKMAX=30                                             'maximum allowable flask temperature (C)
225 TFLASKMIN=9                                              '"cool to" flask temperature (C)
230 PFLASKMAX=800                                            'maximum allowable flask pressure (mmhg)
235 PFLASKFILL=500                                           '"cut-off" pressure for filling (mmhg)
237 TIMEOFF=0
245 TINTERVAL=2                                              'temp. (C) interval for data acquisition
246 TSTART=10
247 FLAG=0
250 LOOP=0
252 TIME$="0"
254 LPRINT "GAS IS ";GAS$,"SOLVENT IS ";SOLVENT$
255 LPRINT "OUTPUT FILE NAME IS ";FILENAME$
260 LPRINT "DATE OF RUN IS ";DATE$
265 LPRINT
266 REM ************************************************
```

```
267 REM            BEGINNING OF SEQUENCE
268 REM ************************************************
269 IF YORN$<>YES$ GOTO 280
270 LPRINT
271 LPRINT "----------- SOLVENT VAPOR PRESSURE ----------"
272 LPRINT
273 TNEXT=TSTART
274 GOSUB 8000                                  'call the heating sequence subroutine
275 GOSUB 9000                                  'call the cooling sequence subroutine
280 LOOP=LOOP+1                                 'increment gas addition iteration counter
285 REFILL=0                                    'turn off multiple flask refills
290 IF LOOP>LOOPMAX GOTO 500                    'completed all gas additions
291 TNEXT=TSTART                                'first data point (C)
292 LPRINT
293 LPRINT "----------- GAS ADDITION # ";LOOP;" -----------"
294 LPRINT
295 TIMEOFF=TIMEOFF+TIMER                       'compute elapsed time since last timer reset
296 TIME$="0"                                   'reset timer to zero
297 HRS=TIMEOFF/3600                            'convert timer offset to hours, minutes and seconds
298 HRS=INT(HRS)
299 MIN=TIMEOFF/60-HRS*60
300 MIN=INT(MIN)
301 SEC=TIMEOFF-60*(MIN+HRS*60)
302 SEC=INT(SEC)
303 ET$=STR$(HRS)+COLON$+STR$(MIN)+COLON$+STR$(SEC)   'create string of hours, minutes and seconds
310 LPRINT "ELAPSED TIME =";ET$
315 GASADD=GMGASADD                             'set the amount of gas added to input value
320 GOSUB 5000                                  'estimate final bomb pressure necessary
325 LPRINT USING "PBOMBFINAL (PSIA) = ##.##"; PBOMBFINAL
330 IF PBOMBFINAL > PBOMBMIN GOTO 380           'is there enough gas in the flask?
335 GOSUB 6000                                  'refill the bomb to PBOMBMAX
345 GOSUB 5000                                  'estimate final bomb pressure necessary
350 LPRINT USING "PBOMBFINAL (PSIA) = ##.##"; PBOMBFINAL
355 REFILL =0                                   'turn off multiple flask refills
360 IF PBOMBFINAL > PBOMBMIN GOTO 380           'filled bomb, are flask refills necessary
365 REFILL=1                                    'turn on multiple flask refills
370 LPRINT "BOMB REFILL IS NECESSARY"
```

```
375 PBOMBFINAL=PBOMBMIN                                  'drain bomb to PBOMBMIN
380 GOSUB 20000                                          'read initial bomb temperature
385 GOSUB 60000                                          'read initial bomb pressure (psia)
390 TBI=TBOMB
395 PBI=PBOMB
400 GOSUB 7000                                           'fill flask
405 IF FLAG=1 GOTO 500                                   'pressure too high to start filling-abort run
410 GOSUB 20000                                          'read final bomb temperature
415 GOSUB 60000                                          'read final bomb pressure (psia)
420 PBF=PBOMB
425 TBF=TBOMB
430 GOSUB 4000                                           'calculate amount of gas added to flask
435 SUMGMGAS=SUMGMGAS+GMGAS                              'update the amount of gas in the flask
440 IF FLAG=2 GOTO 465                                   'is this the last run? no more gas added
445 IF REFILL=0 GOTO 465                                 'are more bomb & flask refills necessary
450 GASADD=GASADD-GMGAS                                  'amount of gas to be added in refill
455 IF GASADD<=0 GOTO 465                                'trap if amount of gas goes negative
460 GOTO 335                                             'go back and refill the bomb
465 SUMMOLEGAS=SUMGMGAS/GASMW                            'calculate total moles of gas present
470 XGAS=SUMMOLEGAS/(SUMMOLEGAS+MOLESAMPLE)              'calculate gas mole fraction
475 GOSUB 8000                                           'heating sequence
480 GOSUB 9000                                           'cooling sequence
485 IF FLAG <> 0 GOTO 500                                'if this is the last run, exit from loop
490 GOTO 280                                             'go back to beginning of sequence
492 REM ************************************************
495 REM        END OF SEQUENCE - BACK TO BEGINNING
497 REM ************************************************
500 GOSUB 3000                                           'normal program exit
505 STOP
2000 REM *******************************************
2005 REM        VALVE OPENING/CLOSING ROUTINE
2010 REM *******************************************
2015 PRINT #1, CHR$(19)+CHR$(1)                          'switch BLACK BOX to WHITE BOX
2020 VALVE$="O"+OUTD$+OUTC$+OUTB$+OUTA$
2025 PRINT #1, VALVE$
2030 RETURN
3000 REM *******************************************
```

```
3005 REM        ABORT ROUTINE RESETS EVERYTHING
3010 REM ********************************************
3012 PRINT "SYSTEM ERROR = ";ERR
3015 LPRINT "ABORT RUN"
3020 OUTA$="1"
3025 OUTB$="1"
3030 OUTC$="0"                                          'leave air blower on
3035 OUTD$="1"
3040 GOSUB 2000
3045 PRINT #1, CHR$(19) + CHR$(2)                       'set black box to port B (DATAPLATE)
3047 PRINT #1, "R"+"0"+CHR$(13)                         'turn off ramp
3050 PRINT #1, "?"+"T"+"0"+CHR$(13)+"B"                 'turn off hotplate heater & beep
3055 CLOSE #2
3060 DELAY=TIMER+2
3062 IF TIMER < DELAY GOTO 3062
3063 GOSUB 10000
3064 IF TFLASK > TFLASKMIN GOTO 3060                    'has flask cooled down to TFLASKMIN
3065 OUTC$="1" : GOSUB 2000                             'call flask opening/closing routine
3066 CLOSE #1                                           'close communications to BLACK BOX
3067 STOP                                               'stop the program
3070 RETURN
4000 REM ********************************************
4005 REM     COMPUTE THE MASS (GM) OF GAS ADDED
4010 REM ********************************************
4015 R=1205.81                                          'gas constant: cc*psia/gmole/K
4020 VOLUME=338.8                                       'bomb volume w/o gauge in cc's
4025 TTBI=TBI+273.15                                    'convert final bomb temp. to kelvin
4030 TTBF=TBF+273.15                                    'convert final bomb temp. to kelvin
4035 BI=SLOPE*TTBI+YINTERCEPT                           'initial bomb 2nd virial coefficient
4040 BF=SLOPE*TTBF+YINTERCEPT                           'final bomb 2nd virial coefficient
4045 ZI=1+BI*PBI/(R*TTBI)                               'initial bomb compressibility factor
4050 ZF=1+BF*PBF/(R*TTBF)                               'final bomb compressibility factor
4055 GMGAS=(PBI/(ZI*TTBI)-PBF/(ZF*TTBF))*VOLUME*GASMW/R 'compute the mass (gm) of gas added
4060 LPRINT USING "GMS OF GAS ADDED = #.###";GMGAS
4065 RETURN
5000 REM ******************************************************
5005 REM     THIS SUBROUTINE ESTIMATES FINAL BOMB PRESSURE
```

```
5006 REM     NECESSARY TO DELIVER THE DESIRED MASS OF GAS
5010 REM ******************************************************
5015 GOSUB 20000                                        'read bomb temperature
5020 GOSUB 60000                                        'read bomb pressure
5025 R=1205.81                                          'gas constant: cc*psia/gmole/K
5030 VOLUME =338.8                                      'bomb volume w/o gauge in cc's
5035 T=TBOMB+273.15                                     'convert temperature to kelvin
5040 P=PBOMB
5045 B=SLOPE*T+YINTERCEPT                               'calculate 2nd virial coefficient
5050 Z=1+B*P/R/T                                        'calculate compressibility factor
5055 TEMP=P/Z-GASADD*R*T/GASMW/VOLUME
5060 PBOMBFINAL=TEMP/(1-TEMP*B/R/T)                     'calculate final bomb pressure
5065 IF PBOMBFINAL<0 THEN PBOMBFINAL=0                  'trap negative pressures
5070 RETURN
6000 REM ************************************************
6005 REM            FILLING SEQUENCE FOR SAMPLE BOMB
6010 REM ************************************************
6015 LPRINT "START BOMB FILLING SEQUENCE"
6020 GOSUB 60000                                        'read bomb pressure
6025 PBOMBLAST=PBOMB
6030 IF PBOMB>PBOMBMAX GOTO 6155                        'bomb is already filled to maximum
6035 LPRINT "OPEN BOMB FILL VALVE"
6040 OUTA$="0" : GOSUB 2000                             'open bomb fill valve
6045 DELAY2=TIMER+60
6050 DELAY=TIMER+1                                      'wait 1 sec between reads
6055 IF TIMER<DELAY GOTO 6055
6060 GOSUB 60000                                        'read bomb pressure
6065 IF TIMER <DELAY2 GOTO 6105
6070 DELAY2=TIMER+60                                    'check every 60 sec.s if bomb is actually filling
6075 CHANGE=(PBOMB-PBOMBLAST)/PBOMB                     '(i.e. the valve is not stuck).  if it is not,
6080 CHANGE=ABS(CHANGE)                                 'then abort the run.
6085 PBOMBLAST=PBOMB
6090 IF CHANGE > .01 GOTO 6105
6095 LPRINT "BOMB IS NOT FILLING - ABORT RUN"
6100 GOSUB 3000                                         'call abort sequence-bomb fill valve is stuck closed
6105 IF PBOMB<PBOMBMAX GOTO 6050                        'bomb is still filling
6110 LPRINT "CLOSE BOMB FILL VALVE"
```

```
6115 OUTA$="1" : GOSUB 2000                                  'close bomb fill valve
6120 DELAY=TIMER+60*5                                        'wait for 5 minutes
6125 LPRINT "WAITING FOR 5 MINUTES"
6130 DELAY2=TIMER+2
6135 IF TIMER<DELAY2 GOTO 6135
6140 GOSUB 60000
6145 IF PBOMB>PBOMBMAX+3 THEN GOSUB 3000                     'bomb fill valve is leaking - stop run
6150 IF TIMER<DELAY GOTO 6130
6155 LPRINT "LEAVE BOMB FILLING SEQUENCE"
6160 RETURN
7000 REM ***************************************************
7005 REM              FILLING SEQUENCE FOR SAMPLE FLASK
7010 REM ***************************************************
7015 LPRINT "START FILLING SEQUENCE FOR SAMPLE FLASK"
7020 OUTC$="0" : GOSUB 2000                                  'turn on air blower
7025 LPRINT "AIR BLOWER IS ON"
7030 DELAY=TIMER+1
7035 IF TIMER<DELAY GOTO 7035
7040 GOSUB 10000                                             'read flask temperature
7045 IF TFLASK > TFLASKMIN GOTO 7030                         'check if flask temperature is cool yet
7050 LPRINT "FLASK TEMPERATURE IS COOL ENOUGH TO CONTINUE"
7055 GOSUB 50000                                             'read flask pressure
7060 IF PFLASK > PFLASKFILL GOTO 7135                        'if flask pressure is above the initial
7065 LPRINT "FLASK PRESSURE IS LOW ENOUGH TO START FILLING"
7070                                                         'maximum abort the filling sequence
7075 OUTB$="0" : GOSUB 2000                                  'open flask fill valve
7080 LPRINT "OPEN FLASK FILL VALVE"
7085 LPRINT "CURRENTLY FILLING FLASK WITH GAS"
7090 DELAY=TIMER+1                                           'wait 1 sec between reads
7095 IF TIMER<DELAY GOTO 7095
7100 GOSUB 50000                                             'read flask pressure
7105 IF PFLASK > PFLASKFILL GOTO 7150                        'has flask pressure exceeded maximum?
7110 GOSUB 60000                                             'read bomb pressure
7115 IF PBOMB  > PBOMBFINAL  GOTO 7090                       'is bomb at final pressure?
7120 FLAG=0
7125 LPRINT "NORMAL EXIT FROM FLASK FILLING SEQUENCE"
7130 GOTO 7160
```

```
7135 FLAG=1
7140 LPRINT "FLASK PRESSURE TOO HIGH - ABORT FILLING SEQUENCE"
7145 GOTO 7160
7150 FLAG=2
7155 LPRINT "DID NOT ADD ENTIRE AMOUNT OF GAS - LAST RUN"
7160 OUTB$="1" : GOSUB 2000                                  'close flask fill valve
7165 LPRINT "CLOSED FLASK FILL VALVE"
7180 LPRINT "WAITING 10 MINUTES"
7185 DELAY=TIMER +60*10                                      'wait for 10 minutes
7190 DELAY2=TIMER+2
7195 IF TIMER<DELAY2 GOTO 7195
7200 GOSUB 50000
7205 IF PFLASK>PFLASKMAX THEN GOSUB 3000
7210 IF TIMER < DELAY GOTO 7190
7212 LPRINT "TURNED OFF AIR BLOWER"
7214 OUTC$="1" : GOSUB 2000                                  'turn off air blower
7215 LPRINT "LEAVING SAMPLE FLASK FILLING SEQUENCE"
7220 RETURN
8000 REM ************************************************
8005 REM                HEATING SEQUENCE
8010 REM ************************************************
8015 LPRINT "START HEATING SEQUENCE"
8020 OUTC$="0" : GOSUB 2000                                  'turn on air blower
8025 GOSUB 10000
8030 IF TFLASK < TFLASKMIN GOTO 8050                         'make sure flask temp. is low enough
8035 DELAY=TIMER+5
8040 IF TIMER<DELAY GOTO 8040
8045 GOTO 8025
8050 OUTC$="1" : GOSUB 2000                                  'turn off air blower
8055 GOSUB 10000                                             'read flask temperature
8060 GOSUB 50000                                             'read flask pressure
8065 RAMP=9                                                  'ramp rate: 1 C per 60 sec
8070 RAMP$=STR$(RAMP)
8072 RAMP$=RIGHT$(RAMP$,1)
8075 RATE=RAMP*10
8080 LPRINT "HEATING RATE = 1(C) PER ";RATE;" SEC.S"
8085 LPRINT
```

```
8090 LPRINT HEAD$
8095 REM PRINT #2, USING FORM$; PFLASK,TFLASK,XGAS,SUMGMGAS
8100 LPRINT USING FORM2$; PFLASK,TFLASK,XGAS,SUMGMGAS,TIME$
8105 PRINT #1, CHR$(19) + CHR$(2)                    'set black box to port B
8110 PRINT #1, "R"+RAMP$+CHR$(13)+"B"                'ramp hotplate
8115 DELAY=TIMER+2                                   'wait 2 sec before taking data
8120 IF TIMER < DELAY GOTO 8120
8125 GOSUB 10000                                     'read flask temperature
8130 GOSUB 50000                                     'read flask pressure
8135 IF TFLASK > TFLASKMAX GOTO 8175                 'stop run at maximum temperature
8140 IF PFLASK > PFLASKMAX GOTO 8175                 'stop run at maximum pressure
8145 IF TFLASK < TNEXT GOTO 8115                     'is it time for a data point ?
8150 PRINT #2, USING FORM$; PFLASK,TFLASK,XGAS,SUMGMGAS
8155 LPRINT USING FORM2$; PFLASK,TFLASK,XGAS,SUMGMGAS,TIME$
8160 TNEXT=TNEXT+TINTERVAL                           'set next temperature point
8165 GOTO 8115                                       'continue loop
8170 REM
8175 PRINT #1, CHR$(19)+CHR$(2)                      'set black box to port B
8180 PRINT #1, "R"+"O"+CHR$(13)+"B"                  'set hotplate to current temperature
8185 LPRINT "SET HOTPLATE AT CURRENT TEMPERATURE"
8190 DELAY=TIMER+60*5                                'wait for 5 minutes
8195 LPRINT "WAITING FOR 5 MINUTES"
8200 DELAY2=TIMER+2
8205 IF TIMER < DELAY2 GOTO 8205
8210 GOSUB 10000
8215 GOSUB 50000
8220 IF TFLASK > TFLASKMAX+10 THEN GOSUB 3000        'check flask temp. while waiting
8225 IF PFLASK > PFLASKMAX+50 THEN GOSUB 3000        'check flask pres. while waiting
8230 IF TIMER < DELAY GOTO 8200
8235 GOSUB 10000                                     'read final flask temperature
8240 GOSUB 50000                                     'read final flask pressure
8245 PRINT #2, USING FORM$; PFLASK,TFLASK,XGAS,SUMGMGAS
8250 LPRINT USING FORM2$; PFLASK,TFLASK,XGAS,SUMGMGAS,TIME$
8255 PRINT #1, CHR$(19)+CHR$(2)                      'set blackbox to port B
8260 PRINT #1, "?"+"T"+"O"+CHR$(13)+"B"              'turn hotplate off & beep
8265 LPRINT "LEAVING HEATING SEQUENCE"
8270 RETURN
```

```
9000 REM ************************************************
9005 REM                  COOLING SEQUENCE
9010 REM ************************************************
9015 LPRINT "START COOLING SEQUENCE"
9020 OUTC$="0" : GOSUB 2000                          'turn on air blower
9025 GOSUB 10000                                     'read flask temperature
9030 GOSUB 50000                                     'read flask pressure
9035 REM PRINT #2, USING FORM$; PFLASK,TFLASK,XGAS,SUMGMGAS
9040 LPRINT USING FORM2$; PFLASK,TFLASK,XGAS,SUMGMGAS,TIME$
9045 TNEXT=TNEXT-TINTERVAL                           'set next data point
9050 DELAY=TIMER+2                                   'wait 2 sec between data input
9055 IF TIMER < DELAY GOTO 9055
9060 GOSUB 10000                                     'read flask temperature
9065 IF TFLASK < TFLASKMIN GOTO 9095                 'reached minimum flask temperature
9070 IF TFLASK > TNEXT GOTO 9050                     'is it time for a data point ?
9075 GOSUB 50000                                     'read flask pressure
9080 REM PRINT #2, USING FORM$; PFLASK,TFLASK,XGAS,SUMGMGAS
9085 LPRINT USING FORM2$; PFLASK,TFLASK,XGAS,SUMGMGAS,TIME$
9090 GOTO 9045                                       'continue loop
9095 OUTC$="1" : GOSUB 2000                          'turn off air blower
9100 GOSUB 10000                                     'read flask temperature
9105 GOSUB 50000                                     'read flask pressure
9110 LPRINT USING FORM2$; PFLASK,TFLASK,XGAS,SUMGMGAS,TIME$
9115 REM PRINT #2, USING FORM$; PFLASK,TFLASK,XGAS,SUMGMGAS
9120 LPRINT "LEAVING COOLING SEQUENCE"
9125 RETURN
10000 REM ****************************************
10001 REM     READ FLASK TEMPERATURE (C)
10002 REM ****************************************
10005 PRINT #1, CHR$(19) + CHR$(1)                   'set BLACK BOX to Port A (WHITE BOX)
10010 TSCALE=1.0047                                  'scale factor correction
10012 PRINT #1, "N"
10015 PRINT #1, "I1"
10020 PRINT #1, "R"
10025 LINE INPUT #1, TFLASK$
10030 TMV=TSCALE*VAL(TFLASK$)*5/19999                'compute reading to mV
10031 A0=-4.92587E-05
```

```
10032 A1=25.9305
10033 A2=-.72922
10034 A3=.0308414
10035 TFLASK=A0+TMV*(A1+TMV*(A2+TMV*A3))                    'compute temperature by empirical expression.
10040 RETURN
20000 REM ************************************
20001 REM      READ BOMB TEMPERATURE (C)
20002 REM ************************************
20005 PRINT #1, CHR$(19) + CHR$(1)                          'set BLACK BOX to port A (WHITE BOX)
20010 TSCALE=100                                            'scale factor for Omega Thermocouple Amplifier (TAC-386)
20012 PRINT #1, "N"
20015 PRINT #1, "I2"
20020 PRINT #1, "R"
20025 LINE INPUT #1, TBOMB$
20030 TBOMB=TSCALE*VAL(TBOMB$)*5/19999                      'compute temperature (C)
20035 RETURN
30000 REM ************************************
30001 REM      READ ROOM TEMPERATURE (C)
30002 REM ************************************
30005 PRINT #1, CHR$(19) + CHR$(1)                          'set BLACK BOX to port A (WHITE BOX)
30010 TSCALE=100                                            'scale factor for Omega Thermocouple Amplifier (TAC-386)
30012 PRINT #1, "N"
30015 PRINT #1, "I3"
30020 PRINT #1, "R"
30025 LINE INPUT #1, TROOM$
30030 TROOM=TSCALE*VAL(TROOM$)*5/19999                      'compute temperature (C)
30032 TROOM=.99423*TROOM-.66614
30035 RETURN
50000 REM ************************************
50001 REM     READ FLASK PRESSURE  (MMHG)
50002 REM ************************************
50005 PRINT #1, CHR$(19) + CHR$(1)                          'set BLACK BOX to port A (WHITE BOX)
50010 PSCALE=200                                            'scale factor for MKS Baratron pressure transducer
50012 PRINT #1, "N"
50015 PRINT #1, "I5"
50020 PRINT #1, "R"
50025 LINE INPUT #1, PFLASK$
```

```
50030 PFLASK=PSCALE*VAL(PFLASK$)*5/19999                    'compute flask pressure in mmHg
50032 IF PFLASK < 0 THEN PFLASK=0                           'zero if flask pressure reading goes negative
50035 RETURN
60000 REM ************************************
60001 REM     READ BOMB PRESSURE   (PSIA)
60002 REM ************************************
60005 PRINT #1, CHR$(19) + CHR$(1)                          'set BLACK BOX to port A (WHITE BOX)
60010 PSCALE=20                                             'scale factor for bomb pressure transducer
60015 OFFSET=10                                             'offset factor for bomb pressure transducer
60017 PRINT #1, "N"
60020 PRINT #1, "I6"
60025 PRINT #1, "R"
60030 LINE INPUT #1, PBOMB$
60035 PBOMB=PSCALE*VAL(PBOMB$)*5/19999-OFFSET               'compute bomb pressure (psia)
60037 IF PBOMB < 0 THEN PBOMB=0                             'zero if flask pressure reading goes negative
60040 RETURN
```

Appendix B.6

Control Program Run-Time Output (Sample)

```
* GAS IS H2S    SOLVENT IS TETRAGLYME
OUTPUT FILE NAME IS B:RUN28.DAT
DATE OF RUN IS 08-02-1985


********* SOLVENT VAPOR PRESSURE ***********

START HEATING SEQUENCE
HEATING RATE = 1(C) PER  60  SEC.S

P(mmhg)       T(C)        XGAS        GMGAS     TIME
   0.3,       11.2,    0.000E+00,    0.0000,   00:00:09
   0.3,       15.0,    0.000E+00,    0.0000,   00:06:10
   0.4,       20.0,    0.000E+00,    0.0000,   00:10:07
   0.4,       25.0,    0.000E+00,    0.0000,   00:14:54
   0.4,       30.0,    0.000E+00,    0.0000,   00:20:03
   0.4,       35.0,    0.000E+00,    0.0000,   00:24:55
   0.5,       40.0,    0.000E+00,    0.0000,   00:29:42
   0.6,       45.0,    0.000E+00,    0.0000,   00:34:52
   0.7,       50.0,    0.000E+00,    0.0000,   00:39:54
   0.7,       55.1,    0.000E+00,    0.0000,   00:45:00
   0.8,       60.0,    0.000E+00,    0.0000,   00:49:36
   0.9,       65.0,    0.000E+00,    0.0000,   00:54:20
   1.2,       70.0,    0.000E+00,    0.0000,   00:59:15
   1.4,       75.1,    0.000E+00,    0.0000,   01:04:14
   1.6,       80.0,    0.000E+00,    0.0000,   01:09:21
   2.0,       85.0,    0.000E+00,    0.0000,   01:14:12
   2.2,       90.1,    0.000E+00,    0.0000,   01:19:07
   2.7,       95.1,    0.000E+00,    0.0000,   01:23:54
SET HOTPLATE AT CURRENT TEMPERATURE
WAITING FOR 5 MINUTES
   3.1,       99.0,    0.000E+00,    0.0000,   01:33:39
LEAVING HEATING SEQUENCE
START COOLING SEQUENCE
   3.1,       99.1,    0.000E+00,    0.0000,   01:33:43
   2.6,       94.8,    0.000E+00,    0.0000,   01:34:16
   2.2,       89.6,    0.000E+00,    0.0000,   01:34:37
   1.9,       85.0,    0.000E+00,    0.0000,   01:34:55
   1.7,       79.7,    0.000E+00,    0.0000,   01:35:16
   1.5,       74.8,    0.000E+00,    0.0000,   01:35:36
   1.3,       69.5,    0.000E+00,    0.0000,   01:36:00
   1.2,       64.6,    0.000E+00,    0.0000,   01:36:24
   1.1,       59.7,    0.000E+00,    0.0000,   01:36:51
   1.0,       54.6,    0.000E+00,    0.0000,   01:37:20
   0.9,       49.6,    0.000E+00,    0.0000,   01:37:52
   0.9,       44.7,    0.000E+00,    0.0000,   01:38:28
   0.8,       39.8,    0.000E+00,    0.0000,   01:39:09
   0.7,       35.0,    0.000E+00,    0.0000,   01:39:55
   0.7,       30.0,    0.000E+00,    0.0000,   01:40:53
   0.7,       25.0,    0.000E+00,    0.0000,   01:42:06
   0.7,       19.9,    0.000E+00,    0.0000,   01:43:43
   0.7,       15.0,    0.000E+00,    0.0000,   01:46:02
   0.7,       12.9,    0.000E+00,    0.0000,   01:47:26
LEAVING COOLING SEQUENCE
```

********** GAS ADDITION # 1 **********

ELAPSED TIME =01:47:30
PBOMBFINAL (PSIA) = 25.07
START FILLING SEQUENCE FOR SAMPLE FLASK
AIR BLOWER IS ON
FLASK TEMPERATURE IS COOL ENOUGH TO CONTINUE
FLASK PRESSURE IS LOW ENOUGH TO START FILLING
OPEN FLASK FILL VALVE
CURRENTLY FILLING FLASK WITH GAS
NORMAL EXIT FROM FLASK FILLING SEQUENCE
CLOSED FLASK FILL VALVE
TURNED OFF AIR BLOWER
WAITING 10 MINUTES
LEAVING SAMPLE FLASK FILLING SEQUENCE
GMS OF GAS ADDED = 0.101
START HEATING SEQUENCE
HEATING RATE = 1(C) PER 60 SEC.S

P(mmhg)	T(C)	XGAS	GMGAS	TIME
17.0,	11.9,	7.685E-03,	0.1011,	01:59:30
18.5,	15.1,	7.685E-03,	0.1011,	02:03:59
21.4,	20.0,	7.685E-03,	0.1011,	02:08:13
24.5,	25.1,	7.685E-03,	0.1011,	02:13:08
28.1,	30.1,	7.685E-03,	0.1011,	02:18:29
32.0,	35.0,	7.685E-03,	0.1011,	02:22:55
36.1,	40.0,	7.685E-03,	0.1011,	02:27:42
40.6,	45.1,	7.685E-03,	0.1011,	02:32:59
45.4,	50.0,	7.685E-03,	0.1011,	02:37:44
50.5,	55.0,	7.685E-03,	0.1011,	02:42:54
56.1,	60.0,	7.685E-03,	0.1011,	02:48:00
62.0,	65.0,	7.685E-03,	0.1011,	02:53:09
67.9,	70.0,	7.685E-03,	0.1011,	02:57:35
74.4,	75.0,	7.685E-03,	0.1011,	03:02:37
81.3,	80.0,	7.685E-03,	0.1011,	03:07:32
88.8,	85.1,	7.685E-03,	0.1011,	03:13:04
96.1,	90.1,	7.685E-03,	0.1011,	03:18:07
103.6,	95.0,	7.685E-03,	0.1011,	03:23:13

SET HOTPLATE AT CURRENT TEMPERATURE
WAITING FOR 5 MINUTES

110.5,	98.8,	7.685E-03,	0.1011,	03:30:49

LEAVING HEATING SEQUENCE
START COOLING SEQUENCE

110.6,	98.8,	7.685E-03,	0.1011,	03:30:53
105.6,	94.5,	7.685E-03,	0.1011,	03:31:25
100.0,	89.4,	7.685E-03,	0.1011,	03:31:46
94.6,	84.8,	7.685E-03,	0.1011,	03:32:04
88.3,	79.6,	7.685E-03,	0.1011,	03:32:25
82.0,	74.7,	7.685E-03,	0.1011,	03:32:46
74.8,	69.5,	7.685E-03,	0.1011,	03:33:10
68.2,	64.7,	7.685E-03,	0.1011,	03:33:34
61.5,	59.8,	7.685E-03,	0.1011,	03:34:00
54.6,	54.8,	7.685E-03,	0.1011,	03:34:30
48.4,	49.9,	7.685E-03,	0.1011,	03:35:02
42.3,	44.7,	7.685E-03,	0.1011,	03:35:40
37.0,	39.9,	7.685E-03,	0.1011,	03:36:21
32.3,	34.9,	7.685E-03,	0.1011,	03:37:11
28.2,	29.8,	7.685E-03,	0.1011,	03:38:11
24.7,	25.0,	7.685E-03,	0.1011,	03:39:24
21.4,	19.9,	7.685E-03,	0.1011,	03:41:05
18.6,	14.9,	7.685E-03,	0.1011,	03:43:34
17.6,	13.0,	7.685E-03,	0.1011,	03:45:02

LEAVING COOLING SEQUENCE

********** GAS ADDITION # 2 **********

ELAPSED TIME =03:45:05
PBOMBFINAL (PSIA) = 22.08
START FILLING SEQUENCE FOR SAMPLE FLASK
AIR BLOWER IS ON
FLASK TEMPERATURE IS COOL ENOUGH TO CONTINUE
FLASK PRESSURE IS LOW ENOUGH TO START FILLING
OPEN FLASK FILL VALVE
CURRENTLY FILLING FLASK WITH GAS
NORMAL EXIT FROM FLASK FILLING SEQUENCE
CLOSED FLASK FILL VALVE
TURNED OFF AIR BLOWER
WAITING 10 MINUTES
LEAVING SAMPLE FLASK FILLING SEQUENCE
GMS OF GAS ADDED = 0.099
START HEATING SEQUENCE
HEATING RATE = 1(C) PER 60 SEC.S

P(mmhg)	T(C)	XGAS	GMGAS	TIME
33.5,	11.7,	1.511E-02,	0.2003,	03:57:28
37.0,	15.0,	1.511E-02,	0.2003,	04:02:49
42.7,	20.0,	1.511E-02,	0.2003,	04:07:01
49.1,	25.0,	1.511E-02,	0.2003,	04:12:03
56.2,	30.0,	1.511E-02,	0.2003,	04:17:02
63.9,	35.0,	1.511E-02,	0.2003,	04:21:57
72.1,	40.1,	1.511E-02,	0.2003,	04:27:28
81.1,	45.0,	1.511E-02,	0.2003,	04:31:32
90.7,	50.0,	1.511E-02,	0.2003,	04:36:56
100.5,	55.1,	1.511E-02,	0.2003,	04:41:44
110.6,	60.0,	1.511E-02,	0.2003,	04:46:13
122.8,	65.0,	1.511E-02,	0.2003,	04:51:38
134.9,	70.0,	1.511E-02,	0.2003,	04:56:40
147.6,	75.0,	1.511E-02,	0.2003,	05:01:35
160.4,	80.1,	1.511E-02,	0.2003,	05:05:57
174.7,	85.0,	1.511E-02,	0.2003,	05:11:08
189.0,	90.0,	1.511E-02,	0.2003,	05:16:25
204.3,	95.0,	1.511E-02,	0.2003,	05:21:42

SET HOTPLATE AT CURRENT TEMPERATURE
WAITING FOR 5 MINUTES

219.5,	98.9,	1.511E-02,	0.2003,	05:30:57

LEAVING HEATING SEQUENCE
START COOLING SEQUENCE

219.3,	98.8,	1.511E-02,	0.2003,	05:31:01
209.1,	94.3,	1.511E-02,	0.2003,	05:31:31
199.4,	89.7,	1.511E-02,	0.2003,	05:31:49
188.2,	84.9,	1.511E-02,	0.2003,	05:32:07
174.9,	79.6,	1.511E-02,	0.2003,	05:32:28
162.0,	74.6,	1.511E-02,	0.2003,	05:32:49
149.3,	69.9,	1.511E-02,	0.2003,	05:33:10
135.9,	64.9,	1.511E-02,	0.2003,	05:33:34
121.5,	59.8,	1.511E-02,	0.2003,	05:34:00
107.5,	54.8,	1.511E-02,	0.2003,	05:34:30
94.9,	49.8,	1.511E-02,	0.2003,	05:35:02
82.3,	44.7,	1.511E-02,	0.2003,	05:35:40
72.7,	39.9,	1.511E-02,	0.2003,	05:36:21
63.6,	34.9,	1.511E-02,	0.2003,	05:37:11
55.5,	29.8,	1.511E-02,	0.2003,	05:38:12
48.5,	24.9,	1.511E-02,	0.2003,	05:39:27
42.2,	19.9,	1.511E-02,	0.2003,	05:41:08
36.5,	15.0,	1.511E-02,	0.2003,	05:43:40
34.4,	13.0,	1.511E-02,	0.2003,	05:45:14

LEAVING COOLING SEQUENCE

********** GAS ADDITION # 3 **********

ELAPSED TIME =05:45:17
PBOMBFINAL (PSIA) = 18.99
START BOMB FILLING SEQUENCE
OPEN BOMB FILL VALVE
CLOSE BOMB FILL VALVE
WAITING FOR 5 MINUTES
LEAVE BOMB FILLING SEQUENCE
PBOMBFINAL (PSIA) = 37.04
START FILLING SEQUENCE FOR SAMPLE FLASK
AIR BLOWER IS ON
FLASK TEMPERATURE IS COOL ENOUGH TO CONTINUE
FLASK PRESSURE IS LOW ENOUGH TO START FILLING
OPEN FLASK FILL VALVE
CURRENTLY FILLING FLASK WITH GAS
NORMAL EXIT FROM FLASK FILLING SEQUENCE
CLOSED FLASK FILL VALVE
TURNED OFF AIR BLOWER
WAITING 10 MINUTES
LEAVING SAMPLE FLASK FILLING SEQUENCE
GMS OF GAS ADDED = 0.099
START HEATING SEQUENCE
HEATING RATE = 1(C) PER 60 SEC.S

P(mmhg)	T(C)	XGAS	GMGAS	TIME
50.9,	12.6,	2.241E-02,	0.2993,	06:07:39
54.8,	15.0,	2.241E-02,	0.2993,	06:12:08
63.4,	20.1,	2.241E-02,	0.2993,	06:16:19
72.9,	25.1,	2.241E-02,	0.2993,	06:21:18
83.4,	30.0,	2.241E-02,	0.2993,	06:26:02
94.6,	35.0,	2.241E-02,	0.2993,	06:31:11
107.1,	40.1,	2.241E-02,	0.2993,	06:36:39
120.5,	45.0,	2.241E-02,	0.2993,	06:40:54
134.2,	50.0,	2.241E-02,	0.2993,	06:45:45
149.5,	55.0,	2.241E-02,	0.2993,	06:51:00
165.7,	60.0,	2.241E-02,	0.2993,	06:56:02
182.7,	65.0,	2.241E-02,	0.2993,	07:00:57
200.0,	70.0,	2.241E-02,	0.2993,	07:05:30
219.0,	75.1,	2.241E-02,	0.2993,	07:10:40
238.4,	80.0,	2.241E-02,	0.2993,	07:15:50
259.3,	85.0,	2.241E-02,	0.2993,	07:20:56
280.8,	90.0,	2.241E-02,	0.2993,	07:25:43
302.7,	95.0,	2.241E-02,	0.2993,	07:30:42

SET HOTPLATE AT CURRENT TEMPERATURE
WAITING FOR 5 MINUTES

330.3,	100.0,	2.241E-02,	0.2993,	07:40:31

LEAVING HEATING SEQUENCE
START COOLING SEQUENCE

330.0,	99.9,	2.241E-02,	0.2993,	07:40:35
312.5,	94.6,	2.241E-02,	0.2993,	07:41:07
297.6,	89.8,	2.241E-02,	0.2993,	07:41:25
278.0,	84.3,	2.241E-02,	0.2993,	07:41:46
260.9,	79.6,	2.241E-02,	0.2993,	07:42:04
241.0,	74.6,	2.241E-02,	0.2993,	07:42:25
221.9,	70.0,	2.241E-02,	0.2993,	07:42:46
199.6,	64.5,	2.241E-02,	0.2993,	07:43:13
180.7,	60.0,	2.241E-02,	0.2993,	07:43:37
160.9,	54.9,	2.241E-02,	0.2993,	07:44:06
141.0,	49.9,	2.241E-02,	0.2993,	07:44:39
122.8,	44.7,	2.241E-02,	0.2993,	07:45:17
107.1,	39.8,	2.241E-02,	0.2993,	07:45:58
93.9,	34.8,	2.241E-02,	0.2993,	07:46:47
81.9,	29.8,	2.241E-02,	0.2993,	07:47:45
71.4,	24.9,	2.241E-02,	0.2993,	07:48:57
62.0,	20.0,	2.241E-02,	0.2993,	07:50:36
53.4,	14.9,	2.241E-02,	0.2993,	07:53:02
50.3,	13.0,	2.241E-02,	0.2993,	07:54:27

LEAVING COOLING SEQUENCE

********** GAS ADDITION # 4 **********

ELAPSED TIME =07:54:30
PBOMBFINAL (PSIA) = 34.08
START FILLING SEQUENCE FOR SAMPLE FLASK
AIR BLOWER IS ON
FLASK TEMPERATURE IS COOL ENOUGH TO CONTINUE
FLASK PRESSURE IS LOW ENOUGH TO START FILLING
OPEN FLASK FILL VALVE
CURRENTLY FILLING FLASK WITH GAS
NORMAL EXIT FROM FLASK FILLING SEQUENCE
CLOSED FLASK FILL VALVE
TURNED OFF AIR BLOWER
WAITING 10 MINUTES
LEAVING SAMPLE FLASK FILLING SEQUENCE
GMS OF GAS ADDED = 0.100
START HEATING SEQUENCE
HEATING RATE = 1(C) PER 60 SEC.S

P(mmhg)	T(C)	XGAS	GMGAS	TIME
66.4,	12.3,	2.968E-02,	0.3994,	08:05:51
71.9,	15.0,	2.968E-02,	0.3994,	08:10:35
83.4,	20.0,	2.968E-02,	0.3994,	08:14:42
96.2,	25.1,	2.968E-02,	0.3994,	08:19:41
110.1,	30.0,	2.968E-02,	0.3994,	08:24:22
125.1,	35.0,	2.968E-02,	0.3994,	08:29:28
141.7,	40.0,	2.968E-02,	0.3994,	08:34:30
158.6,	45.0,	2.968E-02,	0.3994,	08:38:30
177.3,	50.0,	2.968E-02,	0.3994,	08:44:05
197.5,	55.0,	2.968E-02,	0.3994,	08:49:15
218.5,	60.1,	2.968E-02,	0.3994,	08:53:41
241.1,	65.0,	2.968E-02,	0.3994,	08:58:47
265.3,	70.0,	2.968E-02,	0.3994,	09:04:00
291.2,	75.0,	2.968E-02,	0.3994,	09:09:06
317.5,	80.1,	2.968E-02,	0.3994,	09:14:38
347.0,	85.0,	2.968E-02,	0.3994,	09:19:41
370.4,	90.0,	2.968E-02,	0.3994,	09:22:24
399.4,	95.0,	2.968E-02,	0.3994,	09:27:52

SET HOTPLATE AT CURRENT TEMPERATURE
WAITING FOR 5 MINUTES

429.8,	98.9,	2.968E-02,	0.3994,	09:38:10

LEAVING HEATING SEQUENCE
START COOLING SEQUENCE

430.0,	99.0,	2.968E-02,	0.3994,	09:38:14
411.5,	94.8,	2.968E-02,	0.3994,	09:38:46
391.1,	89.8,	2.968E-02,	0.3994,	09:39:07
367.3,	84.5,	2.968E-02,	0.3994,	09:39:28
342.8,	79.4,	2.968E-02,	0.3994,	09:39:49
317.4,	74.6,	2.968E-02,	0.3994,	09:40:10
293.4,	70.0,	2.968E-02,	0.3994,	09:40:31
265.2,	64.6,	2.968E-02,	0.3994,	09:40:58
238.3,	59.7,	2.968E-02,	0.3994,	09:41:24
211.5,	54.7,	2.968E-02,	0.3994,	09:41:54
186.9,	49.7,	2.968E-02,	0.3994,	09:42:26
163.8,	44.9,	2.968E-02,	0.3994,	09:43:01
142.6,	39.7,	2.968E-02,	0.3994,	09:43:45
125.6,	35.0,	2.968E-02,	0.3994,	09:44:32
109.0,	29.8,	2.968E-02,	0.3994,	09:45:33
95.1,	24.9,	2.968E-02,	0.3994,	09:46:45
82.4,	19.9,	2.968E-02,	0.3994,	09:48:23
71.1,	15.0,	2.968E-02,	0.3994,	09:50:47
67.0,	13.0,	2.968E-02,	0.3994,	09:52:09

LEAVING COOLING SEQUENCE

********** GAS ADDITION # 5 **********

ELAPSED TIME =09:52:12
PBOMBFINAL (PSIA) = 31.10
START FILLING SEQUENCE FOR SAMPLE FLASK
AIR BLOWER IS ON
FLASK TEMPERATURE IS COOL ENOUGH TO CONTINUE
FLASK PRESSURE IS LOW ENOUGH TO START FILLING
OPEN FLASK FILL VALVE
CURRENTLY FILLING FLASK WITH GAS
NORMAL EXIT FROM FLASK FILLING SEQUENCE
CLOSED FLASK FILL VALVE
TURNED OFF AIR BLOWER
WAITING 10 MINUTES
LEAVING SAMPLE FLASK FILLING SEQUENCE
GMS OF GAS ADDED = 0.100
START HEATING SEQUENCE
HEATING RATE = 1(C) PER 60 SEC.S

P(mmhg)	T(C)	XGAS	GMGAS	TIME
82.6,	12.2,	3.681E-02,	0.4990,	10:03:39
90.0,	15.1,	3.681E-02,	0.4990,	10:08:08
104.3,	20.0,	3.681E-02,	0.4990,	10:12:19
120.1,	25.0,	3.681E-02,	0.4990,	10:17:06
137.3,	30.0,	3.681E-02,	0.4990,	10:22:12
156.3,	35.1,	3.681E-02,	0.4990,	10:27:00
176.6,	40.0,	3.681E-02,	0.4990,	10:32:10
198.9,	45.0,	3.681E-02,	0.4990,	10:37:30
222.4,	50.0,	3.681E-02,	0.4990,	10:42:22
247.0,	55.0,	3.681E-02,	0.4990,	10:46:56
273.8,	60.0,	3.681E-02,	0.4990,	10:51:54
302.1,	65.1,	3.681E-02,	0.4990,	10:56:53
329.0,	70.0,	3.681E-02,	0.4990,	11:00:42
361.4,	75.0,	3.681E-02,	0.4990,	11:06:17
393.6,	80.1,	3.681E-02,	0.4990,	11:11:08
428.4,	85.1,	3.681E-02,	0.4990,	11:16:14
463.6,	90.1,	3.681E-02,	0.4990,	11:21:17
499.5,	95.1,	3.681E-02,	0.4990,	11:26:04

SET HOTPLATE AT CURRENT TEMPERATURE
WAITING FOR 5 MINUTES

557.4,	101.3,	3.681E-02,	0.4990,	11:36:26

LEAVING HEATING SEQUENCE
START COOLING SEQUENCE

557.0,	101.2,	3.681E-02,	0.4990,	11:36:30
519.6,	94.3,	3.681E-02,	0.4990,	11:37:08
494.2,	89.5,	3.681E-02,	0.4990,	11:37:26
464.0,	84.6,	3.681E-02,	0.4990,	11:37:44
431.6,	79.3,	3.681E-02,	0.4990,	11:38:05
402.2,	75.0,	3.681E-02,	0.4990,	11:38:23
366.4,	69.6,	3.681E-02,	0.4990,	11:38:47
333.0,	64.7,	3.681E-02,	0.4990,	11:39:11
298.4,	59.7,	3.681E-02,	0.4990,	11:39:38
265.8,	54.6,	3.681E-02,	0.4990,	11:40:07
234.5,	49.6,	3.681E-02,	0.4990,	11:40:40
206.7,	44.8,	3.681E-02,	0.4990,	11:41:15
181.3,	39.9,	3.681E-02,	0.4990,	11:41:56
157.4,	34.9,	3.681E-02,	0.4990,	11:42:45
137.0,	29.9,	3.681E-02,	0.4990,	11:43:43
119.4,	25.0,	3.681E-02,	0.4990,	11:44:56
103.5,	19.9,	3.681E-02,	0.4990,	11:46:34
89.4,	15.0,	3.681E-02,	0.4990,	11:48:58
84.1,	12.9,	3.681E-02,	0.4990,	11:50:25

LEAVING COOLING SEQUENCE

********** GAS ADDITION # 6 **********

ELAPSED TIME =11:50:28
PBOMBFINAL (PSIA) = 28.13
START FILLING SEQUENCE FOR SAMPLE FLASK
AIR BLOWER IS ON
FLASK TEMPERATURE IS COOL ENOUGH TO CONTINUE
FLASK PRESSURE IS LOW ENOUGH TO START FILLING
OPEN FLASK FILL VALVE
CURRENTLY FILLING FLASK WITH GAS
NORMAL EXIT FROM FLASK FILLING SEQUENCE
CLOSED FLASK FILL VALVE
TURNED OFF AIR BLOWER
WAITING 10 MINUTES
LEAVING SAMPLE FLASK FILLING SEQUENCE
GMS OF GAS ADDED = 0.102
START HEATING SEQUENCE
HEATING RATE = 1(C) PER 60 SEC.S

P(mmhg)	T(C)	XGAS	GMGAS	TIME
99.7,	12.1,	4.398E-02,	0.6007,	12:02:12
108.7,	15.0,	4.398E-02,	0.6007,	12:06:41
125.9,	20.0,	4.398E-02,	0.6007,	12:10:52
144.6,	25.0,	4.398E-02,	0.6007,	12:15:36
165.6,	30.1,	4.398E-02,	0.6007,	12:20:43
187.9,	35.1,	4.398E-02,	0.6007,	12:25:30
212.6,	40.1,	4.398E-02,	0.6007,	12:30:48
238.9,	45.0,	4.398E-02,	0.6007,	12:35:43
267.4,	50.0,	4.398E-02,	0.6007,	12:40:52
295.8,	55.0,	4.398E-02,	0.6007,	12:44:48
328.9,	60.1,	4.398E-02,	0.6007,	12:50:39
362.7,	65.0,	4.398E-02,	0.6007,	12:55:26
398.0,	70.0,	4.398E-02,	0.6007,	13:00:21
433.2,	75.0,	4.398E-02,	0.6007,	13:04:17
472.3,	80.0,	4.398E-02,	0.6007,	13:09:38
515.0,	85.1,	4.398E-02,	0.6007,	13:15:17
558.1,	90.1,	4.398E-02,	0.6007,	13:20:10
601.3,	95.1,	4.398E-02,	0.6007,	13:24:57

SET HOTPLATE AT CURRENT TEMPERATURE
WAITING FOR 5 MINUTES

654.6,	99.6,	4.398E-02,	0.6007,	13:34:16

LEAVING HEATING SEQUENCE
START COOLING SEQUENCE

654.0,	99.6,	4.398E-02,	0.6007,	13:34:21
623.8,	95.0,	4.398E-02,	0.6007,	13:34:50
590.7,	89.5,	4.398E-02,	0.6007,	13:35:11
556.3,	84.8,	4.398E-02,	0.6007,	13:35:29
516.4,	79.5,	4.398E-02,	0.6007,	13:35:50
479.2,	74.6,	4.398E-02,	0.6007,	13:36:11
441.5,	69.9,	4.398E-02,	0.6007,	13:36:32
398.1,	64.4,	4.398E-02,	0.6007,	13:36:58
361.3,	60.0,	4.398E-02,	0.6007,	13:37:22
320.8,	54.9,	4.398E-02,	0.6007,	13:37:52
283.5,	49.9,	4.398E-02,	0.6007,	13:38:24
246.1,	44.7,	4.398E-02,	0.6007,	13:39:02
215.6,	39.8,	4.398E-02,	0.6007,	13:39:43
188.2,	34.8,	4.398E-02,	0.6007,	13:40:33
164.4,	29.9,	4.398E-02,	0.6007,	13:41:31
143.7,	25.0,	4.398E-02,	0.6007,	13:42:43
124.7,	20.0,	4.398E-02,	0.6007,	13:44:21
107.6,	14.9,	4.398E-02,	0.6007,	13:46:50
101.1,	12.9,	4.398E-02,	0.6007,	13:48:18

LEAVING COOLING SEQUENCE

********** GAS ADDITION # 7 **********

ELAPSED TIME =13:48:21
PBOMBFINAL (PSIA) = 25.18
START FILLING SEQUENCE FOR SAMPLE FLASK
AIR BLOWER IS ON
FLASK TEMPERATURE IS COOL ENOUGH TO CONTINUE
FLASK PRESSURE IS LOW ENOUGH TO START FILLING
OPEN FLASK FILL VALVE
CURRENTLY FILLING FLASK WITH GAS
NORMAL EXIT FROM FLASK FILLING SEQUENCE
CLOSED FLASK FILL VALVE
TURNED OFF AIR BLOWER
WAITING 10 MINUTES
LEAVING SAMPLE FLASK FILLING SEQUENCE
GMS OF GAS ADDED = 0.100
START HEATING SEQUENCE
HEATING RATE = 1(C) PER 60 SEC.S

P(mmhg)	T(C)	XGAS	GMGAS	TIME
115.0,	11.9,	5.095E-02,	0.7011,	14:00:19
126.5,	15.1,	5.095E-02,	0.7011,	14:04:49
146.4,	20.0,	5.095E-02,	0.7011,	14:09:10
168.5,	25.0,	5.095E-02,	0.7011,	14:13:58
192.6,	30.0,	5.095E-02,	0.7011,	14:18:49
218.7,	35.0,	5.095E-02,	0.7011,	14:23:59
247.0,	40.0,	5.095E-02,	0.7011,	14:28:47
277.8,	45.0,	5.095E-02,	0.7011,	14:34:00
310.8,	50.0,	5.095E-02,	0.7011,	14:38:55
345.9,	55.0,	5.095E-02,	0.7011,	14:43:50
381.6,	60.0,	5.095E-02,	0.7011,	14:48:28
420.2,	65.0,	5.095E-02,	0.7011,	14:53:23
461.8,	70.1,	5.095E-02,	0.7011,	14:58:03
506.1,	75.0,	5.095E-02,	0.7011,	15:03:24
552.9,	80.0,	5.095E-02,	0.7011,	15:08:34
600.3,	85.0,	5.095E-02,	0.7011,	15:13:47
647.8,	90.1,	5.095E-02,	0.7011,	15:18:02
700.5,	95.0,	5.095E-02,	0.7011,	15:23:26
SET HOTPLATE AT CURRENT TEMPERATURE				
WAITING FOR 5 MINUTES				
751.9,	98.8,	5.095E-02,	0.7011,	15:33:37
LEAVING HEATING SEQUENCE				
START COOLING SEQUENCE				
751.4,	98.8,	5.095E-02,	0.7011,	15:33:41
718.1,	94.5,	5.095E-02,	0.7011,	15:34:11
685.6,	89.9,	5.095E-02,	0.7011,	15:34:29
642.2,	84.6,	5.095E-02,	0.7011,	15:34:50
598.5,	79.3,	5.095E-02,	0.7011,	15:35:10
554.0,	74.4,	5.095E-02,	0.7011,	15:35:31
511.3,	69.8,	5.095E-02,	0.7011,	15:35:52
464.8,	64.9,	5.095E-02,	0.7011,	15:36:16
417.8,	59.9,	5.095E-02,	0.7011,	15:36:43
371.3,	54.8,	5.095E-02,	0.7011,	15:37:12
326.5,	49.8,	5.095E-02,	0.7011,	15:37:45
286.4,	44.6,	5.095E-02,	0.7011,	15:38:23
250.9,	39.8,	5.095E-02,	0.7011,	15:39:04
218.5,	34.8,	5.095E-02,	0.7011,	15:39:53
191.2,	29.9,	5.095E-02,	0.7011,	15:40:51
167.0,	24.9,	5.095E-02,	0.7011,	15:42:03
145.1,	19.9,	5.095E-02,	0.7011,	15:43:41
125.3,	14.9,	5.095E-02,	0.7011,	15:46:05
118.0,	12.9,	5.095E-02,	0.7011,	15:47:30
LEAVING COOLING SEQUENCE				

********** GAS ADDITION # 8 **********

ELAPSED TIME =15:47:33
PBOMBFINAL (PSIA) = 22.12
START FILLING SEQUENCE FOR SAMPLE FLASK
AIR BLOWER IS ON
FLASK TEMPERATURE IS COOL ENOUGH TO CONTINUE
FLASK PRESSURE IS LOW ENOUGH TO START FILLING
OPEN FLASK FILL VALVE
CURRENTLY FILLING FLASK WITH GAS
NORMAL EXIT FROM FLASK FILLING SEQUENCE
CLOSED FLASK FILL VALVE
TURNED OFF AIR BLOWER
WAITING 10 MINUTES
LEAVING SAMPLE FLASK FILLING SEQUENCE
GMS OF GAS ADDED = 0.102
START HEATING SEQUENCE
HEATING RATE = 1(C) PER 60 SEC.S

P(mmhg)	T(C)	XGAS	GMGAS	TIME
130.8,	11.6,	5.791E-02,	0.8026,	15:59:58
144.6,	15.0,	5.791E-02,	0.8026,	16:05:22
167.7,	20.0,	5.791E-02,	0.8026,	16:09:52
193.0,	25.1,	5.791E-02,	0.8026,	16:14:28
220.7,	30.0,	5.791E-02,	0.8026,	16:19:43
250.5,	35.1,	5.791E-02,	0.8026,	16:23:53
282.3,	40.0,	5.791E-02,	0.8026,	16:29:22
317.7,	45.0,	5.791E-02,	0.8026,	16:34:39
353.9,	50.0,	5.791E-02,	0.8026,	16:39:41
396.2,	55.0,	5.791E-02,	0.8026,	16:44:51
437.3,	60.0,	5.791E-02,	0.8026,	16:49:09
482.1,	65.0,	5.791E-02,	0.8026,	16:54:08
530.3,	70.0,	5.791E-02,	0.8026,	16:59:10
581.6,	75.0,	5.791E-02,	0.8026,	17:04:20
632.7,	80.0,	5.791E-02,	0.8026,	17:08:57
687.1,	85.0,	5.791E-02,	0.8026,	17:13:55
742.3,	90.0,	5.791E-02,	0.8026,	17:18:44
SET HOTPLATE AT CURRENT TEMPERATURE				
WAITING FOR 5 MINUTES				
795.0,	93.5,	5.791E-02,	0.8026,	17:28:29
LEAVING HEATING SEQUENCE				
START COOLING SEQUENCE				
795.0,	93.5,	5.791E-02,	0.8026,	17:28:32
763.3,	89.8,	5.791E-02,	0.8026,	17:29:02
724.7,	85.0,	5.791E-02,	0.8026,	17:29:23
680.6,	80.0,	5.791E-02,	0.8026,	17:29:44
628.2,	74.5,	5.791E-02,	0.8026,	17:30:07
581.4,	69.9,	5.791E-02,	0.8026,	17:30:29
526.2,	64.5,	5.791E-02,	0.8026,	17:30:55
475.3,	59.6,	5.791E-02,	0.8026,	17:31:22
423.6,	54.6,	5.791E-02,	0.8026,	17:31:51
374.6,	49.7,	5.791E-02,	0.8026,	17:32:24
331.0,	44.9,	5.791E-02,	0.8026,	17:32:59
286.2,	39.7,	5.791E-02,	0.8026,	17:33:43
250.0,	34.8,	5.791E-02,	0.8026,	17:34:32
219.7,	29.9,	5.791E-02,	0.8026,	17:35:30
191.6,	24.9,	5.791E-02,	0.8026,	17:36:45
166.5,	19.9,	5.791E-02,	0.8026,	17:38:23
144.0,	14.9,	5.791E-02,	0.8026,	17:40:53
135.7,	13.0,	5.791E-02,	0.8026,	17:42:21
LEAVING COOLING SEQUENCE				

********** GAS ADDITION # 9 **********

ELAPSED TIME =17:42:24
PBOMBFINAL (PSIA) = 19.11
START BOMB FILLING SEQUENCE
OPEN BOMB FILL VALVE
CLOSE BOMB FILL VALVE
WAITING FOR 5 MINUTES
LEAVE BOMB FILLING SEQUENCE
PBOMBFINAL (PSIA) = 37.03
START FILLING SEQUENCE FOR SAMPLE FLASK
AIR BLOWER IS ON
FLASK TEMPERATURE IS COOL ENOUGH TO CONTINUE
FLASK PRESSURE IS LOW ENOUGH TO START FILLING
OPEN FLASK FILL VALVE
CURRENTLY FILLING FLASK WITH GAS
NORMAL EXIT FROM FLASK FILLING SEQUENCE
CLOSED FLASK FILL VALVE
TURNED OFF AIR BLOWER
WAITING 10 MINUTES
LEAVING SAMPLE FLASK FILLING SEQUENCE
GMS OF GAS ADDED = 0.099
START HEATING SEQUENCE
HEATING RATE = 1(C) PER 60 SEC.S

P(mmhg)	T(C)	XGAS	GMGAS	TIME
151.9,	12.7,	6.461E-02,	0.9020,	18:04:47
162.8,	15.0,	6.461E-02,	0.9020,	18:09:16
188.6,	20.0,	6.461E-02,	0.9020,	18:13:30
217.0,	25.0,	6.461E-02,	0.9020,	18:18:18
247.8,	30.1,	6.461E-02,	0.9020,	18:23:17
280.6,	35.0,	6.461E-02,	0.9020,	18:28:01
317.1,	40.1,	6.461E-02,	0.9020,	18:33:14
356.2,	45.0,	6.461E-02,	0.9020,	18:38:20
399.2,	50.0,	6.461E-02,	0.9020,	18:43:30
444.4,	55.0,	6.461E-02,	0.9020,	18:48:14
490.5,	60.1,	6.461E-02,	0.9020,	18:52:50
541.3,	65.0,	6.461E-02,	0.9020,	18:58:00
593.6,	70.0,	6.461E-02,	0.9020,	19:02:52
649.3,	75.0,	6.461E-02,	0.9020,	19:07:29
709.1,	80.0,	6.461E-02,	0.9020,	19:12:42
770.9,	85.0,	6.461E-02,	0.9020,	19:17:48

SET HOTPLATE AT CURRENT TEMPERATURE
WAITING FOR 5 MINUTES

802.4,	86.7,	6.461E-02,	0.9020,	19:25:06

LEAVING HEATING SEQUENCE
START COOLING SEQUENCE

802.1,	86.7,	6.461E-02,	0.9020,	19:25:10
783.5,	84.8,	6.461E-02,	0.9020,	19:25:31
743.0,	80.0,	6.461E-02,	0.9020,	19:25:55
694.5,	74.7,	6.461E-02,	0.9020,	19:26:19
642.0,	69.6,	6.461E-02,	0.9020,	19:26:43
590.6,	64.8,	6.461E-02,	0.9020,	19:27:06
534.8,	59.9,	6.461E-02,	0.9020,	19:27:33
477.4,	54.9,	6.461E-02,	0.9020,	19:28:03
420.9,	49.9,	6.461E-02,	0.9020,	19:28:35
368.5,	44.8,	6.461E-02,	0.9020,	19:29:13
325.2,	39.9,	6.461E-02,	0.9020,	19:29:54
282.4,	34.9,	6.461E-02,	0.9020,	19:30:43
247.1,	30.0,	6.461E-02,	0.9020,	19:31:41
214.9,	24.9,	6.461E-02,	0.9020,	19:32:57
186.8,	19.9,	6.461E-02,	0.9020,	19:34:35
161.7,	15.0,	6.461E-02,	0.9020,	19:37:01
152.3,	12.9,	6.461E-02,	0.9020,	19:38:29

LEAVING COOLING SEQUENCE

********** GAS ADDITION # 10 **********

ELAPSED TIME =19:38:32
PBOMBFINAL (PSIA) = 34.09
START FILLING SEQUENCE FOR SAMPLE FLASK
AIR BLOWER IS ON
FLASK TEMPERATURE IS COOL ENOUGH TO CONTINUE
FLASK PRESSURE IS LOW ENOUGH TO START FILLING
OPEN FLASK FILL VALVE
CURRENTLY FILLING FLASK WITH GAS
NORMAL EXIT FROM FLASK FILLING SEQUENCE
CLOSED FLASK FILL VALVE
TURNED OFF AIR BLOWER
WAITING 10 MINUTES
LEAVING SAMPLE FLASK FILLING SEQUENCE
GMS OF GAS ADDED = 0.098
START HEATING SEQUENCE
HEATING RATE = 1(C) PER 60 SEC.S

P(mmhg)	T(C)	XGAS	GMGAS	TIME
168.0,	12.5,	7.116E-02,	1.0003,	19:49:49
181.2,	15.0,	7.116E-02,	1.0003,	19:54:22
209.4,	20.0,	7.116E-02,	1.0003,	19:58:29
240.6,	25.0,	7.116E-02,	1.0003,	20:03:27
275.0,	30.0,	7.116E-02,	1.0003,	20:08:15
311.8,	35.0,	7.116E-02,	1.0003,	20:13:06
352.4,	40.0,	7.116E-02,	1.0003,	20:18:12
394.1,	45.0,	7.116E-02,	1.0003,	20:22:42
441.3,	50.0,	7.116E-02,	1.0003,	20:28:18
492.3,	55.0,	7.116E-02,	1.0003,	20:33:24
547.1,	60.0,	7.116E-02,	1.0003,	20:38:41
602.2,	65.0,	7.116E-02,	1.0003,	20:42:26
660.4,	70.0,	7.116E-02,	1.0003,	20:47:51
722.3,	75.0,	7.116E-02,	1.0003,	20:52:49
786.0,	80.1,	7.116E-02,	1.0003,	20:57:41

SET HOTPLATE AT CURRENT TEMPERATURE
WAITING FOR 5 MINUTES

800.7,	80.1,	7.116E-02,	1.0003,	21:03:33

LEAVING HEATING SEQUENCE
START COOLING SEQUENCE

800.2,	80.1,	7.116E-02,	1.0003,	21:03:37
796.9,	79.9,	7.116E-02,	1.0003,	21:03:44
751.2,	74.8,	7.116E-02,	1.0003,	21:04:16
703.4,	70.0,	7.116E-02,	1.0003,	21:04:40
644.5,	64.6,	7.116E-02,	1.0003,	21:05:07
587.5,	59.7,	7.116E-02,	1.0003,	21:05:33
526.4,	54.7,	7.116E-02,	1.0003,	21:06:03
466.5,	49.7,	7.116E-02,	1.0003,	21:06:35
410.9,	44.9,	7.116E-02,	1.0003,	21:07:10
357.3,	39.7,	7.116E-02,	1.0003,	21:07:54
313.8,	35.0,	7.116E-02,	1.0003,	21:08:41
272.5,	29.8,	7.116E-02,	1.0003,	21:09:42
238.6,	24.9,	7.116E-02,	1.0003,	21:10:54
207.4,	19.9,	7.116E-02,	1.0003,	21:12:32
179.6,	15.0,	7.116E-02,	1.0003,	21:14:59
169.3,	13.0,	7.116E-02,	1.0003,	21:16:27

LEAVING COOLING SEQUENCE
ABORT RUN

Appendix B.7

Output Data File (Sample)

```
'B:RUN28.DAT','08-02-1985'
'TETRAGLYME',222.28,85.17
'H2S',34.08,.1
   0.3,      15.0,   0.000E+00,   0.0000
   0.4,      20.0,   0.000E+00,   0.0000
   0.4,      25.0,   0.000E+00,   0.0000
   0.4,      30.0,   0.000E+00,   0.0000
   0.4,      35.0,   0.000E+00,   0.0000
   0.5,      40.0,   0.000E+00,   0.0000
   0.6,      45.0,   0.000E+00,   0.0000
   0.7,      50.0,   0.000E+00,   0.0000
   0.7,      55.1,   0.000E+00,   0.0000
   0.8,      60.0,   0.000E+00,   0.0000
   0.9,      65.0,   0.000E+00,   0.0000
   1.2,      70.0,   0.000E+00,   0.0000
   1.4,      75.1,   0.000E+00,   0.0000
   1.6,      80.0,   0.000E+00,   0.0000
   2.0,      85.0,   0.000E+00,   0.0000
   2.2,      90.1,   0.000E+00,   0.0000
   2.7,      95.1,   0.000E+00,   0.0000
   3.1,      99.0,   0.000E+00,   0.0000
  18.5,      15.1,   7.685E-03,   0.1011
  21.4,      20.0,   7.685E-03,   0.1011
  24.5,      25.1,   7.685E-03,   0.1011
  28.1,      30.1,   7.685E-03,   0.1011
  32.0,      35.0,   7.685E-03,   0.1011
  36.1,      40.0,   7.685E-03,   0.1011
  40.6,      45.1,   7.685E-03,   0.1011
  45.4,      50.0,   7.685E-03,   0.1011
  50.5,      55.0,   7.685E-03,   0.1011
  56.1,      60.0,   7.685E-03,   0.1011
  62.0,      65.0,   7.685E-03,   0.1011
  67.9,      70.0,   7.685E-03,   0.1011
  74.4,      75.0,   7.685E-03,   0.1011
  81.3,      80.0,   7.685E-03,   0.1011
  88.8,      85.1,   7.685E-03,   0.1011
  96.1,      90.1,   7.685E-03,   0.1011
 103.6,      95.0,   7.685E-03,   0.1011
 110.5,      98.8,   7.685E-03,   0.1011
  37.0,      15.0,   1.511E-02,   0.2003
  42.7,      20.0,   1.511E-02,   0.2003
  49.1,      25.0,   1.511E-02,   0.2003
  56.2,      30.0,   1.511E-02,   0.2003
  63.9,      35.0,   1.511E-02,   0.2003
  72.1,      40.1,   1.511E-02,   0.2003
  81.1,      45.0,   1.511E-02,   0.2003
  90.7,      50.0,   1.511E-02,   0.2003
 100.5,      55.1,   1.511E-02,   0.2003
 110.6,      60.0,   1.511E-02,   0.2003
```

122.8,	65.0,	1.511E-02,	0.2003
134.9,	70.0,	1.511E-02,	0.2003
147.6,	75.0,	1.511E-02,	0.2003
160.4,	80.1,	1.511E-02,	0.2003
174.7,	85.0,	1.511E-02,	0.2003
189.0,	90.0,	1.511E-02,	0.2003
204.3,	95.0,	1.511E-02,	0.2003
219.5,	98.9,	1.511E-02,	0.2003
54.8,	15.0,	2.241E-02,	0.2993
63.4,	20.1,	2.241E-02,	0.2993
72.9,	25.1,	2.241E-02,	0.2993
83.4,	30.0,	2.241E-02,	0.2993
94.6,	35.0,	2.241E-02,	0.2993
107.1,	40.1,	2.241E-02,	0.2993
120.5,	45.0,	2.241E-02,	0.2993
134.2,	50.0,	2.241E-02,	0.2993
149.5,	55.0,	2.241E-02,	0.2993
165.7,	60.0,	2.241E-02,	0.2993
182.7,	65.0,	2.241E-02,	0.2993
200.0,	70.0,	2.241E-02,	0.2993
219.0,	75.1,	2.241E-02,	0.2993
238.4,	80.0,	2.241E-02,	0.2993
259.3,	85.0,	2.241E-02,	0.2993
280.8,	90.0,	2.241E-02,	0.2993
302.7,	95.0,	2.241E-02,	0.2993
330.3,	100.0,	2.241E-02,	0.2993
71.9,	15.0,	2.968E-02,	0.3994
83.4,	20.0,	2.968E-02,	0.3994
96.2,	25.1,	2.968E-02,	0.3994
110.1,	30.0,	2.968E-02,	0.3994
125.1,	35.0,	2.968E-02,	0.3994
141.7,	40.0,	2.968E-02,	0.3994
158.6,	45.0,	2.968E-02,	0.3994
177.3,	50.0,	2.968E-02,	0.3994
197.5,	55.0,	2.968E-02,	0.3994
218.5,	60.1,	2.968E-02,	0.3994
241.1,	65.0,	2.968E-02,	0.3994
265.3,	70.0,	2.968E-02,	0.3994
291.2,	75.0,	2.968E-02,	0.3994
317.5,	80.1,	2.968E-02,	0.3994
347.0,	85.0,	2.968E-02,	0.3994
370.4,	90.0,	2.968E-02,	0.3994
399.4,	95.0,	2.968E-02,	0.3994
429.8,	98.9,	2.968E-02,	0.3994
90.0,	15.1,	3.681E-02,	0.4990
104.3,	20.0,	3.681E-02,	0.4990
120.1,	25.0,	3.681E-02,	0.4990
137.3,	30.0,	3.681E-02,	0.4990
156.3,	35.1,	3.681E-02,	0.4990
176.6,	40.0,	3.681E-02,	0.4990
198.9,	45.0,	3.681E-02,	0.4990
222.4,	50.0,	3.681E-02,	0.4990
247.0,	55.0,	3.681E-02,	0.4990
273.8,	60.0,	3.681E-02,	0.4990
302.1,	65.1,	3.681E-02,	0.4990

329.0,	70.0,	3.681E-02,	0.4990
361.4,	75.0,	3.681E-02,	0.4990
393.6,	80.1,	3.681E-02,	0.4990
428.4,	85.1,	3.681E-02,	0.4990
463.6,	90.1,	3.681E-02,	0.4990
499.5,	95.1,	3.681E-02,	0.4990
557.4,	101.3,	3.681E-02,	0.4990
108.7,	15.0,	4.398E-02,	0.6007
125.9,	20.0,	4.398E-02,	0.6007
144.6,	25.0,	4.398E-02,	0.6007
165.6,	30.1,	4.398E-02,	0.6007
187.9,	35.1,	4.398E-02,	0.6007
212.6,	40.1,	4.398E-02,	0.6007
238.9,	45.0,	4.398E-02,	0.6007
267.4,	50.0,	4.398E-02,	0.6007
295.8,	55.0,	4.398E-02,	0.6007
328.9,	60.1,	4.398E-02,	0.6007
362.7,	65.0,	4.398E-02,	0.6007
398.0,	70.0,	4.398E-02,	0.6007
433.2,	75.0,	4.398E-02,	0.6007
472.3,	80.0,	4.398E-02,	0.6007
515.0,	85.1,	4.398E-02,	0.6007
558.1,	90.1,	4.398E-02,	0.6007
601.3,	95.1,	4.398E-02,	0.6007
654.6,	99.6,	4.398E-02,	0.6007
126.5,	15.1,	5.095E-02,	0.7011
146.4,	20.0,	5.095E-02,	0.7011
168.5,	25.0,	5.095E-02,	0.7011
192.6,	30.0,	5.095E-02,	0.7011
218.7,	35.0,	5.095E-02,	0.7011
247.0,	40.0,	5.095E-02,	0.7011
277.8,	45.0,	5.095E-02,	0.7011
310.8,	50.0,	5.095E-02,	0.7011
345.9,	55.0,	5.095E-02,	0.7011
381.6,	60.0,	5.095E-02,	0.7011
420.2,	65.0,	5.095E-02,	0.7011
461.8,	70.1,	5.095E-02,	0.7011
506.1,	75.0,	5.095E-02,	0.7011
552.9,	80.0,	5.095E-02,	0.7011
600.3,	85.0,	5.095E-02,	0.7011
647.8,	90.1,	5.095E-02,	0.7011
700.5,	95.0,	5.095E-02,	0.7011
751.9,	98.8,	5.095E-02,	0.7011
144.6,	15.0,	5.791E-02,	0.8026
167.7,	20.0,	5.791E-02,	0.8026
193.0,	25.1,	5.791E-02,	0.8026
220.7,	30.0,	5.791E-02,	0.8026
250.5,	35.1,	5.791E-02,	0.8026
282.3,	40.0,	5.791E-02,	0.8026
317.7,	45.0,	5.791E-02,	0.8026
353.9,	50.0,	5.791E-02,	0.8026
396.2,	55.0,	5.791E-02,	0.8026
437.3,	60.0,	5.791E-02,	0.8026
482.1,	65.0,	5.791E-02,	0.8026
530.3,	70.0,	5.791E-02,	0.8026

581.6,	75.0,	5.791E-02,	0.8026
632.7,	80.0,	5.791E-02,	0.8026
687.1,	85.0,	5.791E-02,	0.8026
742.3,	90.0,	5.791E-02,	0.8026
795.0,	93.5,	5.791E-02,	0.8026
162.8,	15.0,	6.461E-02,	0.9020
188.6,	20.0,	6.461E-02,	0.9020
217.0,	25.0,	6.461E-02,	0.9020
247.8,	30.1,	6.461E-02,	0.9020
280.6,	35.0,	6.461E-02,	0.9020
317.1,	40.1,	6.461E-02,	0.9020
356.2,	45.0,	6.461E-02,	0.9020
399.2,	50.0,	6.461E-02,	0.9020
444.4,	55.0,	6.461E-02,	0.9020
490.5,	60.1,	6.461E-02,	0.9020
541.3,	65.0,	6.461E-02,	0.9020
593.6,	70.0,	6.461E-02,	0.9020
649.3,	75.0,	6.461E-02,	0.9020
709.1,	80.0,	6.461E-02,	0.9020
770.9,	85.0,	6.461E-02,	0.9020
802.4,	86.7,	6.461E-02,	0.9020
181.2,	15.0,	7.116E-02,	1.0003
209.4,	20.0,	7.116E-02,	1.0003
240.6,	25.0,	7.116E-02,	1.0003
275.0,	30.0,	7.116E-02,	1.0003
311.8,	35.0,	7.116E-02,	1.0003
352.4,	40.0,	7.116E-02,	1.0003
394.1,	45.0,	7.116E-02,	1.0003
441.3,	50.0,	7.116E-02,	1.0003
492.3,	55.0,	7.116E-02,	1.0003
547.1,	60.0,	7.116E-02,	1.0003
602.2,	65.0,	7.116E-02,	1.0003
660.4,	70.0,	7.116E-02,	1.0003
722.3,	75.0,	7.116E-02,	1.0003
786.0,	80.1,	7.116E-02,	1.0003
800.7,	80.1,	7.116E-02,	1.0003
-1.0,	0.0,	0.0,	0.0

Appendix B.8

Data Regression and Correlation Program (CRUNCH.F77)

```
C ***********************************************************************
C  CRUNCH.F77 REGRESSES AND CORRELATES LIGHT GAS SOLUBILITY DATA
C  COLLECTED BY CONTROL.BAS TO FIT THE MODIFIED KRICHEVSKY-ILLINSKAYA
C  EQUATION.  THIS PROGRAM WAS WRITTEN BY STEVEN F. SCIAMANNA.
C ***********************************************************************

      IMPLICIT REAL*8 (A-H,O-Z)
      REAL*8 M
      DIMENSION PKPA(200),TK(200),GMGAS(200),XGAS(200),WGAS(200),
     1PVAPSOL(200),PGAS(200),FOX(200),XVAR(200),HENRY(200),GAMMA(200),
     2HANK(50,4)

      CHARACTER*20 FILENAME,DATE,SOLVENT,GAS
      INTEGER YES,YALL,YHANK,YREP

C  OPEN DATA FILE GENERATED BY CONTROL.BAS

      OPEN (1,FILE='PTXIN.DAT',ERR=500)
      YES=1

C  OPTION TO CREATE ALL.DAT OUTPUT DATA FILE WHICH INCLUDES INTERMEDIATE
C  VALUES FOR ALL DATA POINTS.

      WRITE (6,20)
   20 FORMAT ('  OPEN ALL.DAT? (Y=1) ')
      READ (5,*) YALL
      IF (YALL.EQ.YES) OPEN (2,FILE='ALL.DAT',ERR=500)

C  OPTION TO CREATE HANK.DAT OUTPUT DATA FILE WHICH INCLUDES HENRY'S LAW
C  VALUES AT VARIOUS TEMPERATURES.

      WRITE (6,22)
   22 FORMAT ('  OPEN HANK.DAT? (Y=1) ')
      READ (5,*) YHANK
      IF (YHANK.EQ.YES) OPEN (3,FILE='HANK.DAT',ERR=500)

C  OPTION TO CREATE REPORT.DAT OUTPUT DATA FILE WHICH INCLUDES A SUMMARY
```

```
C  OF ALL REGRESSED AND CORRELATED QUANTITIES.

      WRITE (6,24)
   24 FORMAT ('  OPEN REPORT.DAT? (Y=1) ')
      READ (5,*) YREP
      IF (YREP.EQ.YES) OPEN (4,FILE='REPORT.DAT',ERR=500)

C  OPTION TO OMIT DATA POINTS WHICH HAVE <= A SPECIFIED MASS OF GAS.

      WRITE (6,26)
   26 FORMAT('  OMIT DATA WITH <= ? GRAMS OF GAS ')
      READ (5,*) GMSOMIT

C  READ HEADER INFORMATION FROM DATA FILE

      READ (1,*) FILENAME,DATE
      READ (1,*) SOLVENT,SOLMW,GMSOL
      READ (1,*) GAS,GASMW,GMGASADD

C  INITIALIZE ALL SUMS

      SUMX=0.D0
      SUMY=0.D0
      SUMXY=0.D0
      SUMXX=0.D0
      SUMYY=0.D0
      N=0

C  ONLY READ SOLVENT VAPOR PRESSURE DATA FROM DATA FILE.

      DO 100 I=1,200
      READ (1,*) P,T,XG,GG
      IF (GG.GT.0.D0)   GOTO 150
      IF (T.LT.50.D0)   GOTO 100

C   ONLY REGRESS SOLVENT VAPOR PRESSURE DATA POINTS ABOVE 50C.
```

```
      P=P*0.13332
      T=T+273.15D0
      X=1.0D0/T
      Y=DLOG(P)
      XY=X*Y
      XX=X*X
      YY=Y*Y
      SUMX=SUMX+X
      SUMY=SUMY+Y
      SUMXY=SUMXY+XY
      SUMXX=SUMXX+XX
      SUMYY=SUMYY+YY
      N=N+1
 100  CONTINUE

 150  DENOM=N*SUMXX-(SUMX)**2
      B=(SUMY*SUMXX-SUMX*SUMXY)/DENOM
      M=(N*SUMXY-SUMX*SUMY)/DENOM
      DENOM=(SUMXX-SUMX**2/N)*(SUMYY-SUMY**2/N)
      R2=(SUMXY-SUMX*SUMY/N)**2/DENOM

C  SOLB AND SOLM ARE THE Y-INTERCEPT AND SLOPE OF CORRESPONDING TO
C  CONSTANTS IN AN ANTOINE EQUATION FOR THE SOLVENT VAPOR PRESSURE.

      SOLB=B
      SOLM=M
      SOLR2=R2

C  READ IN ALL THE DATA POINTS. CALCULATE AND STORE INTERMEDIATE VALUES
C  IN THE VARIOUS ARRAYS.

      I=1
      NOMIT=0

 200  CONTINUE

      IF (GG.LT.1.2D0*GMSOMIT) NOMIT=I
```

```
      PKPA(I)=P*0.13332D0
      TK(I)=T+273.15
      XGAS(I)=XG
      GMGAS(I)=GG
      PVAPSOL(I)=EXP(SOLM/TK(I)+SOLB)
      PGAS(I)=PKPA(I)-(1.0D0-XGAS(I))*PVAPSOL(I)
      FOX(I)=PGAS(I)/XGAS(I)
      WGAS(I)=GMGAS(I)/(GMGAS(I)+GMSOL)
      XVAR(I)=XGAS(I)*(XGAS(I)-2.0D0)/TK(I)

      I=I+1
      READ (1,*) P,T,XG,GG
      IF (P.GT.0.D0) GOTO 200

      NPTS=I-1
      NKEEP=NOMIT+1

C  SORT DATA BY ISOTHERM AND REGRESS LN(F/X) VS. XVAR AT CONSTANT
C  TEMPERATURE.  THE SLOPE IS A/R AND THE Y-INTERCEPT IS HENRYS
C  CONSTANT.  SAVE TEMPERATURE, A/R, HENRY'S CONSTANT AND CORRELATION
C  COEFFICIENT IN 'HANK' ARRAY.

C  THE DATA WAS COLLECTED AT 5 C TEMPERATURE INCREMENTS.  IN CASE THE
C  TEMPERATURE INCREMENT IS NOT AN EXACT MULTIPLE OF 5 C, THEN ROUND
C  OFF THE VALUE TO THE NEAREST MULTIPLE OF 5C.  IF DATA IS COLLECTED
C  AT SOME OTHER INCREMENT THEN THE ARGUMENT IN THE MOD STATEMENT
C  SHOULD BE CHANGED.

      TEMP=TK(NKEEP)-273.15D0
      MTEMP=INT(TEMP)
      IF(MOD(MTEMP,5).NE.0) THEN
        MTEMP=MTEMP+1
      ENDIF
      TEMP=DBLE(MTEMP)+273.15D0

      J=1
```

```
300   CONTINUE

C  INITALIZE ALL SUMS

      SUMX=0.D0
      SUMY=0.D0
      SUMXY=0.D0
      SUMXX=0.D0
      SUMYY=0.D0
      N=0

C  ONLY REGRESS DATA AT THE SAME TEMPERATURE TO FIT THE KRICHEVSKY-
C  ILLINSKAYA EQUATION.

      DO 50 I=NKEEP,NPTS

      IF (DABS(TK(I)-TEMP).GT.0.2D0) GOTO 50
      X=XVAR(I)
      Y=DLOG(FOX(I))
      XX=X*X
      XY=X*Y
      YY=Y*Y
      SUMX=SUMX+X
      SUMY=SUMY+Y
      SUMXX=SUMXX+XX
      SUMXY=SUMXY+XY
      SUMYY=SUMYY+YY
      N=N+1
   50 CONTINUE

      DENOM=N*SUMXX-(SUMX)**2
      B=(SUMY*SUMXX-SUMX*SUMXY)/DENOM
      M=(N*SUMXY-SUMX*SUMY)/DENOM
      DENOM=(SUMXX-SUMX**2/N)*(SUMYY-SUMY**2/N)
      R2=(SUMXY-SUMX*SUMY/N)**2/DENOM
```

```
C  STORE TEMPERATURE, A/R, HENRY'S LAW VALUE, AND CORRELATION
C  COEFFICIENT IN THE HANK ARRAY.

      HANK(J,1)=TEMP
      HANK(J,2)=M
      HANK(J,3)=DEXP(B)
      HANK(J,4)=R2

C  REPEAT THE PREVIOUS REGRESSION FOR THE NEXT 5C TEMPERATURE INCREMENT
C  UP TO A MAXIMUM OF 95C.  IF THE INCREMENT OR MAXIMUM TEMPERATURE IS
C  DIFFERENT THEN THESE CONSTANTS SHOULD BE CHANGED. JPTS IS THE NUMBER
C  OF TEMPERATURE POINTS.

      TEMP=TEMP+5.D0
      J=J+1
      IF (TEMP.LE.368.15D0) GOTO 300
      JPTS=J-1

C  INITIALIZE ALL SUMS

      SUMX=0.D0
      SUMY=0.D0
      SUMXX=0.D0
      SUMXY=0.D0
      SUMYY=0.D0

C  REGRESS LOG HENRY'S LAW VALUE (Y-INTERCEPT FROM BEFORE) VS. 1/T(K)

      DO 450 J=1,JPTS

      X=1.D0/HANK(J,1)
      Y=DLOG(HANK(J,3))
      XX=X*X
      XY=X*Y
      YY=Y*Y
      SUMX=SUMX+X
      SUMY=SUMY+Y
```

```
      SUMXX=SUMXX+XX
      SUMXY=SUMXY+XY
      SUMYY=SUMYY+YY
450   CONTINUE

      N=JPTS
      DENOM=N*SUMXX-SUMX**2
      B=(SUMY*SUMXX-SUMX*SUMXY)/DENOM
      M=(N*SUMXY-SUMX*SUMY)/DENOM
      DENOM=(SUMXX-SUMX**2/N)*(SUMYY-SUMY**2/N)
      R2=(SUMXY-SUMX*SUMY/N)**2/DENOM

C  HM AND HB ARE CONSTANTS FOR [LN (HENRY) = HM/TK + HB].
      HM=M
      HB=B
      HR2=R2

C  CALCULATE HENRY'S CONSTANT AND GAMMA* (UNSYMMETRICALLY NORMALIZED
C  ACTIVITY COEFFICIENT) FOR EACH DATA POINT.

      DO 550 I=1,NPTS
      HENRY(I)=DEXP(HM/TK(I)+HB)
      GAMMA(I)=FOX(I)/HENRY(I)
  550 CONTINUE

C  INITIALIZE ALL SUMS

      SUMXX=0.D0
      SUMXY=0.D0

C  REGRESS A/R OVER ALL DATA POINTS TO FIND BEST VALUE OF A/R.

      DO 600 I=NKEEP,NPTS

      X=XVAR(I)
      XX=X*X
      XY=X*DLOG(GAMMA(I))
```

```
      SUMXX=SUMXX+XX
      SUMXY=SUMXY+XY
 600  CONTINUE

      ARLS=SUMXY/SUMXX

C  DETERMINE THE STANDARD DEVIATION BETWEEN THE CALCULATED AND
C  MEASURED DATA POINTS.

      SUMERR2=0.D0

      DO 650 I=NKEEP,NPTS
      ERROR2=(1.D0-DEXP(ARLS*XVAR(I))/GAMMA(I))**2
      SUMERR2=SUMERR2+ERROR2
 650  CONTINUE

      STD=SQRT(SUMERR2/(NPTS-NOMIT-1))
      PSTD=100.D0*STD

C PSTD IS THE PERCENT STANDARD DEVIATION

C SHOULD ALL.DAT BE PRINTED OUT?

      IF (YALL.NE.YES) GOTO 460

      WRITE (2,400) FILENAME, DATE
      WRITE (2,405) SOLVENT,SOLMW,GMSOL,SOLM,SOLB,SOLR2
      WRITE (2,410) GAS,GASMW
      WRITE (2,412) NPTS,HM,HB,HR2,ARLS,STD
 400  FORMAT (1X,1H',A12,1H',',',1H',A12,1H')
 405  FORMAT (1X,1H',A12,1H',5(',',E12.5))
 410  FORMAT (1X,1H',A12,1H',',',E12.5)
 412  FORMAT (1X,I5,5(',',E12.5))

      WRITE (2,415)
 415  FORMAT(1X,1H',2X,'P(KPA)',9X,'T(K)',8X,'GMGAS',8X,'XGAS',9X,
     1 'WGAS',6X,'PVAPSOL(KPA)',3X,'PGAS(KPA)',4X,'F/X (KPA)',5X,
```

```
     2 'XVAR',9X,'HENRY',8X,'GAMMA*',1H')

      DO 700 I=1,NPTS

700   WRITE (2,420) PKPA(I),TK(I),GMGAS(I),XGAS(I),WGAS(I),PVAPSOL(I),
     1 PGAS(I),FOX(I),XVAR(I),HENRY(I),GAMMA(I)

      A=-1.D0
      B=0.D0

      WRITE (2,420) A,B,B,B,B,B,B,B,B,B,B
420   FORMAT (1X,10(E12.5,','),E12.5)

 460  CONTINUE

C  SHOULD HANK.DAT BE PRINTED OUT?

      IF (YHANK.NE.YES) GOTO 475

      WRITE (3,425)
 425  FORMAT (1X,1H',3X,'T(K)',10X,'A/R',10X,'HENRYS',8X,'R2',3X,1H')

      DO 800 I=1,JPTS
800   WRITE (3,430) (HANK(I,J), J=1,4)

 430  FORMAT (1X,3(E12.5,','),E12.5)

 475  CONTINUE

C  SHOULD REPORT.DAT BE PRINTED OUT?

      IF (YREP.NE.YES) GOTO 500

      TKHI=0.D0
      TKLO=500.D0
      PHI=0.D0
      PLO=1000.D0
```

```
      WHI=0.D0
      WLO=1.D0
      XHI=0.D0
      XLO=1.D0
      GAMHI=0.D0
      GAMLO=10.D0

      DO 1000 I=1,NPTS
      IF (TK(I).GT.TKHI) TKHI=TK(I)
      IF (TK(I).LT.TKLO) TKLO=TK(I)
      IF (PGAS(I).GT.PHI) PHI=PKPA(I)
      IF (PGAS(I).LT.PLO) PLO=PKPA(I)
      IF (WGAS(I).GT.WHI) WHI=WGAS(I)
      IF (WGAS(I).LT.WLO) WLO=WGAS(I)
      IF (XGAS(I).GT.XHI) XHI=XGAS(I)
      IF (XGAS(I).LT.XLO) XLO=XGAS(I)
      IF (GAMMA(I).GT.GAMHI) GAMHI=GAMMA(I)
      IF (GAMMA(I).LT.GAMLO) GAMLO=GAMMA(I)
 1000 CONTINUE

      WRITE (4,480)
  480 FORMAT(1X,15(H*),' LIGHT GAS SOLUBILITY REPORT ',15(H*),//)
      WRITE (4,482) FILENAME,DATE,SOLVENT,GAS
  482 FORMAT(2X,2(A12,5X),2(A12),/)
      WRITE (4,495)
  495 FORMAT (35X,'RANGE',/,'  VARIABLES',19X,'LOW',9X,'HI',/)
      WRITE (4,496) TKLO,TKHI
  496 FORMAT('  TEMPERATURE (K)',13X,F5.1,6X,F5.1)
      WRITE (4,497) PLO,PHI
  497 FORMAT('  PARTIAL PRESSURE (KPA) ',4X,F5.2,7X,F6.2)
      WRITE (4,498) WLO,WHI
  498 FORMAT('  WEIGHT FRACTION ',12X,F6.5,5X,F6.5)
      WRITE (4,499) XLO,XHI
  499 FORMAT('  MOLE FRACTION ',14X,F6.5,5X,F6.5)
      WRITE (4,502) GAMLO,GAMHI
  502 FORMAT('  GAMMA*',21X,F5.3,7X,F5.3,//)
      WRITE (4,484)
```

```
484  FORMAT('  SOLVENT VAPOR PRESSURE:  PVAP(KPA)=DEXP[MS/T(K)+BS] ')
     WRITE (4,486) SOLM,SOLB,SOLR2
486  FORMAT('  MS = ',E12.5,5X,'BS = ',E12.5,5X,'R2 = ',F5.4,/)
     WRITE (4,488)
488  FORMAT('  HENRYS LAW:  HENRY(KPA)=DEXP[MH/T(K)+BH] ')
     WRITE (4,490) HM,HB,HR2
490  FORMAT('  MH = ',E12.5,5X,'BH = ',E12.5,5X,'R2 = ',F5.4,/)
     WRITE (4,492) ARLS
492  FORMAT('  TWO-SUFFIX MARGULES CONSTANT: A/R(K) = ',E12.5,/)
     WRITE (4,494) PSTD,NPTS
494  FORMAT('  STANDARD DEVIATION (%) = ',F5.2,5X,'NPTS = ',I3,/)
     WRITE (4,504) NOMIT,GMSOMIT
504  FORMAT('  NUMBER OF DATA POINTS OMITTED =',I3,5X,/,
    1,'  DATA WITH <= ',F5.4,' GRAMS OF GAS WERE NOT CONSIDERED')

500  CLOSE (1)
     IF (YALL.EQ.YES) CLOSE (2)
     IF (YHANK.EQ.YES) CLOSE (3)
     IF (YREP.EQ.YES) CLOSE (4)
     STOP
     END
```

APPENDIX C

C.1 Simulation Flow Diagram

C.2 Operations Specifications Summary

C.3 Detailed Stream Data

C.4 Column Profiles

Appendix C.1

Simulation Flow Diagram

The **UCBSRP** flowsheet simulator described by Neumann (1986) is composed of many "operation" subroutines that simulate actual unit operations. These "operations" are "connected" together to describe an actual process. The process simulator generates detailed heat and mass balances for all the streams in the process. The process flow diagram shown in Figure 4-2 was decomposed into the Simulation Flow Diagram (SFD) outlined in the following section. There are many more "operations" and streams in the detailed SFD than are shown in Figure 4-2. The circled stream numbers shown in the SFD do not correspond to those shown in Figure 4-2. The "operations" shown in the SFD are numbered in the order they are calculated. Some of these "operations" are fictitious and but are included to improve the stability of the calculation. An example of such an "operation" is Unit #8, the SO_2 specification. This specification insures a constant flow of sulfur dioxide to the rest of the simulation even if the SO_2 absorber fails to produce the required amount of SO_2 solution. This "operation" has no effect at convergence of a correctly specified simulation. Alternatively, Unit #23 which specifies the molar flow of H_2S, is necessary for convergence. This "operation" is analogous to a H_2S controller in an actual process. In Figure 4-2, there are four points where chemical reaction occurs; they are: the primary absorber, secondary absorber, primary reactor and recycle reactor. If the H_2S composition or flow is not fixed at some point in the simulation (or process), the process simulation is under constrained.

FIGURE C-1

Simulation Flow Diagram

LEAN SOLVENT FLOW SPLITTING

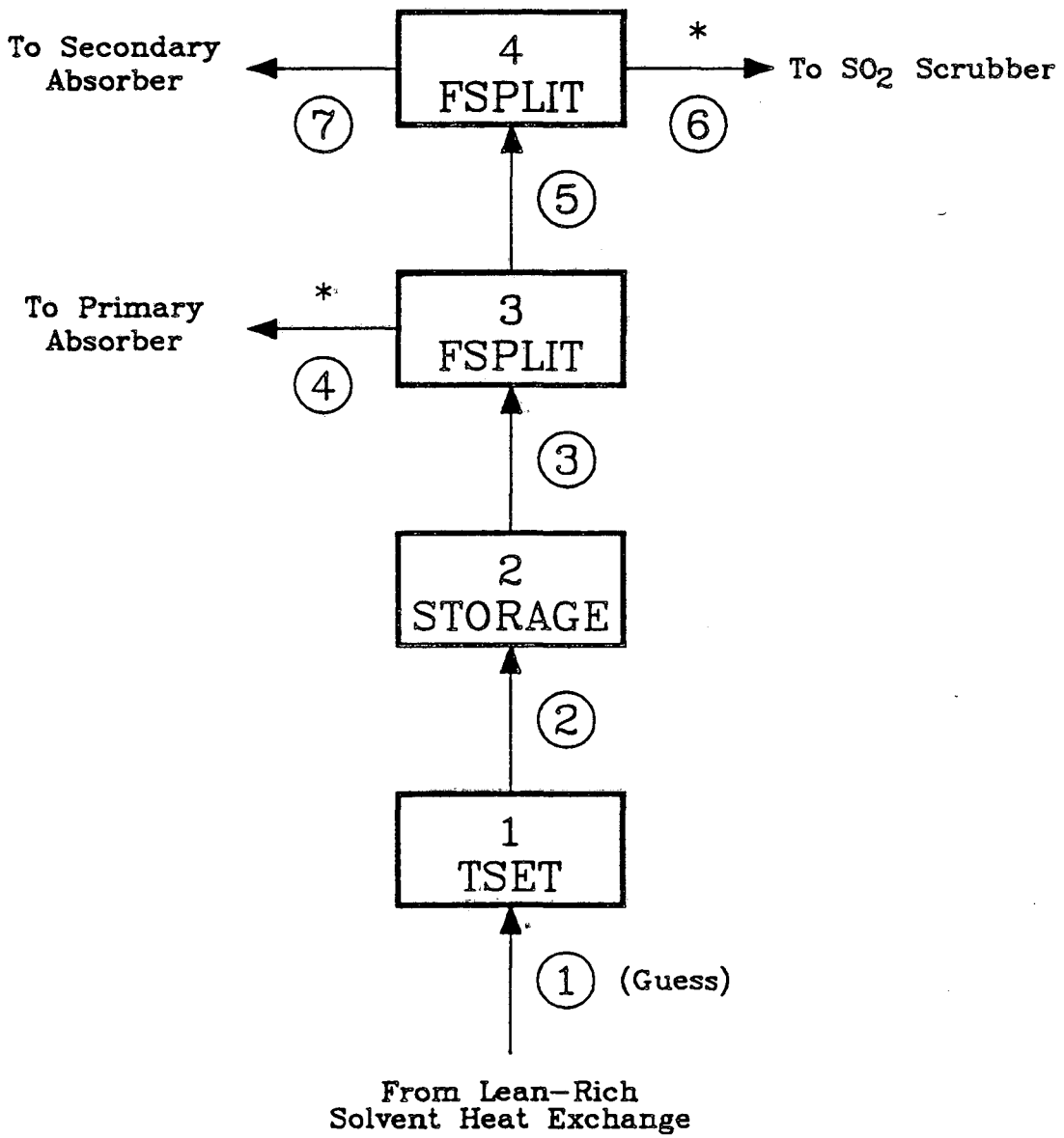

FIGURE C-2

Simulation Flow Diagram

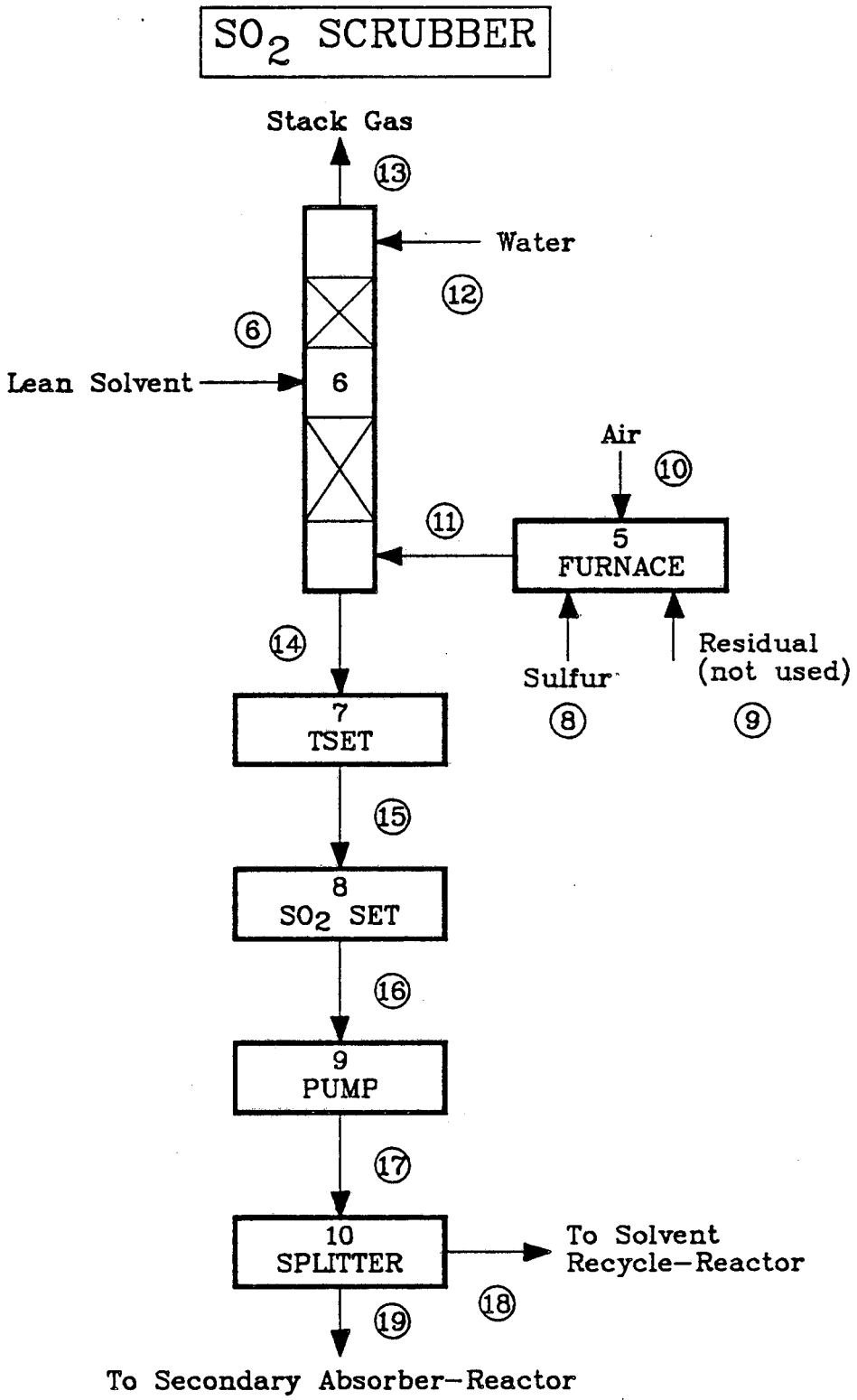

FIGURE C-3

Simulation Flow Diagram

SOUR GAS-LIQUID SEPARATION

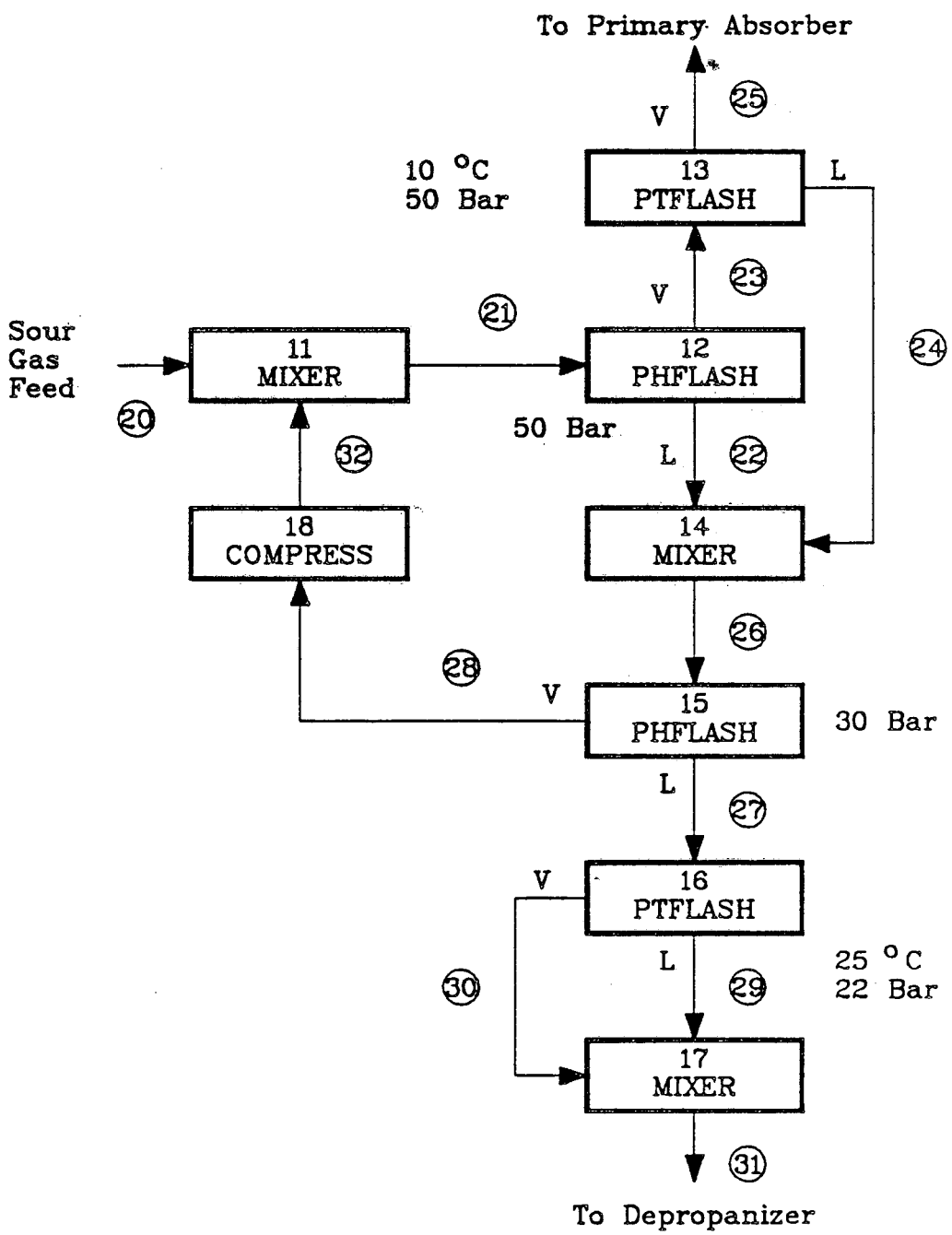

FIGURE C-4

Simulation Flow Diagram

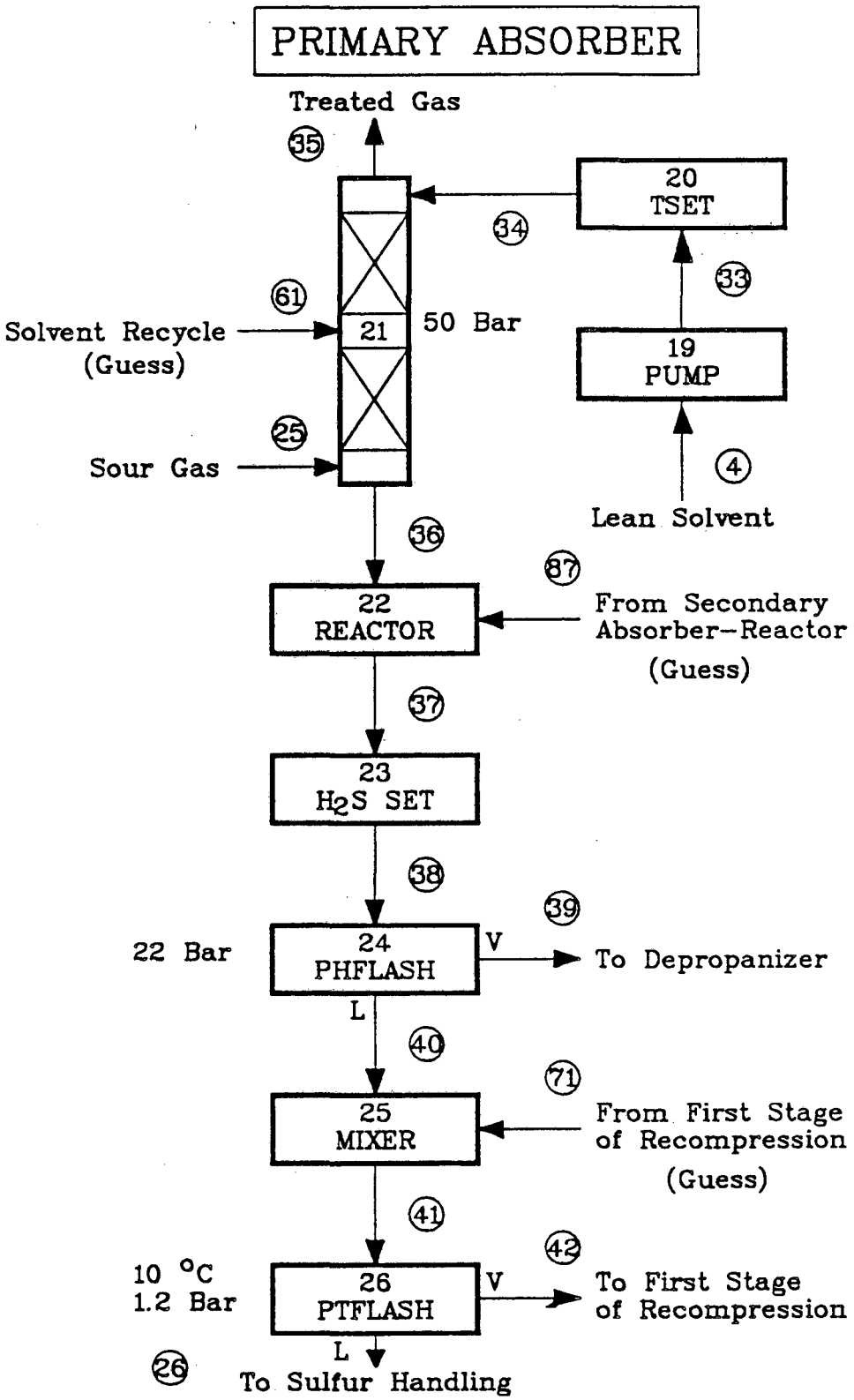

FIGURE C-5

Simulation Flow Diagram

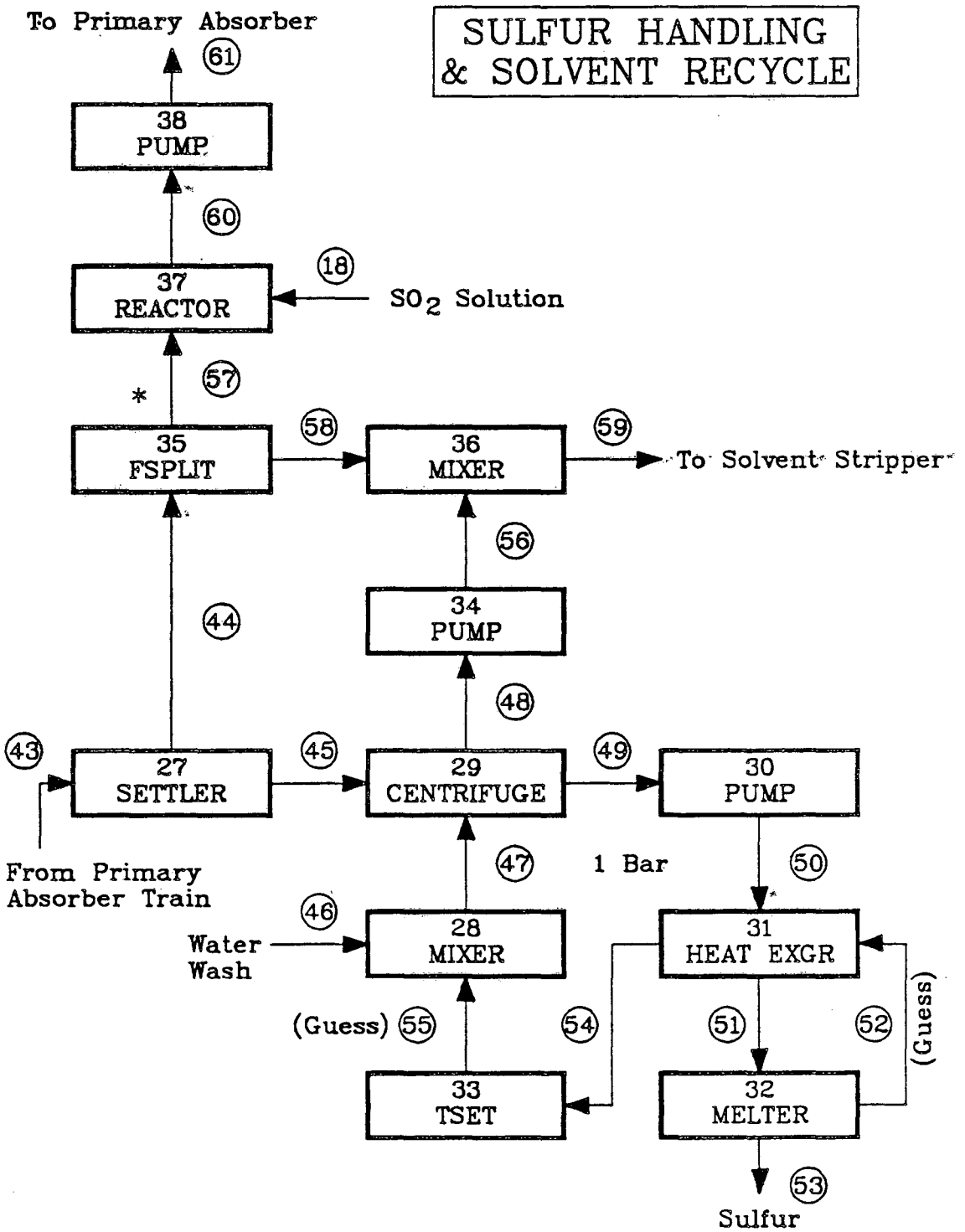

FIGURE C-6

Simulation Flow Diagram

SOLVENT & SOUR-WATER STRIPPERS

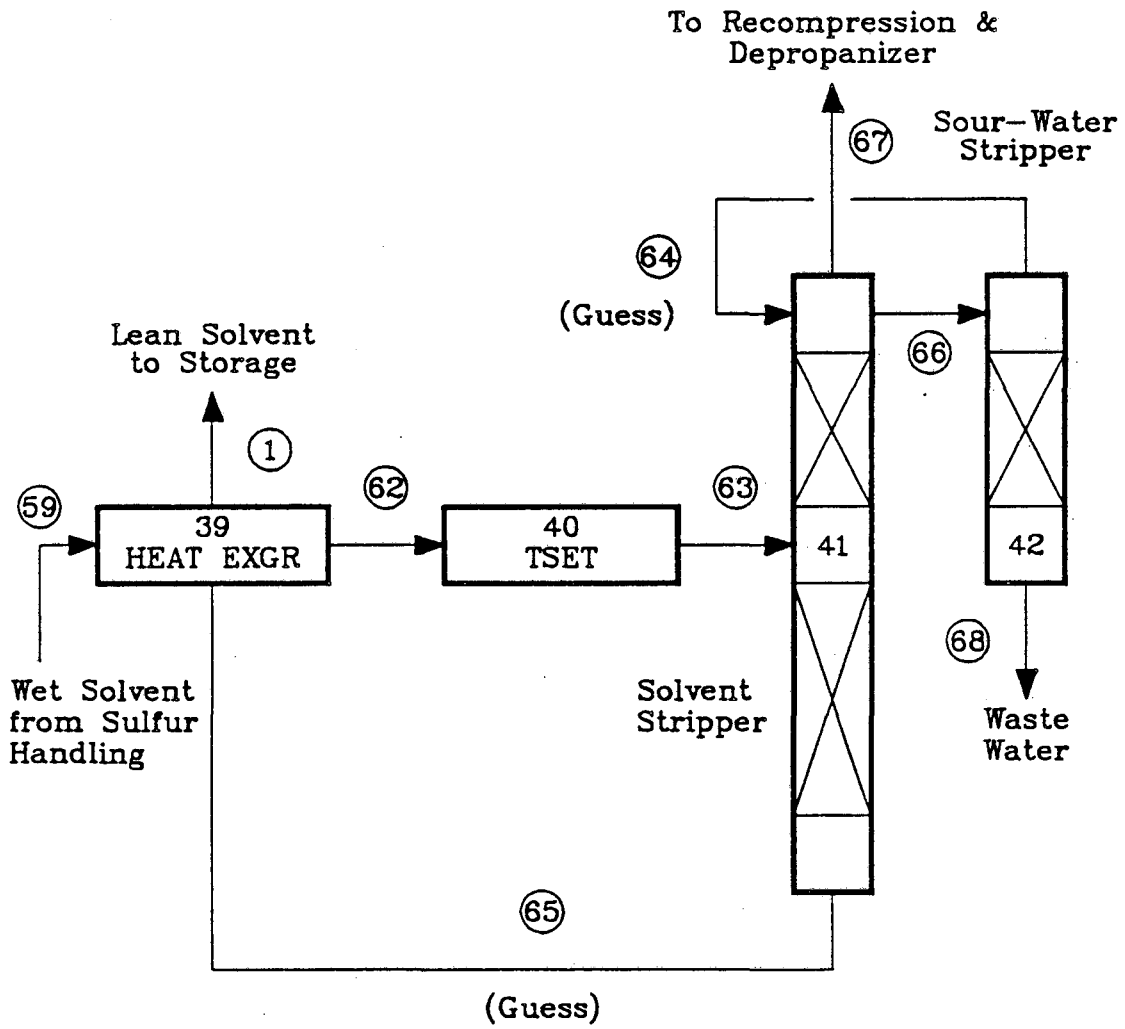

FIGURE C-7

Simulation Flow Diagram

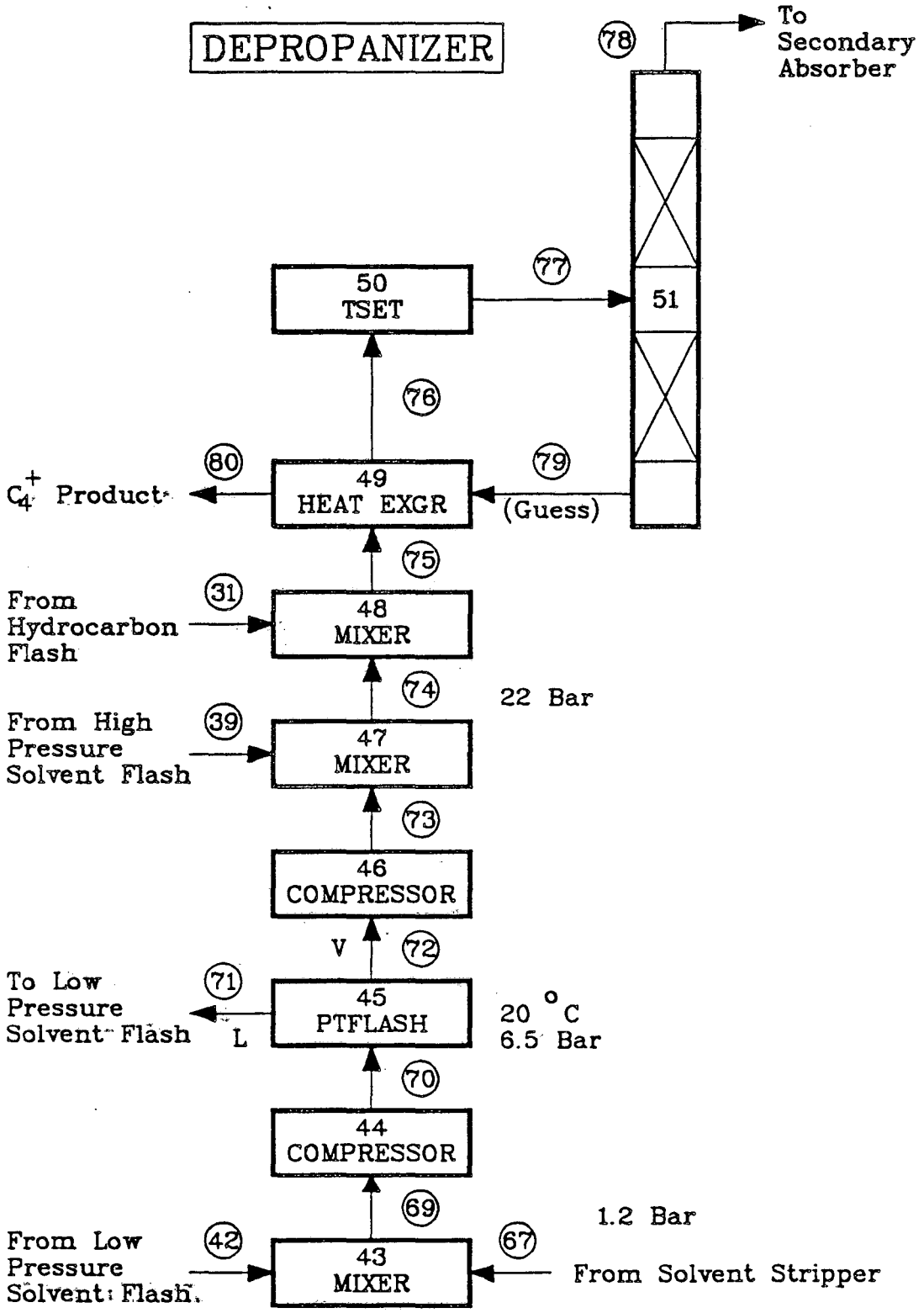

FIGURE C-8

Simulation Flow Diagram

SECONDARY ABSORBER/REACTOR

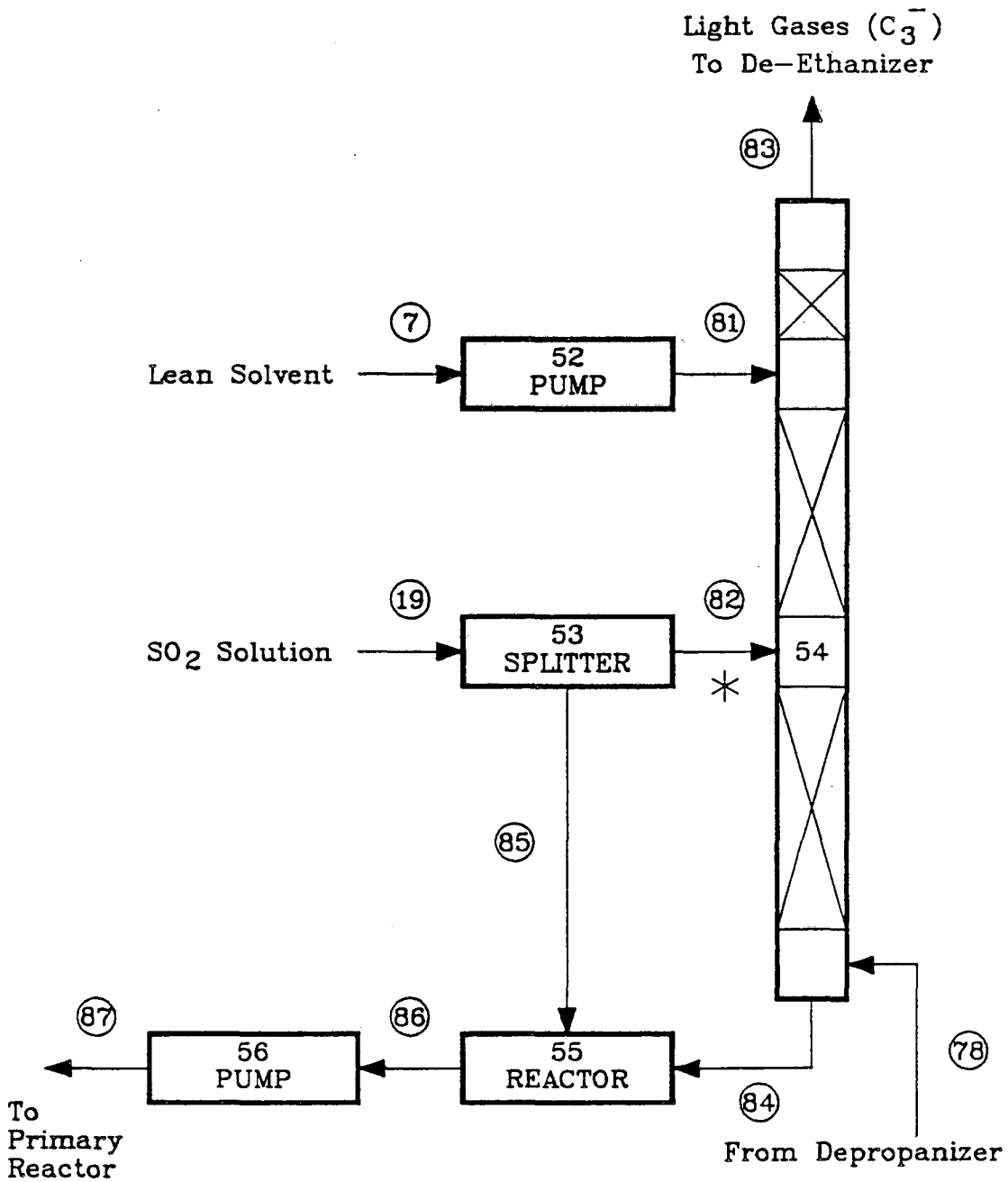

Appendix C.2

Operations & Specifications Summary

The operations and specifications summary was generated by the database input program for the **UCBSRP** flowsheet simulation (Neumann, 1986). This summary contains all information on interconnection of streams and specifications for the various "operation". All specifications are given in SI units. The specifications in this summary were used to generate the STREAMIO.DAT file used by the **UCBSRP** flowsheet simulator.

UNIT= 1.00

TSET ROUTINE

INLET STREAM NUMBER= 1
OUTLET STREAM NUMBER= 2
SET TEMPERATURE OF OUTLET= 293.00

UNIT= 2.00

STORAGE UNIT

INLET STREAM NUMBER= 2
OUTLET STREAM NUMBER= 3
OUTLET FLOW OF COMPONENT 1 (KMOLE/S) = 0.0290
OUTLET TEMPERATURE= 293.00

THIS UNIT SETS THE FLOW OF THE DESIRED COMPONENT
AND SCALES THE OUTPUT FLOWS OF THE OTHER COMPONENTS
AT THE SAME COMPOSITION AS THE INLET

UNIT= 3.00

FLOW SPLITTER

INLET STREAM NUMBER= 3
OUTLET STREAM 1 NUMBER= 4
OUTLET STREAM 2 NUMBER= 5
FLOW TO STREAM 1= 0.0041

UNIT= 4.00

FLOW SPLITTER

INLET STREAM NUMBER= 5
OUTLET STREAM 1 NUMBER= 6
OUTLET STREAM 2 NUMBER= 7
FLOW TO STREAM 1= 0.0150

UNIT= 5.00

FURNACE

INLET SULFUR STREAM NUMBER=	8
INLET RESIDUAL STREAM NUMBER=	9
INLET AIR STREAM NUMBER=	10
FLOW OF SO2 OUT OF FURNACE=	0.00415
OUTLET STREAM NUMBER=	11
OUTLET TEMPERATURE=	423.00
OUTLET PRESSURE=	100.00

UNIT= 6.00

ABSORBER/STRIPPER UNIT

```
NUMBER OF STAGES=                                  13
PRESSURE (KPA)=                                      100.00
VOLUME OF LIQUID ON A TRAY (M3)=                    0.00
LIQUID MOLAR DENSITY (KMOL/M3)=                     0.00
SECOND ORDER RATE CONSTANT=                           0.00
FEED1 STREAM NUMBER=11                   FEED1 STAGE NUMBER= 1
FEED2 STREAM NUMBER= 0                   FEED2 STAGE NUMBER= 0
FEED3 STREAM NUMBER= 6                   FEED3 STAGE NUMBER=10
FEED4 STREAM NUMBER= 0                   FEED4 STAGE NUMBER= 0
FEED5 STREAM NUMBER=12                   FEED5 STAGE NUMBER=13

EXIT VAPOR STREAM NUMBER=   13             EXIT LIQUID STREAM NUMBER= 14
REBOILER HEAT INPUT (KJ/S)=     0.00       CONDENSER TEMPERATURE (K)=    0.00
FRACTION OF CONDENSER LIQUID TO SIDE DRAW=       0.000
CONDENSER EXIT LIQUID STREAM NUMBER=              0
FIRST HEATER/INTERCOOLER STAGE=  0     HEAT LOAD (KJ/S)=       0.00
SECOND HEATER/INTERCOOLER STAGE= 0     HEAT LOAD (KJ/S)=       0.00
PROFILE FLAG= 1
(=0 GENERATE NEW INITIAL GUESSES)
(=1 USE PROFILE FROM PREVIOUS CALCULATION)
```

UNIT= 7.00

TSET ROUTINE

INLET STREAM NUMBER= 14
OUTLET STREAM NUMBER= 15
SET TEMPERATURE OF OUTLET= 308.00

UNIT= 8.00

MAKEUP UNIT

INLET STREAM NUMBER= 15
OUTLET STREAM NUMBER= 16
OUTLET FLOW OF COMPONENT 4 (KMOLE/S) = 0.00415

THIS UNIT SETS THE OUTLET FLOW OF THE DESIRED COMPONENT
WHILE PASSING THE FLOWS OF THE OTHER COMPONENTS THROUGH
FROM THE INLET TO THE OUTLET

UNIT= 9.00

PUMP

INLET STREAM NUMBER= 16
OUTLET STREAM NUMBER= 17
PRESSURE IN OUTLET= 2200.00
LIQUID MOLAR DENSITY (KMOLE/M3)= 4.56

UNIT=10.00

SPLITTER

INLET STREAM NUMBER= 17
OUTLET STREAM 1 NUMBER= 18
OUTLET STREAM 2 NUMBER= 19
FRACTION OF INLET TO OUTLET STREAM 1= 0.040

UNIT=11.00

MIXER

INLET STREAM 1 NUMBER=	20
INLET STREAM 2 NUMBER=	32
OUTLET STREAM NUMBER=	21
PRESSURE=	5000.00

UNIT=12.00

ADIABATIC FLASH

INLET STREAM NUMBER=	21
FLASH PRESSURE=	5000.00
OUTLET LIQUID STREAM NUMBER=	22
OUTLET VAPOR STREAM NUMBER=	23

UNIT=13.00

PARTIAL CONDENSER

INLET STREAM NUMBER=	23
PRESSURE IN CONDENSER=	5000.00
TEMPERATURE=	283.00
OUTLET LIQUID STREAM NUMBER=	24
OUTLET VAPOR STREAM NUMBER=	25

UNIT=14.00

MIXER

INLET STREAM 1 NUMBER=	22
INLET STREAM 2 NUMBER=	24
OUTLET STREAM NUMBER=	26
PRESSURE=	5000.00

UNIT=15.00

ADIABATIC FLASH

INLET STREAM NUMBER=	26
FLASH PRESSURE=	3000.00
OUTLET LIQUID STREAM NUMBER=	27
OUTLET VAPOR STREAM NUMBER=	28

UNIT=16.00

PARTIAL CONDENSER

INLET STREAM NUMBER=	27
PRESSURE IN CONDENSER=	2200.00
TEMPERATURE=	298.00
OUTLET LIQUID STREAM NUMBER=	29
OUTLET VAPOR STREAM NUMBER=	30

UNIT=17.00

MIXER

INLET STREAM 1 NUMBER=	29
INLET STREAM 2 NUMBER=	30
OUTLET STREAM NUMBER=	31
PRESSURE=	2200.00

UNIT=18.00

COMPRESSOR

INLET STREAM NUMBER=	28
OUTLET STREAM NUMBER=	32
OUTLET PRESSURE=	5000.00

UNIT=19.00

PUMP

INLET STREAM NUMBER=	4
OUTLET STREAM NUMBER=	33
PRESSURE IN OUTLET=	5000.00
LIQUID MOLAR DENSITY (KMOLE/M3)=	4.56

UNIT=20.00

TSET ROUTINE

INLET STREAM NUMBER=	33
OUTLET STREAM NUMBER=	34
SET TEMPERATURE OF OUTLET=	283.00

```
UNIT=21.00

                    ABSORBER/STRIPPER UNIT

NUMBER OF STAGES=                                  10
PRESSURE (KPA)=                                     5000.00
VOLUME OF LIQUID ON A TRAY (M3)=                    0.20
LIQUID MOLAR DENSITY (KMOL/M3)=                     4.56
SECOND ORDER RATE CONSTANT=                         100.00
FEED1 STREAM NUMBER=25                   FEED1 STAGE NUMBER= 1
FEED2 STREAM NUMBER= 0                   FEED2 STAGE NUMBER= 0
FEED3 STREAM NUMBER=61                   FEED3 STAGE NUMBER= 7
FEED4 STREAM NUMBER= 0                   FEED4 STAGE NUMBER= 0
FEED5 STREAM NUMBER=34                   FEED5 STAGE NUMBER=10

EXIT VAPOR STREAM NUMBER=   35             EXIT LIQUID STREAM NUMBER= 36
REBOILER HEAT INPUT (KJ/S)=     0.00       CONDENSER TEMPERATURE (K)=    0.00
FRACTION OF CONDENSER LIQUID TO SIDE DRAW=       0.000
CONDENSER EXIT LIQUID STREAM NUMBER=                0
FIRST HEATER/INTERCOOLER STAGE=  0       HEAT LOAD (KJ/S)=       0.00
SECOND HEATER/INTERCOOLER STAGE= 0       HEAT LOAD (KJ/S)=       0.00
PROFILE FLAG= 1
(=0 GENERATE NEW INITIAL GUESSES)
(=1 USE PROFILE FROM PREVIOUS CALCULATION)
```

UNIT=22.00

REACTOR

INLET STREAM 1 NUMBER=	36
INLET STREAM 2 NUMBER=	87
OUTLET STREAM NUMBER=	37
PRESSURE=	5000.00
HEAT REMOVED (KJ/S) =	0.00
FRACTION CONVERSION=	0.99999
SECOND ORDER RATE CONSTANT=	100.00

UNIT=23.00

MAKEUP UNIT

INLET STREAM NUMBER=	37	
OUTLET STREAM NUMBER=	38	
OUTLET FLOW OF COMPONENT 3	(KMOLE/S) =	0.00042

THIS UNIT SETS THE OUTLET FLOW OF THE DESIRED COMPONENT WHILE PASSING THE FLOWS OF THE OTHER COMPONENTS THROUGH FROM THE INLET TO THE OUTLET

UNIT=24.00

ADIABATIC FLASH

INLET STREAM NUMBER=	38
FLASH PRESSURE=	2200.00
OUTLET LIQUID STREAM NUMBER=	40
OUTLET VAPOR STREAM NUMBER=	39

UNIT=25.00

MIXER

INLET STREAM 1 NUMBER=	40
INLET STREAM 2 NUMBER=	71
OUTLET STREAM NUMBER=	41
PRESSURE=	120.00

UNIT=26.00

PARTIAL CONDENSER

INLET STREAM NUMBER=	41
PRESSURE IN CONDENSER=	120.00
TEMPERATURE=	283.00
OUTLET LIQUID STREAM NUMBER=	43
OUTLET VAPOR STREAM NUMBER=	42

UNIT=27.00

SULFUR SETTLER

INLET STREAM NUMBER=	43
OUTLET SULFUR STREAM NUMBER=	45
OUTLET SOLVENT STREAM NUMBER=	44
WT% SULFUR IN SULFUR STREAM=	50.00
PRESSURE=	120.00

UNIT=28.00

MIXER

INLET STREAM 1 NUMBER=	46
INLET STREAM 2 NUMBER=	55
OUTLET STREAM NUMBER=	47
PRESSURE=	100.00

UNIT=29.00

SULFUR CENTRIFUGE

INLET STREAM NUMBER=	45
INLET WASH STREAM NUMBER=	47
OUTLET SULFUR SLURRY STREAM NUMBER=	49
OUTLET LIQUID STREAM NUMBER=	48
PRESSURE=	100.00
WT% SULFUR TO SLURRY IN FIRST SEPARATION=	100.00
WT% SULFUR TO SLURRY IN EXIT=	33.00

UNIT=30.00

PUMP

INLET STREAM NUMBER=	49
OUTLET STREAM NUMBER=	50
PRESSURE IN OUTLET=	200.00
LIQUID MOLAR DENSITY (KMOLE/M3)=	4.56

UNIT=31.00

HEAT EXCHANGER

INLET STREAM 1 (HOT) NUMBER=	52
INLET STREAM 2 (COLD) NUMBER=	50
OUTLET STREAM 1 NUMBER=	54
OUTLET STREAM 2 NUMBER=	51
UA (KJ/S-K) =	14.00

UNIT=32.00

MELTER/DECANTER

INLET STREAM NUMBER=	51
OUTLET NON-SULFUR STREAM NUMBER=	52
OUTLET SULFUR STREAM NUMBER=	53
TEMPERATURE=	393.00
PRESSURE=	200.00

UNIT=33.00

TSET ROUTINE

INLET STREAM NUMBER=	54
OUTLET STREAM NUMBER=	55
SET TEMPERATURE OF OUTLET=	308.00

UNIT=34.00

PUMP

INLET STREAM NUMBER=	48
OUTLET STREAM NUMBER=	56
PRESSURE IN OUTLET=	120.00
LIQUID MOLAR DENSITY (KMOLE/M3)=	4.56

UNIT=35.00

FLOW SPLITTER

INLET STREAM NUMBER=	44
OUTLET STREAM 1 NUMBER=	57
OUTLET STREAM 2 NUMBER=	58
FLOW TO STREAM 1=	0.1800

UNIT=36.00

MIXER

INLET STREAM 1 NUMBER=	56
INLET STREAM 2 NUMBER=	58
OUTLET STREAM NUMBER=	59
PRESSURE=	120.00

UNIT=37.00

REACTOR

INLET STREAM 1 NUMBER=	57
INLET STREAM 2 NUMBER=	18
OUTLET STREAM NUMBER=	60
PRESSURE=	120.00
HEAT REMOVED (KJ/S) =	0.00
FRACTION CONVERSION=	0.99990
SECOND ORDER RATE CONSTANT=	100.00

UNIT=38.00

PUMP

INLET STREAM NUMBER=	60
OUTLET STREAM NUMBER=	61
PRESSURE IN OUTLET=	5000.00
LIQUID MOLAR DENSITY (KMOLE/M3)=	4.56

UNIT=39.00

HEAT EXCHANGER

INLET STREAM 1 (HOT) NUMBER=	65
INLET STREAM 2 (COLD) NUMBER=	59
OUTLET STREAM 1 NUMBER=	1
OUTLET STREAM 2 NUMBER=	62
UA (KJ/S-K) =	80.00

UNIT=40.00

TSET ROUTINE

INLET STREAM NUMBER=	62
OUTLET STREAM NUMBER=	63
SET TEMPERATURE OF OUTLET=	394.00

```
UNIT=41.00

                    DISTILLATION UNIT
NUMBER OF STAGES= 10                      PRESSURE (KPA)=      120.00
FEED1 STREAM NUMBER= 0                    FEED1 STAGE NUMBER= 0
FEED2 STREAM NUMBER= 0                    FEED2 STAGE NUMBER= 0
FEED3 STREAM NUMBER=63                    FEED3 STAGE NUMBER= 5
FEED4 STREAM NUMBER= 0                    FEED4 STAGE NUMBER= 0
FEED5 STREAM NUMBER=64                    FEED5 STAGE NUMBER=10
EXIT VAPOR STREAM NUMBER=   67            EXIT LIQUID STREAM NUMBER=    65
FIRST HEATER/INTERCOOLER STAGE=  0        HEAT LOAD (KJ/S)=       0.00
SECOND HEATER/INTERCOOLER STAGE= 0        HEAT LOAD (KJ/S)=       0.00

BOTTOM SPEC=  1              IBOT=  2             SPECBOT=     0.1100
TOP SPEC=     2              ITOP=  2             SPECTOP=   308.0000
                             FRACT TO SIDEDRAW STRM # 66  = 0.650
BOTTOM SPEC=:                             TOP SPEC=:
1=SET MOLE FRACT OF COMP. IBOT            1=NO TOP SPECIFICATION
2=SET REBOILER HEAT DUTY                  2=SET CONDENSER TEMPERATURE
3=SET RECOVERY FRACT OF COMP. IBOT        3=SET RECOVERY FRACT OF COMP. ITOP
SPECBOT (TOP) = VALUES FOR SET PARAMETER (HEAT, TEMP., ETC.)

PROFILE FLAG= 1
(=0 GENERATE NEW INITIAL GUESSES)
(=1 USE PROFILE FROM PREVIOUS CALCULATION)
```

```
UNIT=42.00

                    DISTILLATION UNIT
NUMBER OF STAGES=  5                    PRESSURE (KPA)=      120.00
FEED1 STREAM NUMBER= 0                  FEED1 STAGE NUMBER= 0
FEED2 STREAM NUMBER= 0                  FEED2 STAGE NUMBER= 0
FEED3 STREAM NUMBER= 0                  FEED3 STAGE NUMBER= 0
FEED4 STREAM NUMBER= 0                  FEED4 STAGE NUMBER= 0
FEED5 STREAM NUMBER=66                  FEED5 STAGE NUMBER= 5
EXIT VAPOR STREAM NUMBER=   64          EXIT LIQUID STREAM NUMBER=    68
FIRST HEATER/INTERCOOLER STAGE=  0      HEAT LOAD (KJ/S)=       0.00
SECOND HEATER/INTERCOOLER STAGE= 0      HEAT LOAD (KJ/S)=       0.00

BOTTOM SPEC=  3              IBOT=  2            SPECBOT=     0.9900
TOP SPEC=     1              ITOP=  0            SPECTOP=     0.0000
                             FRACT TO SIDEDRAW STRM #  0  = 0.000
BOTTOM SPEC=:                           TOP SPEC=:
1=SET MOLE FRACT OF COMP. IBOT          1=NO TOP SPECIFICATION
2=SET REBOILER HEAT DUTY                2=SET CONDENSER TEMPERATURE
3=SET RECOVERY FRACT OF COMP. IBOT      3=SET RECOVERY FRACT OF COMP. ITOP
SPECBOT (TOP) = VALUES FOR SET PARAMETER (HEAT, TEMP., ETC.)

PROFILE FLAG= 1
(=0 GENERATE NEW INITIAL GUESSES)
(=1 USE PROFILE FROM PREVIOUS CALCULATION)
```

UNIT=43.00

MIXER

INLET STREAM 1 NUMBER=	42
INLET STREAM 2 NUMBER=	67
OUTLET STREAM NUMBER=	69
PRESSURE=	120.00

UNIT=44.00

COMPRESSOR

INLET STREAM NUMBER=	69
OUTLET STREAM NUMBER=	70
OUTLET PRESSURE=	650.00

UNIT=45.00

PARTIAL CONDENSER

INLET STREAM NUMBER=	70
PRESSURE IN CONDENSER=	650.00
TEMPERATURE=	293.00
OUTLET LIQUID STREAM NUMBER=	71
OUTLET VAPOR STREAM NUMBER=	72

UNIT=46.00

COMPRESSOR

INLET STREAM NUMBER=	72
OUTLET STREAM NUMBER=	73
OUTLET PRESSURE=	2200.00

UNIT=47.00

MIXER

INLET STREAM 1 NUMBER=	39
INLET STREAM 2 NUMBER=	73
OUTLET STREAM NUMBER=	74
PRESSURE=	2200.00

UNIT=48.00

MIXER

INLET STREAM 1 NUMBER=	31
INLET STREAM 2 NUMBER=	74
OUTLET STREAM NUMBER=	75
PRESSURE=	2200.00

UNIT=49.00

HEAT EXCHANGER

INLET STREAM 1 (HOT) NUMBER=	79
INLET STREAM 2 (COLD) NUMBER=	75
OUTLET STREAM 1 NUMBER=	80
OUTLET STREAM 2 NUMBER=	76
UA (KJ/S-K) =	55.00

UNIT=50.00

TSET ROUTINE

INLET STREAM NUMBER=	76
OUTLET STREAM NUMBER=	77
SET TEMPERATURE OF OUTLET=	334.00

```
UNIT=51.00

                    DISTILLATION UNIT
NUMBER OF STAGES= 20                      PRESSURE (KPA)=     2200.00
FEED1 STREAM NUMBER= 0                    FEED1 STAGE NUMBER= 0
FEED2 STREAM NUMBER= 0                    FEED2 STAGE NUMBER= 0
FEED3 STREAM NUMBER=77                    FEED3 STAGE NUMBER=10
FEED4 STREAM NUMBER= 0                    FEED4 STAGE NUMBER= 0
FEED5 STREAM NUMBER= 0                    FEED5 STAGE NUMBER= 0
EXIT VAPOR STREAM NUMBER=   78            EXIT LIQUID STREAM NUMBER=    79
FIRST HEATER/INTERCOOLER STAGE=  0        HEAT LOAD (KJ/S)=        0.00
SECOND HEATER/INTERCOOLER STAGE= 0        HEAT LOAD (KJ/S)=        0.00

BOTTOM SPEC=  3              IBOT= 13              SPECBOT=     0.9800
TOP SPEC=     3              ITOP= 12              SPECTOP=     0.9900
                             FRACT TO SIDEDRAW STRM #  0  = 0.000
BOTTOM SPEC=:                             TOP SPEC=:
1=SET MOLE FRACT OF COMP. IBOT            1=NO TOP SPECIFICATION
2=SET REBOILER HEAT DUTY                  2=SET CONDENSER TEMPERATURE
3=SET RECOVERY FRACT OF COMP. IBOT        3=SET RECOVERY FRACT OF COMP. ITOP
SPECBOT (TOP) = VALUES FOR SET PARAMETER (HEAT, TEMP., ETC.)

PROFILE FLAG= 1
(=0 GENERATE NEW INITIAL GUESSES)
(=1 USE PROFILE FROM PREVIOUS CALCULATION)
```

UNIT=52.00

PUMP

INLET STREAM NUMBER=	7
OUTLET STREAM NUMBER=	81
PRESSURE IN OUTLET=	2200.00
LIQUID MOLAR DENSITY (KMOLE/M3)=	4.56

UNIT=53.00

SPLITTER

INLET STREAM NUMBER=	19
OUTLET STREAM 1 NUMBER=	82
OUTLET STREAM 2 NUMBER=	85
FRACTION OF INLET TO OUTLET STREAM 1=	0.490

UNIT=54.00

ABSORBER/STRIPPER UNIT

```
NUMBER OF STAGES=                                  15
PRESSURE (KPA)=                                     2200.00
VOLUME OF LIQUID ON A TRAY (M3)=                    0.06
LIQUID MOLAR DENSITY (KMOL/M3)=                     4.56
SECOND ORDER RATE CONSTANT=                         100.00
FEED1 STREAM NUMBER=78                   FEED1 STAGE NUMBER= 1
FEED2 STREAM NUMBER= 0                   FEED2 STAGE NUMBER= 0
FEED3 STREAM NUMBER=82                   FEED3 STAGE NUMBER= 5
FEED4 STREAM NUMBER=81                   FEED4 STAGE NUMBER=13
FEED5 STREAM NUMBER= 0                   FEED5 STAGE NUMBER= 0

EXIT VAPOR STREAM NUMBER=   83             EXIT LIQUID STREAM NUMBER= 84
REBOILER HEAT INPUT (KJ/S)=     0.00       CONDENSER TEMPERATURE (K)=  308.00
FRACTION OF CONDENSER LIQUID TO SIDE DRAW=        0.000
CONDENSER EXIT LIQUID STREAM NUMBER=               0
FIRST HEATER/INTERCOOLER STAGE=  0       HEAT LOAD (KJ/S)=       0.00
SECOND HEATER/INTERCOOLER STAGE= 0       HEAT LOAD (KJ/S)=       0.00
PROFILE FLAG= 1
(=0 GENERATE NEW INITIAL GUESSES)
(=1 USE PROFILE FROM PREVIOUS CALCULATION)
```

UNIT=55.00

REACTOR

INLET STREAM 1 NUMBER=	84
INLET STREAM 2 NUMBER=	85
OUTLET STREAM NUMBER=	86
PRESSURE=	2200.00
HEAT REMOVED (KJ/S) =	0.00
FRACTION CONVERSION=	0.99990
SECOND ORDER RATE CONSTANT=	100.00

UNIT=56.00

PUMP

INLET STREAM NUMBER=	86
OUTLET STREAM NUMBER=	87
PRESSURE IN OUTLET=	5000.00
LIQUID MOLAR DENSITY (KMOLE/M3)=	4.56

Appendix C.3

Detailed Stream Data

The detailed stream data for the converged simulation are given here. The stream numbers correspond to those in the simulation flow diagram shown in Appendix C.1. The units used in this output are given below.

Composition	mole fraction
Flow	kmole/sec
Temperature	Kelvin
Pressure	kPa
Enthalpy	kJ/kmole

ST#	SOLV	H2O	H2S	SO2	SULD	CO2	N2	C1	C2	C3	C4	C5+	SULP	O2	FLOW	TEMP	PRES	ENTH	PHAS
1	.8823E+00	.1100E+00	.4969E-07	.3880E-08	.7700E-02	.1684E-08	.0000E+00	.0000E+00	.0000E+00	.1795E-07	.1496E-06	.0000E+00	.0000E+00	.0000E+00	.3286E-01	.2926E+03	.1200E+03	-.319023677E+05	1.0
2	.8823E+00	.1100E+00	.4981E-07	.3888E-08	.7704E-02	.1689E-08	.0000E+00	.0000E+00	.0000E+00	.1800E-07	.1501E-06	.0000E+00	.0000E+00	.0000E+00	.3282E-01	.2930E+03	.1200E+03	-.317586968E+05	1.0
3	.8823E+00	.1100E+00	.4981E-07	.3888E-08	.7704E-02	.1689E-08	.0000E+00	.0000E+00	.0000E+00	.1800E-07	.1501E-06	.0000E+00	.0000E+00	.0000E+00	.3287E-01	.2930E+03	.1200E+03	-.317586968E+05	1.0
4	.8823E+00	.1100E+00	.4981E-07	.3888E-08	.7704E-02	.1689E-08	.0000E+00	.0000E+00	.0000E+00	.1800E-07	.1501E-06	.0000E+00	.0000E+00	.0000E+00	.4100E-02	.2930E+03	.1200E+03	-.317586968E+05	1.0
5	.8823E+00	.1100E+00	.4981E-07	.3888E-08	.7704E-02	.1689E-08	.0000E+00	.0000E+00	.0000E+00	.1800E-07	.1501E-06	.0000E+00	.0000E+00	.0000E+00	.2877E-01	.2930E+03	.1200E+03	-.317586968E+05	1.0
6	.8823E+00	.1100E+00	.4981E-07	.3888E-08	.7704E-02	.1689E-08	.0000E+00	.0000E+00	.0000E+00	.1800E-07	.1501E-06	.0000E+00	.0000E+00	.0000E+00	.1500E-01	.2930E+03	.1200E+03	-.317586968E+05	1.0
7	.8823E+00	.1100E+00	.4981E-07	.3888E-08	.7704E-02	.1689E-08	.0000E+00	.0000E+00	.0000E+00	.1800E-07	.1501E-06	.0000E+00	.0000E+00	.0000E+00	.1377E-01	.2930E+03	.1200E+03	-.317586968E+05	1.0
8	.0000E+00	.0000E+00	.0000E+00	.0000E+00	.0000E+00	.0000E+00	.0000E+00	.0000E+00	.0000E+00	.0000E+00	.0000E+00	.0000E+00	.1000E+01	.0000E+00	.4150E-02	.3930E+03	.0000E+00	0.227979945E+04	1.0
9	.0000E+00	.0000E+00	.0000E+00	.0000E+00	.0000E+00	.0000E+00	.0000E+00	.0000E+00	.0000E+00	.0000E+00	.0000E+00	.0000E+00	.0000E+00	.0000E+00	.0000E+00	.0000E+00	.0000E+00	0.000000000E+00	.0
10	.0000E+00	.0000E+00	.0000E+00	.0000E+00	.0000E+00	.0000E+00	.7900E+00	.0000E+00	.0000E+00	.0000E+00	.0000E+00	.0000E+00	.0000E+00	.2100E+00	.1976E-01	.2980E+03	.1000E+03	0.870142382E+04	2.0
11	.0000E+00	.0000E+00	.0000E+00	.2100E+00	.0000E+00	.0000E+00	.7900E+00	.0000E+00	.0000E+00	.0000E+00	.0000E+00	.0000E+00	.0000E+00	.0000E+00	.1976E-01	.4230E+03	.1000E+03	-.486227741E+05	2.0
12	.0000E+00	.1000E+01	.0000E+00	.0000E+00	.0000E+00	.0000E+00	.0000E+00	.0000E+00	.0000E+00	.0000E+00	.0000E+00	.0000E+00	.0000E+00	.0000E+00	.3500E-03	.3080E+03	.1000E+03	-.272082220E+06	1.0
13	.1246E-08	.1379E-01	.0000E+00	.3412E-06	.0000E+00	.0000E+00	.9862E+00	.0000E+00	.0000E+00	.0000E+00	.0000E+00	.0000E+00	.0000E+00	.0000E+00	.1583E-01	.2851E+03	.1000E+03	0.500153242E+04	2.0
14	.6863E+00	.9240E-01	.0000E+00	.2152E+00	.5993E-02	.0000E+00	.1392E-03	.0000E+00	.0000E+00	.0000E+00	.0000E+00	.0000E+00	.0000E+00	.0000E+00	.1928E-01	.3350E+03	.1000E+03	-.835722553E+05	1.0
15	.6863E+00	.9240E-01	.0000E+00	.2152E+00	.5993E-02	.0000E+00	.1392E-03	.0000E+00	.0000E+00	.0000E+00	.0000E+00	.0000E+00	.0000E+00	.0000E+00	.1928E-01	.3080E+03	.1000E+03	-.913293911E+05	1.0
16	.6863E+00	.9240E-01	.0000E+00	.2152E+00	.5993E-02	.0000E+00	.1392E-03	.0000E+00	.0000E+00	.0000E+00	.0000E+00	.0000E+00	.0000E+00	.0000E+00	.1928E-01	.3080E+03	.1000E+03	-.913294545E+05	1.0
17	.6863E+00	.9240E-01	.0000E+00	.2152E+00	.5993E-02	.0000E+00	.1392E-03	.0000E+00	.0000E+00	.0000E+00	.0000E+00	.0000E+00	.0000E+00	.0000E+00	.1928E-01	.3080E+03	.1000E+03	-.913294545E+05	1.0
18	.6863E+00	.9240E-01	.0000E+00	.2152E+00	.5993E-02	.0000E+00	.1392E-03	.0000E+00	.0000E+00	.0000E+00	.0000E+00	.0000E+00	.0000E+00	.0000E+00	.7714E-03	.3080E+03	.2200E+04	-.913294545E+05	1.0
19	.6863E+00	.9240E-01	.0000E+00	.2152E+00	.5993E-02	.0000E+00	.1392E-03	.0000E+00	.0000E+00	.0000E+00	.0000E+00	.0000E+00	.0000E+00	.0000E+00	.1851E-01	.3080E+03	.2200E+04	-.913294545E+05	1.0
20	.0000E+00	.6000E-03	.6000E-02	.0000E+00	.0000E+00	.3500E-01	.0000E+00	.7000E+00	.9640E-01	.8400E-01	.4500E-01	.3300E-01	.0000E+00	.0000E+00	.1385E+01	.3080E+03	.5000E+04	-.806028606E+05	3.0
21	.0000E+00	.5871E-03	.6033E-02	.0000E+00	.0000E+00	.3498E-01	.0000E+00	.7004E+00	.9727E-01	.8394E-01	.4441E-01	.3238E-01	.0000E+00	.0000E+00	.1416E+01	.3080E+03	.5000E+04	-.805046736E+05	3.0
22	.0000E+00	.4748E-02	.1176E-01	.0000E+00	.0000E+00	.6032E-02	.0000E+00	.1573E+00	.1073E+00	.2476E+00	.2388E+00	.2259E+00	.0000E+00	.0000E+00	.1739E+00	.3080E+03	.5000E+04	-.107110013E+06	1.0
23	.0000E+00	.4577E-05	.5231E-02	.0000E+00	.0000E+00	.3903E-01	.0000E+00	.7764E+00	.9587E-01	.6102E-01	.1720E-01	.5287E-02	.0000E+00	.0000E+00	.1242E+01	.3080E+03	.5000E+04	-.767674934E+05	2.0
24	.0000E+00	.7282E-04	.1824E-01	.0000E+00	.0000E+00	.1548E-01	.0000E+00	.2181E+00	.1657E+00	.3266E+00	.1821E+00	.7379E-01	.0000E+00	.0000E+00	.7781E-01	.2830E+03	.5000E+04	-.102831854E+06	1.0
25	.0000E+00	.1474E-07	.4361E-02	.0000E+00	.0000E+00	.4061E-01	.0000E+00	.8138E+00	.9120E-01	.4327E-01	.6171E-02	.7073E-03	.0000E+00	.0000E+00	.1164E+01	.2830E+03	.5000E+04	-.778834184E+05	2.0
26	.0000E+00	.3302E-02	.1376E-01	.0000E+00	.0000E+00	.8954E-02	.0000E+00	.1761E+00	.1254E+00	.2720E+00	.2213E+00	.1788E+00	.0000E+00	.0000E+00	.2517E+00	.3007E+03	.5000E+04	-.105787271E+06	3.0
27	.0000E+00	.3760E-02	.1463E-01	.0000E+00	.0000E+00	.5476E-02	.0000E+00	.1009E+00	.1238E+00	.2985E+00	.2495E+00	.2031E+00	.0000E+00	.0000E+00	.2210E+00	.2912E+03	.3000E+04	-.109776957E+06	1.0
28	.0000E+00	.2306E-05	.7520E-02	.0000E+00	.0000E+00	.3403E-01	.0000E+00	.7185E+00	.1367E+00	.8115E-01	.1772E-01	.4162E-02	.0000E+00	.0000E+00	.3065E-01	.2912E+03	.3000E+04	-.770085618E+05	2.0
29	.0000E+00	.4118E-02	.1485E-01	.0000E+00	.0000E+00	.2947E-02	.0000E+00	.5517E-01	.1165E+00	.3139E+00	.2703E+00	.2217E+00	.0000E+00	.0000E+00	.2017E+00	.2980E+03	.2200E+04	-.110528823E+06	1.0
30	.0000E+00	.5280E-05	.1234E-01	.0000E+00	.0000E+00	.3196E-01	.0000E+00	.5791E+00	.1997E+00	.1369E+00	.3179E-01	.7775E-02	.0000E+00	.0000E+00	.1927E-01	.2980E+03	.2200E+04	-.776092489E+05	2.0
31	.0000E+00	.3760E-02	.1463E-01	.0000E+00	.0000E+00	.5476E-02	.0000E+00	.1009E+00	.1238E+00	.2985E+00	.2495E+00	.2031E+00	.0000E+00	.0000E+00	.2210E+00	.2980E+03	.2200E+04	-.107658609E+06	3.0
32	.0000E+00	.2306E-05	.7520E-02	.0000E+00	.0000E+00	.3403E-01	.0000E+00	.7185E+00	.1367E+00	.8115E-01	.1772E-01	.4162E-02	.0000E+00	.0000E+00	.3065E-01	.2954E+03	.5000E+04	-.760666407E+05	2.0
33	.8823E+00	.1100E+00	.4981E-07	.3888E-08	.7704E-02	.1689E-08	.0000E+00	.0000E+00	.0000E+00	.1800E-07	.1501E-06	.0000E+00	.0000E+00	.0000E+00	.4100E-02	.2930E+03	.5000E+04	-.317586968E+05	1.0
34	.8823E+00	.1100E+00	.4981E-07	.3888E-08	.7704E-02	.1689E-08	.0000E+00	.0000E+00	.0000E+00	.1800E-07	.1501E-06	.0000E+00	.0000E+00	.0000E+00	.4100E-02	.2830E+03	.5000E+04	-.353035564E+05	1.0
35	.6515E-05	.9247E-04	.3700E-07	.8011E-07	.0000E+00	.2846E-01	.9775E-07	.8489E+00	.8845E-01	.3112E-01	.2559E-02	.3873E-03	.0000E+00	.0000E+00	.1100E+01	.2944E+03	.5000E+04	-.734372830E+05	2.0
36	.4981E+00	.1996E+00	.1985E-01	.6703E-07	.5175E-02	.7341E-01	.0000E+00	.5401E-01	.3655E-01	.8370E-01	.2718E-01	.2433E-02	.0000E+00	.0000E+00	.2490E+00	.2896E+03	.5000E+04	-.103864890E+06	1.0
37	.4810E+00	.1963E+00	.1389E-02	.7290E-07	.1095E-01	.6640E-01	.4252E-05	.4403E-01	.3205E-01	.1103E+00	.2307E-01	.1958E-02	.3253E-01	.0000E+00	.3095E+00	.3015E+03	.5000E+04	-.977406910E+05	4.0
38	.4811E+00	.1963E+00	.1357E-02	.7290E-07	.1095E-01	.6641E-01	.4253E-05	.4403E-01	.3205E-01	.1103E+00	.2308E-01	.1958E-02	.3254E-01	.0000E+00	.3095E+00	.3015E+03	.5000E+04	-.977327097E+05	1.0
39	.1407E-04	.6562E-03	.3069E-03	.7254E-09	.0000E+00	.9589E-01	.7414E-04	.5798E+00	.1708E+00	.1398E+00	.1135E-01	.1434E-02	.0000E+00	.0000E+00	.1624E-01	.2990E+03	.2200E+04	-.976962965E+05	2.0
40	.5077E+00	.2071E+00	.1415E-02	.7690E-07	.1155E-01	.6477E-01	.3824E-06	.1436E-01	.2437E-01	.1087E+00	.2373E-01	.1987E-02	.3434E-01	.0000E+00	.2933E+00	.2990E+03	.2200E+04	-.977348253E+05	1.0
41	.5052E+00	.2076E+00	.1415E-02	.7727E-07	.1149E-01	.6449E-01	.3806E-06	.1430E-01	.2435E-01	.1099E+00	.2477E-01	.2318E-02	.3416E-01	.0000E+00	.2947E+00	.2887E+03	.1200E+03	-.980574646E+05	3.0
42	.1370E-03	.6679E-02	.2894E-02	.7641E-08	.0000E+00	.2729E+00	.1897E-05	.7093E-01	.1166E+00	.4495E+00	.7318E-01	.7181E-02	.0000E+00	.0000E+00	.5906E-01	.2830E+03	.1200E+03	-.164774618E+06	2.0
43	.6317E+00	.2579E+00	.1045E-02	.9472E-07	.1438E-01	.1226E-01	.5648E-09	.1085E-03	.1239E-02	.2482E-01	.1264E-01	.1099E-02	.4273E-01	.0000E+00	.2357E+00	.2830E+03	.1200E+03	-.830962041E+05	1.0
44	.6661E+00	.2720E+00	.1101E-02	.9988E-07	.5817E-02	.1292E-01	.5956E-09	.1144E-03	.1306E-02	.2618E-01	.1333E-01	.1159E-02	.0000E+00	.0000E+00	.2210E+00	.2830E+03	.1200E+03	-.876256497E+05	4.0
45	.1136E+00	.4639E-01	.1879E-03	.1704E-07	.9921E-03	.2204E-02	.1016E-09	.1951E-04	.2228E-03	.4465E-02	.2274E-02	.1977E-03	.8294E+00	.0000E+00	.1466E-01	.2830E+03	.1200E+03	-.147359307E+05	4.0

46	.0000E+00	.1000E+01	.0000E+00	.0000E+00	.0000E+00	.0000E+00	.0000E+00	.0000E+00	.0000E+00	.0000E+00	.0000E+00	.0000E+00	.0000E+00	.0000E+00	.1390E-02	.3080E+03	.1000E+03	-.272082220E+06	1.0
47	.9692E-05	.1000E+01	.1571E-07	.1378E-11	.8282E-07	.1851E-06	.8227E-14	.1642E-08	.1885E-07	.3794E-06	.1929E-06	.1669E-07	.0000E+00	.0000E+00	.4527E-01	.3080E+03	.1000E+03	-.272079441E+06	1.0
48	.4279E+00	.5323E+00	.7076E-03	.6416E-07	.3736E-02	.8302E-02	.3826E-09	.7349E-04	.8390E-03	.1681E-01	.8564E-02	.7444E-03	.0000E+00	.0000E+00	.3892E-02	.2841E+03	.1000E+03	-.153647096E+06	3.0
49	.7877E-05	.7830E+00	.1278E-07	.1122E-11	.6736E-07	.1505E-06	.6699E-14	.1335E-08	.1533E-07	.3084E-06	.1568E-06	.1357E-07	.2170E+00	.0000E+00	.5603E-01	.3036E+03	.1000E+03	-.212988463E+06	4.0
50	.7877E-05	.7830E+00	.1278E-07	.1122E-11	.6736E-07	.1505E-06	.6699E-14	.1335E-08	.1533E-07	.3084E-06	.1568E-06	.1357E-07	.2170E+00	.0000E+00	.5603E-01	.3036E+03	.2000E+03	-.212988463E+06	1.0
51	.7877E-05	.7830E+00	.1278E-07	.1122E-11	.6736E-07	.1505E-06	.6699E-14	.1335E-08	.1533E-07	.3084E-06	.1568E-06	.1357E-07	.2170E+00	.0000E+00	.5603E-01	.3743E+03	.2000E+03	-.210505114E+06	1.0
52	.1006E-04	.1000E+01	.1632E-07	.1433E-11	.8603E-07	.1922E-06	.8555E-14	.1705E-08	.1957E-07	.3939E-06	.2002E-06	.1733E-07	.0000E+00	.0000E+00	.4388E-01	.3930E+03	.2000E+03	-.268944462E+06	3.0
53	.0000E+00	.0000E+00	.0000E+00	.0000E+00	.0000E+00	.0000E+00	.0000E+00	.0000E+00	.0000E+00	.0000E+00	.0000E+00	.0000E+00	.1000E+01	.0000E+00	.1216E-01	.3930E+03	.2000E+03	0.227979945E+04	1.0
54	.1008E-04	.1000E+01	.1633E-07	.1434E-11	.8614E-07	.1924E-06	.8597E-14	.1707E-08	.1960E-07	.3949E-06	.2006E-06	.1735E-07	.0000E+00	.0000E+00	.4388E-01	.3070E+03	.2000E+03	-.272115137E+06	1.0
55	.1008E-04	.1000E+01	.1633E-07	.1434E-11	.8614E-07	.1924E-06	.8597E-14	.1707E-08	.1960E-07	.3949E-06	.2006E-06	.1735E-07	.0000E+00	.0000E+00	.4388E-01	.3080E+03	.2000E+03	-.272079329E+06	1.0
56	.4279E+00	.5323E+00	.7076E-03	.6416E-07	.3736E-02	.8302E-02	.3826E-09	.7349E-04	.8390E-03	.1681E-01	.8564E-02	.7444E-03	.0000E+00	.0000E+00	.3892E-02	.2841E+03	.1200E+03	-.153687969E+06	1.0
57	.6661E+00	.2720E+00	.1101E-02	.9988E-07	.5817E-02	.1292E-01	.5956E-09	.1144E-03	.1306E-02	.2618E-01	.1333E-01	.1159E-02	.0000E+00	.0000E+00	.1800E+00	.2830E+03	.1200E+03	-.876256497E+05	4.0
58	.6661E+00	.2720E+00	.1101E-02	.9988E-07	.5817E-02	.1292E-01	.5956E-09	.1144E-03	.1306E-02	.2618E-01	.1333E-01	.1159E-02	.0000E+00	.0000E+00	.4102E-01	.2830E+03	.1200E+03	-.876256497E+05	4.0
59	.6455E+00	.2945E+00	.1067E-02	.9678E-07	.5636E-02	.1252E-01	.5771E-09	.1109E-03	.1266E-02	.2536E-01	.1292E-01	.1123E-02	.0000E+00	.0000E+00	.4491E-01	.2831E+03	.1200E+03	-.933502121E+05	1.0
60	.6655E+00	.2720E+00	.1096E-06	.3696E-03	.5839E-02	.1285E-01	.5941E-06	.1138E-03	.1299E-02	.2603E-01	.1326E-01	.1153E-02	.1615E-02	.0000E+00	.1810E+00	.2834E+03	.1200E+03	-.875454466E+05	4.0
61	.6655E+00	.2720E+00	.1096E-06	.3696E-03	.5839E-02	.1285E-01	.5941E-06	.1138E-03	.1299E-02	.2603E-01	.1326E-01	.1153E-02	.1615E-02	.0000E+00	.1810E+00	.2834E+03	.5000E+04	-.875502942E+05	1.0
62	.6455E+00	.2945E+00	.1067E-02	.9678E-07	.5636E-02	.1252E-01	.5771E-09	.1109E-03	.1266E-02	.2536E-01	.1292E-01	.1123E-02	.0000E+00	.0000E+00	.4491E-01	.3911E+03	.1200E+03	-.589236834E+05	3.0
63	.6455E+00	.2945E+00	.1067E-02	.9678E-07	.5636E-02	.1252E-01	.5771E-09	.1109E-03	.1266E-02	.2536E-01	.1292E-01	.1123E-02	.0000E+00	.0000E+00	.4491E-01	.3940E+03	.1200E+03	-.573915468E+05	3.0
64	.4406E-08	.9819E+00	.3367E-02	.3543E-05	.0000E+00	.1298E-01	.0000E+00	.0000E+00	.0000E+00	.1194E-02	.4868E-03	.0000E+00	.0000E+00	.0000E+00	.9768E-04	.3774E+03	.1200E+03	-.229774674E+06	2.0
65	.8823E+00	.1100E+00	.4966E-07	.3879E-08	.7704E-02	.1683E-08	.0000E+00	.0000E+00	.0000E+00	.1794E-07	.1495E-06	.0000E+00	.0000E+00	.0000E+00	.3286E-01	.4253E+03	.1200E+03	0.151567322E+05	1.0
66	.2498E-06	.9998E+00	.3429E-04	.3608E-07	.0000E+00	.1322E-03	.0000E+00	.5287E-07	.7768E-06	.1216E-04	.4957E-05	.2063E-06	.0000E+00	.0000E+00	.9593E-02	.3080E+03	.1200E+03	-.272087523E+06	1.0
67	.2009E-09	.4628E-01	.1872E-01	.1648E-05	.0000E+00	.2197E+00	.0000E+00	.1944E-02	.2220E-01	.4449E+00	.2266E+00	.1970E-01	.0000E+00	.0000E+00	.2560E-02	.3080E+03	.1200E+03	-.155865329E+06	2.0
68	.2524E-06	.1000E+01	.0000E+00	.0000E+00	.0000E+00	.0000E+00	.0000E+00	.0000E+00	.0000E+00	.0000E+00	.0000E+00	.0000E+00	.0000E+00	.0000E+00	.9495E-02	.3780E+03	.1200E+03	-.269514574E+06	1.0
69	.1313E-03	.8324E-02	.3551E-02	.7579E-07	.0000E+00	.2707E+00	.1818E-05	.6806E-01	.1127E+00	.4493E+00	.7955E-01	.7701E-02	.0000E+00	.0000E+00	.6162E-01	.2844E+03	.1200E+03	-.164404415E+06	3.0
70	.1313E-03	.8324E-02	.3551E-02	.7579E-07	.0000E+00	.2707E+00	.1818E-05	.6806E-01	.1127E+00	.4493E+00	.7955E-01	.7701E-02	.0000E+00	.0000E+00	.6162E-01	.2982E+03	.6500E+03	-.162447425E+06	3.0
71	.5460E-02	.3057E+00	.1410E-02	.1512E-06	.0000E+00	.8780E-02	.2393E-07	.2015E-02	.2171E-01	.3543E+00	.2327E+00	.6799E-01	.0000E+00	.0000E+00	.1478E-02	.2930E+03	.6500E+03	-.162062224E+06	1.0
72	.3743E-06	.1015E-02	.3604E-02	.7394E-07	.0000E+00	.2772E+00	.1862E-05	.6968E-01	.1149E+00	.4517E+00	.7579E-01	.6220E-02	.0000E+00	.0000E+00	.6014E-01	.2930E+03	.6500E+03	-.163683276E+06	2.0
73	.3743E-06	.1015E-02	.3604E-02	.7394E-07	.0000E+00	.2772E+00	.1862E-05	.6968E-01	.1149E+00	.4517E+00	.7579E-01	.6220E-02	.0000E+00	.0000E+00	.6014E-01	.3032E+03	.2200E+04	-.161133622E+06	2.0
74	.3287E-05	.9383E-03	.2903E-02	.5837E-07	.0000E+00	.2386E+00	.1723E-04	.1781E+00	.1268E+00	.3854E+00	.6209E-01	.5202E-02	.0000E+00	.0000E+00	.7638E-01	.3158E+03	.2200E+04	-.147646276E+06	3.0
75	.8442E-06	.3035E-02	.1162E-01	.1499E-07	.0000E+00	.6536E-01	.4425E-05	.1207E+00	.1246E+00	.3208E+00	.2014E+00	.1523E+00	.0000E+00	.0000E+00	.2974E+00	.3069E+03	.2200E+04	-.117928803E+06	3.0
76	.8442E-06	.3035E-02	.1162E-01	.1499E-07	.0000E+00	.6536E-01	.4425E-05	.1207E+00	.1246E+00	.3208E+00	.2014E+00	.1523E+00	.0000E+00	.0000E+00	.2974E+00	.3341E+03	.2200E+04	-.110039049E+06	3.0
77	.8442E-06	.3035E-02	.1162E-01	.1499E-07	.0000E+00	.6536E-01	.4425E-05	.1207E+00	.1246E+00	.3208E+00	.2014E+00	.1523E+00	.0000E+00	.0000E+00	.2974E+00	.3340E+03	.2200E+04	-.110076858E+06	3.0
78	.0000E+00	.0000E+00	.1804E-01	.1381E-07	.0000E+00	.1015E+00	.6873E-05	.1875E+00	.1935E+00	.4933E+00	.6255E-02	.1022E-06	.0000E+00	.0000E+00	.1915E+00	.3125E+03	.2200E+04	-.102292033E+06	2.0
79	.2372E-05	.8530E-02	.1596E-05	.1715E-07	.0000E+00	.0000E+00	.0000E+00	.0000E+00	.2637E-06	.9012E-02	.5546E+00	.4279E+00	.0000E+00	.0000E+00	.1058E+00	.4203E+03	.2200E+04	-.100316452E+06	1.0
80	.2372E-05	.8530E-02	.1598E-05	.1715E-07	.0000E+00	.0000E+00	.0000E+00	.0000E+00	.2639E-06	.9017E-02	.5546E+00	.4279E+00	.0000E+00	.0000E+00	.1058E+00	.3239E+03	.2200E+04	-.122476765E+06	1.0
81	.8823E+00	.1100E+00	.4981E-07	.3888E-08	.7704E-02	.1689E-08	.0000E+00	.0000E+00	.0000E+00	.1800E-07	.1501E-06	.0000E+00	.0000E+00	.0000E+00	.1377E-01	.2930E+03	.2200E+04	-.317586968E+05	1.0
82	.6863E+00	.9240E-01	.0000E+00	.2152E+00	.5993E-02	.0000E+00	.1392E-03	.0000E+00	.0000E+00	.0000E+00	.0000E+00	.0000E+00	.0000E+00	.0000E+00	.9071E-02	.3080E+03	.2200E+04	-.913294545E+05	1.0
83	.1660E-04	.9126E-03	.5286E-08	.4775E-07	.0000E+00	.1002E+00	.1505E-04	.2086E+00	.2115E+00	.4739E+00	.4810E-02	.9846E-07	.0000E+00	.0000E+00	.1712E+00	.3080E+03	.2200E+04	-.103217932E+06	2.0
84	.3957E+00	.1196E+00	.2162E-02	.5918E-02	.1118E+00	.4890E-01	.3196E-07	.3804E-02	.1762E-01	.2865E+00	.8055E-02	.5853E-07	.0000E+00	.0000E+00	.4643E-01	.3307E+03	.2200E+04	-.759073097E+05	1.0
85	.6863E+00	.9240E-01	.0000E+00	.2152E+00	.5993E-02	.0000E+00	.1392E-03	.0000E+00	.0000E+00	.0000E+00	.0000E+00	.0000E+00	.0000E+00	.0000E+00	.9442E-02	.3080E+03	.2200E+04	-.913294545E+05	1.0
86	.4440E+00	.1166E+00	.1793E-06	.4031E-01	.3906E-01	.4056E-01	.2352E-04	.3156E-02	.1461E-01	.2376E+00	.6682E-02	.4855E-07	.5741E-01	.0000E+00	.5597E-01	.3263E+03	.2200E+04	-.783727246E+05	4.0
87	.4440E+00	.1166E+00	.1793E-06	.4031E-01	.3906E-01	.4056E-01	.2352E-04	.3156E-02	.1461E-01	.2376E+00	.6682E-02	.4855E-07	.5741E-01	.0000E+00	.5597E-01	.3263E+03	.5000E+04	-.783727246E+05	1.0

Appendix C.4

Column Profiles

The converged temperature, flow and composition profiles for all equilibrium-staged columns used in this simulation are given here.

Unit#	Description	Subroutine
6	SO_2 Absorber	Absorber w/o rxn.
21	Primary Absorber	Absorber w/rxn.
41	Solvent Stripper	Distillation
42	Sour-Water Stripper	Distillation
51	Depropanizer	Distillation
54	Secondary Absorber	Absorber w/rxn.

UNIT 6: SULFUR DIOXIDE ABSORBER

INPUT PARAMETERS: K2= .0 VTRAY= .0000 RHOL= .00
QR= 0.00000E+00 TC= .00 FS= .000

				ABSORBER OUTPUT DATA		
F(FLOW)= 0.19762E-01	F(TEMP)= 423.00	F(ENTHALPY)= -0.48623E+05		T= 334.98	V=0.2044E-01	L=0.1928E-01
F(FLOW)= 0.00000E+00	F(TEMP)= .00	F(ENTHALPY)= 0.00000E+00		T= 329.42	V=0.1934E-01	L=0.1996E-01
F(FLOW)= 0.00000E+00	F(TEMP)= .00	F(ENTHALPY)= 0.00000E+00		T= 321.53	V=0.1765E-01	L=0.1886E-01
F(FLOW)= 0.00000E+00	F(TEMP)= .00	F(ENTHALPY)= 0.00000E+00		T= 309.14	V=0.1635E-01	L=0.1718E-01
F(FLOW)= 0.00000E+00	F(TEMP)= .00	F(ENTHALPY)= 0.00000E+00		T= 298.82	V=0.1587E-01	L=0.1587E-01
F(FLOW)= 0.00000E+00	F(TEMP)= .00	F(ENTHALPY)= 0.00000E+00		T= 294.46	V=0.1576E-01	L=0.1539E-01
F(FLOW)= 0.00000E+00	F(TEMP)= .00	F(ENTHALPY)= 0.00000E+00		T= 293.29	V=0.1573E-01	L=0.1528E-01
F(FLOW)= 0.00000E+00	F(TEMP)= .00	F(ENTHALPY)= 0.00000E+00		T= 293.04	V=0.1573E-01	L=0.1526E-01
F(FLOW)= 0.00000E+00	F(TEMP)= .00	F(ENTHALPY)= 0.00000E+00		T= 292.99	V=0.1573E-01	L=0.1525E-01
F(FLOW)= 0.15000E-01	F(TEMP)= 293.00	F(ENTHALPY)= -0.31759E+05		T= 292.98	V=0.1573E-01	L=0.1525E-01
F(FLOW)= 0.00000E+00	F(TEMP)= .00	F(ENTHALPY)= 0.00000E+00		T= 285.06	V=0.1582E-01	L=0.2491E-03
F(FLOW)= 0.00000E+00	F(TEMP)= .00	F(ENTHALPY)= 0.00000E+00		T= 284.87	V=0.1582E-01	L=0.3436E-03
F(FLOW)= 0.35000E-03	F(TEMP)= 308.00	F(ENTHALPY)= -0.27208E+06		T= 285.14	V=0.1583E-01	L=0.3460E-03

LIQUID COMPONENT MOLE FRACTIONS

SG#	SOLV	H2O	H2S	SO2	SULD	CO2	N2	C1	H2	CO	C2	C3	C4
1	.6863E+00	.9240E-01	.0000E+00	.2152E+00	.5993E-02	.0000E+00	.1392E-03	.0000E+00	.0000E+00	.0000E+00	.0000E+00	.0000E+00	.0000E+00
2	.6655E+00	.1320E+00	.0000E+00	.1965E+00	.5790E-02	.0000E+00	.1499E-03	.0000E+00	.0000E+00	.0000E+00	.0000E+00	.0000E+00	.0000E+00
3	.7035E+00	.1416E+00	.0000E+00	.1486E+00	.6127E-02	.0000E+00	.1726E-03	.0000E+00	.0000E+00	.0000E+00	.0000E+00	.0000E+00	.0000E+00
4	.7719E+00	.1391E+00	.0000E+00	.8207E-01	.6729E-02	.0000E+00	.2038E-03	.0000E+00	.0000E+00	.0000E+00	.0000E+00	.0000E+00	.0000E+00
5	.8346E+00	.1315E+00	.0000E+00	.2647E-01	.7281E-02	.0000E+00	.2277E-03	.0000E+00	.0000E+00	.0000E+00	.0000E+00	.0000E+00	.0000E+00
6	.8606E+00	.1264E+00	.0000E+00	.5255E-02	.7510E-02	.0000E+00	.2377E-03	.0000E+00	.0000E+00	.0000E+00	.0000E+00	.0000E+00	.0000E+00
7	.8667E+00	.1247E+00	.0000E+00	.8402E-03	.7564E-02	.0000E+00	.2403E-03	.0000E+00	.0000E+00	.0000E+00	.0000E+00	.0000E+00	.0000E+00
8	.8678E+00	.1242E+00	.0000E+00	.1263E-03	.7574E-02	.0000E+00	.2409E-03	.0000E+00	.0000E+00	.0000E+00	.0000E+00	.0000E+00	.0000E+00
9	.8680E+00	.1241E+00	.2961E-08	.1846E-04	.7576E-02	.0000E+00	.2410E-03	.0000E+00	.0000E+00	.0000E+00	.0000E+00	.0000E+00	.2639E-08
10	.8681E+00	.1241E+00	.1205E-07	.2391E-05	.7577E-02	.0000E+00	.2410E-03	.0000E+00	.0000E+00	.0000E+00	.0000E+00	.0000E+00	.1974E-07
11	.2440E-01	.9756E+00	.0000E+00	.4919E-07	.0000E+00	.0000E+00	.2839E-04	.0000E+00	.0000E+00	.0000E+00	.0000E+00	.0000E+00	.0000E+00
12	.3273E-03	.9997E+00	.0000E+00	.1325E-07	.0000E+00	.0000E+00	.1447E-04	.0000E+00	.0000E+00	.0000E+00	.0000E+00	.0000E+00	.0000E+00
13	.4259E-05	.1000E+01	.0000E+00	.1282E-07	.0000E+00	.0000E+00	.1425E-04	.0000E+00	.0000E+00	.0000E+00	.0000E+00	.0000E+00	.0000E+00

VAPOR COMPONENT MOLE FRACTIONS

SG#	SOLV	H2O	H2S	SO2	SULD	CO2	N2	C1	H2	CO	C2	C3	C4
1	.2430E-02	.4179E-01	.0000E+00	.1919E+00	.0000E+00	.0000E+00	.7639E+00	.0000E+00	.0000E+00	.0000E+00	.0000E+00	.0000E+00	.0000E+00
2	.1819E-02	.4597E-01	.0000E+00	.1449E+00	.0000E+00	.0000E+00	.8073E+00	.0000E+00	.0000E+00	.0000E+00	.0000E+00	.0000E+00	.0000E+00
3	.1321E-02	.3441E-01	.0000E+00	.7985E-01	.0000E+00	.0000E+00	.8844E+00	.0000E+00	.0000E+00	.0000E+00	.0000E+00	.0000E+00	.0000E+00
4	.7892E-03	.1864E-01	.0000E+00	.2570E-01	.0000E+00	.0000E+00	.9549E+00	.0000E+00	.0000E+00	.0000E+00	.0000E+00	.0000E+00	.0000E+00
5	.5045E-03	.1032E-01	.0000E+00	.5097E-02	.0000E+00	.0000E+00	.9841E+00	.0000E+00	.0000E+00	.0000E+00	.0000E+00	.0000E+00	.0000E+00
6	.4142E-03	.7822E-02	.0000E+00	.8151E-03	.0000E+00	.0000E+00	.9909E+00	.0000E+00	.0000E+00	.0000E+00	.0000E+00	.0000E+00	.0000E+00
7	.3923E-03	.7230E-02	.0000E+00	.1228E-03	.0000E+00	.0000E+00	.9923E+00	.0000E+00	.0000E+00	.0000E+00	.0000E+00	.0000E+00	.0000E+00
8	.3877E-03	.7104E-02	.0000E+00	.1824E-04	.0000E+00	.0000E+00	.9925E+00	.0000E+00	.0000E+00	.0000E+00	.0000E+00	.0000E+00	.0000E+00
9	.3868E-03	.7079E-02	.1168E-07	.2658E-05	.0000E+00	.0000E+00	.9925E+00	.0000E+00	.0000E+00	.0000E+00	.0000E+00	.0000E+00	.1914E-07
10	.3866E-03	.7074E-02	.4752E-07	.3441E-06	.0000E+00	.0000E+00	.9925E+00	.0000E+00	.0000E+00	.0000E+00	.0000E+00	.0000E+00	.1432E-06
11	.7110E-05	.1338E-01	.0000E+00	.3416E-06	.0000E+00	.0000E+00	.9866E+00	.0000E+00	.0000E+00	.0000E+00	.0000E+00	.0000E+00	.0000E+00
12	.9437E-07	.1354E-01	.0000E+00	.3415E-06	.0000E+00	.0000E+00	.9865E+00	.0000E+00	.0000E+00	.0000E+00	.0000E+00	.0000E+00	.0000E+00
13	.1246E-08	.1379E-01	.0000E+00	.3412E-06	.0000E+00	.0000E+00	.9862E+00	.0000E+00	.0000E+00	.0000E+00	.0000E+00	.0000E+00	.0000E+00

LIQUID COMPONENT FLOWS

SG#	SOLV	H2O	H2S	SO2	SULD	CO2	N2	C1	H2	CO	C2	C3	C4
1	.1323E-01	.1782E-02	.0000E+00	.4150E-02	.1156E-03	.0000E+00	.2685E-05	.0000E+00	.0000E+00	.0000E+00	.0000E+00	.0000E+00	.0000E+00
2	.1328E-01	.2636E-02	.0000E+00	.3922E-02	.1156E-03	.0000E+00	.2992E-05	.0000E+00	.0000E+00	.0000E+00	.0000E+00	.0000E+00	.0000E+00
3	.1327E-01	.2671E-02	.0000E+00	.2803E-02	.1156E-03	.0000E+00	.3255E-05	.0000E+00	.0000E+00	.0000E+00	.0000E+00	.0000E+00	.0000E+00
4	.1326E-01	.2389E-02	.0000E+00	.1410E-02	.1156E-03	.0000E+00	.3500E-05	.0000E+00	.0000E+00	.0000E+00	.0000E+00	.0000E+00	.0000E+00
5	.1325E-01	.2087E-02	.0000E+00	.4202E-03	.1156E-03	.0000E+00	.3614E-05	.0000E+00	.0000E+00	.0000E+00	.0000E+00	.0000E+00	.0000E+00
6	.1324E-01	.1946E-02	.0000E+00	.8087E-04	.1156E-03	.0000E+00	.3657E-05	.0000E+00	.0000E+00	.0000E+00	.0000E+00	.0000E+00	.0000E+00
7	.1324E-01	.1905E-02	.0000E+00	.1284E-04	.1156E-03	.0000E+00	.3672E-05	.0000E+00	.0000E+00	.0000E+00	.0000E+00	.0000E+00	.0000E+00
8	.1324E-01	.1896E-02	.0000E+00	.1928E-05	.1156E-03	.0000E+00	.3676E-05	.0000E+00	.0000E+00	.0000E+00	.0000E+00	.0000E+00	.0000E+00
9	.1324E-01	.1894E-02	.4516E-10	.2816E-06	.1156E-03	.0000E+00	.3676E-05	.0000E+00	.0000E+00	.0000E+00	.0000E+00	.0000E+00	.4026E-10
10	.1324E-01	.1893E-02	.1837E-09	.3647E-07	.1156E-03	.0000E+00	.3677E-05	.0000E+00	.0000E+00	.0000E+00	.0000E+00	.0000E+00	.3011E-09
11	.6080E-05	.2431E-03	.0000E+00	.1226E-10	.0000E+00	.0000E+00	.7074E-08	.0000E+00	.0000E+00	.0000E+00	.0000E+00	.0000E+00	.0000E+00
12	.1125E-06	.3435E-03	.0000E+00	.4554E-11	.0000E+00	.0000E+00	.4973E-08	.0000E+00	.0000E+00	.0000E+00	.0000E+00	.0000E+00	.0000E+00
13	.1473E-08	.3460E-03	.0000E+00	.4437E-11	.0000E+00	.0000E+00	.4931E-08	.0000E+00	.0000E+00	.0000E+00	.0000E+00	.0000E+00	.0000E+00

VAPOR COMPONENT FLOWS

SG#	SOLV	H2O	H2S	SO2	SULD	CO2	N2	C1	H2	CO	C2	C3	C4
1	.4967E-04	.8540E-03	.0000E+00	.3922E-02	.0000E+00	.0000E+00	.1561E-01	.0000E+00	.0000E+00	.0000E+00	.0000E+00	.0000E+00	.0000E+00
2	.3519E-04	.8891E-03	.0000E+00	.2803E-02	.0000E+00	.0000E+00	.1561E-01	.0000E+00	.0000E+00	.0000E+00	.0000E+00	.0000E+00	.0000E+00
3	.2332E-04	.6074E-03	.0000E+00	.1410E-02	.0000E+00	.0000E+00	.1561E-01	.0000E+00	.0000E+00	.0000E+00	.0000E+00	.0000E+00	.0000E+00
4	.1290E-04	.3048E-03	.0000E+00	.4202E-03	.0000E+00	.0000E+00	.1561E-01	.0000E+00	.0000E+00	.0000E+00	.0000E+00	.0000E+00	.0000E+00
5	.8003E-05	.1637E-03	.0000E+00	.8087E-04	.0000E+00	.0000E+00	.1561E-01	.0000E+00	.0000E+00	.0000E+00	.0000E+00	.0000E+00	.0000E+00
6	.6526E-05	.1232E-03	.0000E+00	.1284E-04	.0000E+00	.0000E+00	.1561E-01	.0000E+00	.0000E+00	.0000E+00	.0000E+00	.0000E+00	.0000E+00
7	.6173E-05	.1138E-03	.0000E+00	.1933E-05	.0000E+00	.0000E+00	.1561E-01	.0000E+00	.0000E+00	.0000E+00	.0000E+00	.0000E+00	.0000E+00
8	.6098E-05	.1118E-03	.0000E+00	.2869E-06	.0000E+00	.0000E+00	.1561E-01	.0000E+00	.0000E+00	.0000E+00	.0000E+00	.0000E+00	.0000E+00
9	.6084E-05	.1114E-03	.1837E-09	.4181E-07	.0000E+00	.0000E+00	.1561E-01	.0000E+00	.0000E+00	.0000E+00	.0000E+00	.0000E+00	.3011E-09
10	.6080E-05	.1112E-03	.7473E-09	.5412E-08	.0000E+00	.0000E+00	.1561E-01	.0000E+00	.0000E+00	.0000E+00	.0000E+00	.0000E+00	.2251E-08
11	.1125E-06	.2117E-03	.0000E+00	.5404E-08	.0000E+00	.0000E+00	.1561E-01	.0000E+00	.0000E+00	.0000E+00	.0000E+00	.0000E+00	.0000E+00
12	.1493E-08	.2142E-03	.0000E+00	.5404E-08	.0000E+00	.0000E+00	.1561E-01	.0000E+00	.0000E+00	.0000E+00	.0000E+00	.0000E+00	.0000E+00
13	.1972E-10	.2182E-03	.0000E+00	.5400E-08	.0000E+00	.0000E+00	.1561E-01	.0000E+00	.0000E+00	.0000E+00	.0000E+00	.0000E+00	.0000E+00

```
% SULFUR SATURATION ON TRAY    1 =    0.1072450798E+02 (SOLMAX=    0.5587845234E-01)
% SULFUR SATURATION ON TRAY    2 =    0.1268618990E+02 (SOLMAX=    0.4563705623E-01)
% SULFUR SATURATION ON TRAY    3 =    0.1817830886E+02 (SOLMAX=    0.3370359905E-01)
% SULFUR SATURATION ON TRAY    4 =    0.3331701009E+02 (SOLMAX=    0.2019547530E-01)
% SULFUR SATURATION ON TRAY    5 =    0.5730217255E+02 (SOLMAX=    0.1270549610E-01)
% SULFUR SATURATION ON TRAY    6 =    0.7267040572E+02 (SOLMAX=    0.1033449362E-01)
% SULFUR SATURATION ON TRAY    7 =    0.7743262598E+02 (SOLMAX=    0.9768703646E-02)
% SULFUR SATURATION ON TRAY    8 =    0.7848787875E+02 (SOLMAX=    0.9650461404E-02)
% SULFUR SATURATION ON TRAY    9 =    0.7869444489E+02 (SOLMAX=    0.9627487133E-02)
% SULFUR SATURATION ON TRAY   10 =    0.7873279331E+02 (SOLMAX=    0.9623214869E-02)
% SULFUR SATURATION ON TRAY   11 =    0.0000000000E+00 (SOLMAX=    0.6475249693E-02)
% SULFUR SATURATION ON TRAY   12 =    0.0000000000E+00 (SOLMAX=    0.6411083988E-02)
% SULFUR SATURATION ON TRAY   13 =    0.0000000000E+00 (SOLMAX=    0.6500499384E-02)
```

UNIT 21: PRIMARY ABSORBER

INPUT PARAMETERS: K2= 100.0 VTRAY= .2000 RHOL= 4.56
QR= 0.00000E+00 TC= .00 FS= .000

				ABSORBER OUTPUT DATA		
F(FLOW)= 0.11640E+01	F(TEMP)= 283.00	F(ENTHALPY)= -0.77883E+05		T= 289.63	V=0.1153E+01	L=0.2490E+00
F(FLOW)= 0.00000E+00	F(TEMP)= .00	F(ENTHALPY)= 0.00000E+00		T= 292.82	V=0.1148E+01	L=0.2378E+00
F(FLOW)= 0.00000E+00	F(TEMP)= .00	F(ENTHALPY)= 0.00000E+00		T= 294.61	V=0.1145E+01	L=0.2330E+00
F(FLOW)= 0.00000E+00	F(TEMP)= .00	F(ENTHALPY)= 0.00000E+00		T= 295.63	V=0.1144E+01	L=0.2304E+00
F(FLOW)= 0.00000E+00	F(TEMP)= .00	F(ENTHALPY)= 0.00000E+00		T= 296.09	V=0.1141E+01	L=0.2285E+00
F(FLOW)= 0.00000E+00	F(TEMP)= .00	F(ENTHALPY)= 0.00000E+00		T= 295.92	V=0.1136E+01	L=0.2262E+00
F(FLOW)= 0.18097E+00	F(TEMP)= 283.41	F(ENTHALPY)= -0.87551E+05		T= 294.28	V=0.1101E+01	L=0.2208E+00
F(FLOW)= 0.00000E+00	F(TEMP)= .00	F(ENTHALPY)= 0.00000E+00		T= 294.39	V=0.1101E+01	L=0.5515E-02
F(FLOW)= 0.00000E+00	F(TEMP)= .00	F(ENTHALPY)= 0.00000E+00		T= 294.41	V=0.1101E+01	L=0.5374E-02
F(FLOW)= 0.41000E-02	F(TEMP)= 283.00	F(ENTHALPY)= -0.35304E+05		T= 294.43	V=0.1100E+01	L=0.5337E-02

LIQUID COMPONENT MOLE FRACTIONS

SG#	SOLV	H2O	H2S	SO2	SULD	CO2	N2	C1	H2	CO	C2	C3	C4	C5+
1	.4981E+00	.1996E+00	.1985E-01	.6703E-07	.5175E-02	.7341E-01	.0000E+00	.5401E-01	.0000E+00	.0000E+00	.3655E-01	.8370E-01	.2718E-01	.2433E-02
2	.5215E+00	.2097E+00	.6301E-02	.2397E-05	.5412E-02	.6814E-01	.0000E+00	.5198E-01	.0000E+00	.0000E+00	.3414E-01	.7859E-01	.2211E-01	.2016E-02
3	.5324E+00	.2142E+00	.1905E-02	.2944E-04	.5443E-02	.6535E-01	.0000E+00	.5090E-01	.0000E+00	.0000E+00	.3289E-01	.7582E-01	.1923E-01	.1809E-02
4	.5385E+00	.2166E+00	.4570E-03	.1315E-03	.5202E-02	.6359E-01	.0000E+00	.5033E-01	.0000E+00	.0000E+00	.3222E-01	.7399E-01	.1728E-01	.1687E-02
5	.5429E+00	.2183E+00	.9036E-04	.2437E-03	.4916E-02	.6194E-01	.0000E+00	.5012E-01	.0000E+00	.0000E+00	.3197E-01	.7215E-01	.1578E-01	.1599E-02
6	.5484E+00	.2204E+00	.1675E-04	.2887E-03	.4845E-02	.5878E-01	.0000E+00	.5042E-01	.0000E+00	.0000E+00	.3216E-01	.6864E-01	.1449E-01	.1510E-02
7	.5618E+00	.2258E+00	.2906E-05	.3056E-03	.4935E-02	.4924E-01	.1236E-08	.5225E-01	.0000E+00	.0000E+00	.3206E-01	.5895E-01	.1335E-01	.1378E-02
8	.6557E+00	.1099E+00	.1189E-05	.1617E-03	.5786E-02	.5278E-01	.1303E-08	.5592E-01	.0000E+00	.0000E+00	.3526E-01	.6723E-01	.1558E-01	.1620E-02
9	.6731E+00	.8920E-01	.6723E-06	.7586E-04	.5893E-02	.5333E-01	.1314E-08	.5650E-01	.0000E+00	.0000E+00	.3577E-01	.6858E-01	.1593E-01	.1660E-02
10	.6778E+00	.8535E-01	.5014E-06	.2773E-04	.5922E-02	.5300E-01	.1317E-08	.5664E-01	.0000E+00	.0000E+00	.3583E-01	.6818E-01	.1556E-01	.1636E-02

VAPOR COMPONENT MOLE FRACTIONS

SG#	SOLV	H2O	H2S	SO2	SULD	CO2	N2	C1	H2	CO	C2	C3	C4	C5+
1	.3713E-05	.1567E-03	.1415E-02	.1706E-09	.0000E+00	.3920E-01	.0000E+00	.8207E+00	.0000E+00	.0000E+00	.9123E-01	.4182E-01	.4922E-02	.6045E-03
2	.4606E-05	.1980E-03	.4911E-03	.7173E-08	.0000E+00	.3851E-01	.0000E+00	.8237E+00	.0000E+00	.0000E+00	.9121E-01	.4110E-01	.4264E-02	.5565E-03
3	.5167E-05	.2238E-03	.1559E-03	.9631E-07	.0000E+00	.3809E-01	.0000E+00	.8253E+00	.0000E+00	.0000E+00	.9121E-01	.4065E-01	.3837E-02	.5291E-03
4	.5512E-05	.2396E-03	.3844E-04	.4522E-06	.0000E+00	.3772E-01	.0000E+00	.8265E+00	.0000E+00	.0000E+00	.9125E-01	.4023E-01	.3515E-02	.5095E-03
5	.5693E-05	.2478E-03	.7696E-05	.8573E-06	.0000E+00	.3704E-01	.0000E+00	.8281E+00	.0000E+00	.0000E+00	.9141E-01	.3947E-01	.3235E-02	.4897E-03
6	.5699E-05	.2482E-03	.1422E-05	.1008E-05	.0000E+00	.3508E-01	.0000E+00	.8321E+00	.0000E+00	.0000E+00	.9167E-01	.3745E-01	.2960E-02	.4591E-03
7	.5358E-05	.2332E-03	.2369E-06	.9866E-06	.0000E+00	.2869E-01	.9763E-07	.8481E+00	.0000E+00	.0000E+00	.8851E-01	.3142E-01	.2633E-02	.3949E-03
8	.6289E-05	.1181E-03	.8907E-07	.4747E-06	.0000E+00	.2869E-01	.9764E-07	.8482E+00	.0000E+00	.0000E+00	.8852E-01	.3142E-01	.2633E-02	.3950E-03
9	.6463E-05	.9644E-04	.4971E-07	.2196E-06	.0000E+00	.2869E-01	.9764E-07	.8482E+00	.0000E+00	.0000E+00	.8852E-01	.3142E-01	.2631E-02	.3948E-03
10	.6515E-05	.9247E-04	.3700E-07	.8011E-07	.0000E+00	.2846E-01	.9775E-07	.8489E+00	.0000E+00	.0000E+00	.8845E-01	.3112E-01	.2559E-02	.3873E-03

LIQUID COMPONENT FLOWS

SG#	SOLV	H2O	H2S	SO2	SULD	CO2	N2	C1	H2	CO	C2	C3	C4	C5+
1	.1240E+00	.4971E-01	.4943E-02	.1669E-07	.1289E-02	.1828E-01	.0000E+00	.1345E-01	.0000E+00	.0000E+00	.9102E-02	.2084E-01	.6768E-02	.6059E-03
2	.1240E+00	.4989E-01	.1499E-02	.5701E-06	.1287E-02	.1621E-01	.0000E+00	.1236E-01	.0000E+00	.0000E+00	.8119E-02	.1869E-01	.5260E-02	.4795E-03
3	.1240E+00	.4992E-01	.4438E-03	.6860E-05	.1268E-02	.1523E-01	.0000E+00	.1186E-01	.0000E+00	.0000E+00	.7662E-02	.1767E-01	.4481E-02	.4215E-03
4	.1240E+00	.4990E-01	.1053E-03	.3029E-04	.1198E-02	.1465E-01	.0000E+00	.1159E-01	.0000E+00	.0000E+00	.7422E-02	.1705E-01	.3981E-02	.3886E-03
5	.1240E+00	.4987E-01	.2065E-04	.5568E-04	.1123E-02	.1415E-01	.0000E+00	.1145E-01	.0000E+00	.0000E+00	.7305E-02	.1649E-01	.3605E-02	.3653E-03
6	.1240E+00	.4986E-01	.3789E-05	.6530E-04	.1096E-02	.1330E-01	.0000E+00	.1140E-01	.0000E+00	.0000E+00	.7274E-02	.1552E-01	.3278E-02	.3415E-03
7	.1240E+00	.4986E-01	.6417E-06	.6748E-04	.1090E-02	.1087E-01	.2730E-09	.1154E-01	.0000E+00	.0000E+00	.7080E-02	.1302E-01	.2947E-02	.3042E-03
8	.3616E-02	.6063E-03	.6559E-08	.8916E-06	.3191E-04	.2911E-03	.7188E-11	.3084E-03	.0000E+00	.0000E+00	.1944E-03	.3707E-03	.8589E-04	.8935E-05
9	.3617E-02	.4794E-03	.3613E-08	.4077E-06	.3167E-04	.2866E-03	.7062E-11	.3037E-03	.0000E+00	.0000E+00	.1922E-03	.3686E-03	.8562E-04	.8921E-05
10	.3617E-02	.4555E-03	.2676E-08	.1480E-06	.3161E-04	.2828E-03	.7028E-11	.3023E-03	.0000E+00	.0000E+00	.1912E-03	.3639E-03	.8304E-04	.8730E-05

VAPOR COMPONENT FLOWS

SG#	SOLV	H2O	H2S	SO2	SULD	CO2	N2	C1	H2	CO	C2	C3	C4	C5+
1	.4281E-05	.1807E-03	.1631E-02	.1966E-09	.0000E+00	.4519E-01	.0000E+00	.9461E+00	.0000E+00	.0000E+00	.1052E+00	.4821E-01	.5674E-02	.6969E-03
2	.5288E-05	.2273E-03	.5638E-03	.8235E-08	.0000E+00	.4421E-01	.0000E+00	.9456E+00	.0000E+00	.0000E+00	.1047E+00	.4719E-01	.4895E-02	.6389E-03
3	.5918E-05	.2563E-03	.1786E-03	.1103E-06	.0000E+00	.4363E-01	.0000E+00	.9454E+00	.0000E+00	.0000E+00	.1045E+00	.4657E-01	.4395E-02	.6060E-03
4	.6304E-05	.2740E-03	.4396E-04	.5171E-06	.0000E+00	.4314E-01	.0000E+00	.9452E+00	.0000E+00	.0000E+00	.1044E+00	.4601E-01	.4020E-02	.5827E-03
5	.6497E-05	.2828E-03	.8784E-05	.9785E-06	.0000E+00	.4228E-01	.0000E+00	.9452E+00	.0000E+00	.0000E+00	.1043E+00	.4505E-01	.3693E-02	.5589E-03
6	.6474E-05	.2820E-03	.1615E-05	.1145E-05	.0000E+00	.3986E-01	.0000E+00	.9453E+00	.0000E+00	.0000E+00	.1041E+00	.4254E-01	.3362E-02	.5216E-03
7	.5901E-05	.2568E-03	.2610E-06	.1087E-05	.0000E+00	.3160E-01	.1075E-06	.9341E+00	.0000E+00	.0000E+00	.9748E-01	.3460E-01	.2900E-02	.4350E-03
8	.6926E-05	.1301E-03	.9809E-07	.5228E-06	.0000E+00	.3160E-01	.1075E-06	.9341E+00	.0000E+00	.0000E+00	.9748E-01	.3460E-01	.2900E-02	.4349E-03
9	.7117E-05	.1062E-03	.5474E-07	.2419E-06	.0000E+00	.3159E-01	.1075E-06	.9341E+00	.0000E+00	.0000E+00	.9748E-01	.3460E-01	.2897E-02	.4348E-03
10	.7166E-05	.1017E-03	.4070E-07	.8812E-07	.0000E+00	.3131E-01	.1075E-06	.9338E+00	.0000E+00	.0000E+00	.9729E-01	.3423E-01	.2814E-02	.4260E-03

```
% SULFUR SATURATION ON TRAY    1 =    0.6341025693E+02 (SOLMAX=    0.8161210093E-02)
% SULFUR SATURATION ON TRAY    2 =    0.5667373078E+02 (SOLMAX=    0.9548722494E-02)
% SULFUR SATURATION ON TRAY    3 =    0.5228124410E+02 (SOLMAX=    0.1041112119E-01)
% SULFUR SATURATION ON TRAY    4 =    0.4759153374E+02 (SOLMAX=    0.1092991217E-01)
% SULFUR SATURATION ON TRAY    5 =    0.4400932499E+02 (SOLMAX=    0.1117129499E-01)
% SULFUR SATURATION ON TRAY    6 =    0.4372199777E+02 (SOLMAX=    0.1108077003E-01)
% SULFUR SATURATION ON TRAY    7 =    0.4816507104E+02 (SOLMAX=    0.1024653661E-01)
% SULFUR SATURATION ON TRAY    8 =    0.5618057380E+02 (SOLMAX=    0.1029919008E-01)
% SULFUR SATURATION ON TRAY    9 =    0.5714986483E+02 (SOLMAX=    0.1031095373E-01)
% SULFUR SATURATION ON TRAY   10 =    0.5739614184E+02 (SOLMAX=    0.1031852517E-01)
```

UNIT 41: SOLVENT STRIPPER

ABSORBER OUTPUT DATA

F(FLOW)= 0.00000E+00	F(TEMP)= .00	F(ENTHALPY)= 0.00000E+00	T= 425.28	V=0.9516E-02	L=0.3286E-01	HV =-.1898E+06	HL=0.1516E+05
F(FLOW)= 0.00000E+00	F(TEMP)= .00	F(ENTHALPY)= 0.00000E+00	T= 399.22	V=0.1004E-01	L=0.4237E-01	HV =-.2171E+06	HL=-.4850E+05
F(FLOW)= 0.00000E+00	F(TEMP)= .00	F(ENTHALPY)= 0.00000E+00	T= 397.33	V=0.9998E-02	L=0.4290E-01	HV =-.2182E+06	HL=-.5663E+05
F(FLOW)= 0.00000E+00	F(TEMP)= .00	F(ENTHALPY)= 0.00000E+00	T= 396.98	V=0.9050E-02	L=0.4286E-01	HV =-.2171E+06	HL=-.5672E+05
F(FLOW)= 0.44913E-01	F(TEMP)= 394.00	F(ENTHALPY)= -0.57392E+05	T= 393.46	V=0.1665E-01	L=0.4191E-01	HV =-.2068E+06	HL=-.5283E+05
F(FLOW)= 0.00000E+00	F(TEMP)= .00	F(ENTHALPY)= 0.00000E+00	T= 376.29	V=0.1744E-01	L=0.4596E-02	HV =-.2163E+06	HL=-.2425E+06
F(FLOW)= 0.00000E+00	F(TEMP)= .00	F(ENTHALPY)= 0.00000E+00	T= 373.83	V=0.1752E-01	L=0.5384E-02	HV =-.2170E+06	HL=-.2681E+06
F(FLOW)= 0.00000E+00	F(TEMP)= .00	F(ENTHALPY)= 0.00000E+00	T= 373.70	V=0.1752E-01	L=0.5464E-02	HV =-.2170E+06	HL=-.2696E+06
F(FLOW)= 0.00000E+00	F(TEMP)= .00	F(ENTHALPY)= 0.00000E+00	T= 373.61	V=0.1722E-01	L=0.5468E-02	HV =-.2168E+06	HL=-.2697E+06
F(FLOW)= 0.97650E-04	F(TEMP)= 377.44	F(ENTHALPY)= -0.22977E+06	T= 308.00	V=0.2560E-02	L=0.5165E-02	HV =-.1559E+06	HL=-.2721E+06

LIQUID COMPONENT MOLE FRACTIONS

SG#	SOLV	H2O	H2S	SO2	SULD	CO2	N2	C1	H2	CO	C2	C3	C4	C5+
1	.8823E+00	.1100E+00	.4966E-07	.3879E-08	.7704E-02	.1683E-08	.0000E+00	.0000E+00	.0000E+00	.0000E+00	.0000E+00	.1794E-07	.1495E-06	.0000E+00
2	.7077E+00	.2863E+00	.4371E-06	.1268E-07	.5974E-02	.4046E-07	.0000E+00	.0000E+00	.0000E+00	.0000E+00	.0000E+00	.2871E-06	.1483E-05	.0000E+00
3	.6831E+00	.3109E+00	.2897E-05	.2172E-07	.5901E-02	.8799E-06	.0000E+00	.0000E+00	.0000E+00	.0000E+00	.0000E+00	.4524E-05	.1323E-04	.1856E-07
4	.6831E+00	.3108E+00	.1874E-04	.3387E-07	.5907E-02	.1907E-04	.0000E+00	.0000E+00	.0000E+00	.0000E+00	.4944E-07	.7201E-04	.1183E-03	.6635E-06
5	.6978E+00	.2936E+00	.1115E-03	.4724E-07	.6041E-02	.3812E-03	.0000E+00	.1696E-06	.0000E+00	.0000E+00	.6203E-05	.1058E-02	.9751E-03	.2180E-04
6	.9006E-01	.9098E+00	.2005E-04	.1162E-07	.0000E+00	.6541E-04	.0000E+00	.3292E-07	.0000E+00	.0000E+00	.7364E-06	.3891E-04	.2474E-04	.8538E-06
7	.5209E-02	.9948E+00	.2156E-05	.1412E-08	.0000E+00	.7483E-05	.0000E+00	.4529E-08	.0000E+00	.0000E+00	.5176E-07	.7461E-06	.2860E-06	.1380E-07
8	.2690E-03	.9997E+00	.1656E-05	.1098E-08	.0000E+00	.5796E-05	.0000E+00	.3586E-08	.0000E+00	.0000E+00	.3785E-07	.4688E-06	.1692E-06	.8483E-08
9	.1339E-04	.1000E+01	.1669E-05	.1151E-08	.0000E+00	.5830E-05	.0000E+00	.3606E-08	.0000E+00	.0000E+00	.3791E-07	.4657E-06	.1676E-06	.8416E-08
10	.2498E-06	.9998E+00	.3429E-04	.3608E-07	.0000E+00	.1322E-03	.0000E+00	.5287E-07	.0000E+00	.0000E+00	.7768E-06	.1216E-04	.4957E-05	.2063E-06

VAPOR COMPONENT MOLE FRACTIONS

SG#	SOLV	H2O	H2S	SO2	SULD	CO2	N2	C1	H2	CO	C2	C3	C4	C5+
1	.1048E+00	.8952E+00	.1775E-05	.4309E-07	.0000E+00	.1743E-06	.0000E+00	.0000E+00	.0000E+00	.0000E+00	.0000E+00	.1217E-05	.6086E-05	.0000E+00
2	.3157E-01	.9683E+00	.1221E-04	.8008E-07	.0000E+00	.3753E-05	.0000E+00	.0000E+00	.0000E+00	.0000E+00	.0000E+00	.1927E-04	.5602E-04	.0000E+00
3	.2832E-01	.9707E+00	.8017E-04	.1324E-06	.0000E+00	.8172E-04	.0000E+00	.0000E+00	.0000E+00	.0000E+00	.0000E+00	.3086E-03	.5067E-03	.2844E-05
4	.2793E-01	.9603E+00	.5161E-03	.2047E-06	.0000E+00	.1765E-02	.0000E+00	.0000E+00	.0000E+00	.0000E+00	.2873E-04	.4898E-02	.4515E-02	.1010E-03
5	.2486E-01	.8285E+00	.2884E-02	.2566E-06	.0000E+00	.3380E-01	.0000E+00	.2990E-03	.0000E+00	.0000E+00	.3414E-02	.6842E-01	.3485E-01	.3029E-02
6	.1608E-02	.8584E+00	.2749E-02	.2424E-06	.0000E+00	.3225E-01	.0000E+00	.2855E-03	.0000E+00	.0000E+00	.3260E-02	.6532E-01	.3327E-01	.2892E-02
7	.8405E-04	.8605E+00	.2737E-02	.2412E-06	.0000E+00	.3211E-01	.0000E+00	.2842E-03	.0000E+00	.0000E+00	.3245E-02	.6502E-01	.3311E-01	.2879E-02
8	.4316E-05	.8606E+00	.2736E-02	.2411E-06	.0000E+00	.3210E-01	.0000E+00	.2841E-03	.0000E+00	.0000E+00	.3244E-02	.6501E-01	.3311E-01	.2878E-02
9	.2141E-06	.8581E+00	.2794E-02	.2558E-06	.0000E+00	.3270E-01	.0000E+00	.2891E-03	.0000E+00	.0000E+00	.3301E-02	.6615E-01	.3369E-01	.2929E-02
10	.2009E-09	.4628E-01	.1872E-01	.1648E-05	.0000E+00	.2197E+00	.0000E+00	.1944E-02	.0000E+00	.0000E+00	.2220E-01	.4449E+00	.2266E+00	.1970E-01

LIQUID COMPONENT FLOWS

SG#	SOLV	H2O	H2S	SO2	SULD	CO2	N2	C1	H2	CO	C2	C3	C4	C5+
1	.2899E-01	.3614E-02	.1632E-08	.1274E-09	.2531E-03	.5531E-10	.0000E+00	.0000E+00	.0000E+00	.0000E+00	.0000E+00	.5895E-09	.4911E-08	.0000E+00
2	.2999E-01	.1213E-01	.1852E-07	.5375E-09	.2531E-03	.1714E-08	.0000E+00	.0000E+00	.0000E+00	.0000E+00	.0000E+00	.1217E-07	.6282E-07	.0000E+00
3	.2931E-01	.1334E-01	.1243E-06	.9316E-09	.2531E-03	.3775E-07	.0000E+00	.0000E+00	.0000E+00	.0000E+00	.0000E+00	.1941E-06	.5675E-06	.7963E-09
4	.2927E-01	.1332E-01	.8032E-06	.1452E-08	.2531E-03	.8171E-06	.0000E+00	.0000E+00	.0000E+00	.0000E+00	.2119E-08	.3086E-05	.5071E-05	.2844E-07
5	.2924E-01	.1230E-01	.4672E-05	.1980E-08	.2531E-03	.1597E-04	.0000E+00	.7106E-08	.0000E+00	.0000E+00	.2600E-06	.4433E-04	.4086E-04	.9137E-06
6	.4139E-03	.4182E-02	.9216E-07	.5341E-10	.0000E+00	.3006E-06	.0000E+00	.1513E-09	.0000E+00	.0000E+00	.3385E-08	.1788E-06	.1137E-06	.3924E-08
7	.2805E-04	.5356E-02	.1161E-07	.7604E-11	.0000E+00	.4029E-07	.0000E+00	.2438E-10	.0000E+00	.0000E+00	.2787E-09	.4017E-08	.1540E-08	.7432E-10
8	.1470E-05	.5463E-02	.9050E-08	.6002E-11	.0000E+00	.3167E-07	.0000E+00	.1959E-10	.0000E+00	.0000E+00	.2068E-09	.2562E-08	.9248E-09	.4635E-10
9	.7324E-07	.5468E-02	.9126E-08	.6295E-11	.0000E+00	.3188E-07	.0000E+00	.1972E-10	.0000E+00	.0000E+00	.2073E-09	.2547E-08	.9165E-09	.4602E-10
10	.1290E-08	.5164E-02	.1771E-06	.1864E-09	.0000E+00	.6827E-06	.0000E+00	.2731E-09	.0000E+00	.0000E+00	.4013E-08	.6280E-07	.2560E-07	.1066E-08

VAPOR COMPONENT FLOWS

SG#	SOLV	H2O	H2S	SO2	SULD	CO2	N2	C1	H2	CO	C2	C3	C4	C5+
1	.9969E-03	.8519E-02	.1689E-07	.4100E-09	.0000E+00	.1659E-08	.0000E+00	.0000E+00	.0000E+00	.0000E+00	.0000E+00	.1158E-07	.5791E-07	.0000E+00
2	.3171E-03	.9725E-02	.1226E-06	.8042E-09	.0000E+00	.3769E-07	.0000E+00	.0000E+00	.0000E+00	.0000E+00	.0000E+00	.1935E-06	.5625E-06	.0000E+00
3	.2831E-03	.9705E-02	.8016E-06	.1324E-08	.0000E+00	.8170E-06	.0000E+00	.0000E+00	.0000E+00	.0000E+00	.0000E+00	.3086E-05	.5067E-05	.2843E-07
4	.2528E-03	.8690E-02	.4671E-05	.1852E-08	.0000E+00	.1597E-04	.0000E+00	.0000E+00	.0000E+00	.0000E+00	.2600E-06	.4433E-04	.4086E-04	.9137E-06
5	.4140E-03	.1380E-01	.4803E-04	.4273E-08	.0000E+00	.5628E-03	.0000E+00	.4979E-05	.0000E+00	.0000E+00	.5685E-04	.1139E-02	.5803E-03	.5044E-04
6	.2805E-04	.1497E-01	.4795E-04	.4227E-08	.0000E+00	.5625E-03	.0000E+00	.4979E-05	.0000E+00	.0000E+00	.5684E-04	.1139E-02	.5802E-03	.5043E-04
7	.1473E-05	.1508E-01	.4794E-04	.4225E-08	.0000E+00	.5625E-03	.0000E+00	.4979E-05	.0000E+00	.0000E+00	.5684E-04	.1139E-02	.5802E-03	.5043E-04
8	.7564E-07	.1508E-01	.4794E-04	.4226E-08	.0000E+00	.5625E-03	.0000E+00	.4979E-05	.0000E+00	.0000E+00	.5684E-04	.1139E-02	.5802E-03	.5043E-04
9	.3687E-08	.1478E-01	.4811E-04	.4406E-08	.0000E+00	.5631E-03	.0000E+00	.4979E-05	.0000E+00	.0000E+00	.5685E-04	.1139E-02	.5802E-03	.5043E-04
10	.5145E-12	.1185E-03	.4794E-04	.4219E-08	.0000E+00	.5625E-03	.0000E+00	.4978E-05	.0000E+00	.0000E+00	.5684E-04	.1139E-02	.5802E-03	.5043E-04

UNIT 42: SOUR WATER STRIPPER

ABSORBER OUTPUT DATA

F(FLOW)=	0.00000E+00	F(TEMP)=	.00	F(ENTHALPY)=	0.00000E+00	T= 377.96	V=0.7024E-03	L=0.9495E-02	HV =-.2288E+06	HL=-.2695E+06
F(FLOW)=	0.00000E+00	F(TEMP)=	.00	F(ENTHALPY)=	0.00000E+00	T= 377.96	V=0.7024E-03	L=0.1020E-01	HV =-.2288E+06	HL=-.2695E+06
F(FLOW)=	0.00000E+00	F(TEMP)=	.00	F(ENTHALPY)=	0.00000E+00	T= 377.96	V=0.7024E-03	L=0.1020E-01	HV =-.2288E+06	HL=-.2695E+06
F(FLOW)=	0.00000E+00	F(TEMP)=	.00	F(ENTHALPY)=	0.00000E+00	T= 377.96	V=0.6975E-03	L=0.1020E-01	HV =-.2288E+06	HL=-.2695E+06
F(FLOW)=	0.95928E-02	F(TEMP)=	308.00	F(ENTHALPY)=	-0.27209E+06	T= 377.43	V=0.9768E-04	L=0.1019E-01	HV =-.2298E+06	HL=-.2695E+06

LIQUID COMPONENT MOLE FRACTIONS

SG#	SOLV	H2O	H2S	SO2	SULD	CO2	N2	C1	H2	CO	C2	C3	C4	C5+
1	.2524E-06	.1000E+01	.0000E+00	.0000E+00	.0000E+00	.0000E+00	.0000E+00	.0000E+00	.0000E+00	.0000E+00	.0000E+00	.0000E+00	.0000E+00	.0000E+00
2	.2353E-06	.1000E+01	.0000E+00	.0000E+00	.0000E+00	.0000E+00	.0000E+00	.0000E+00	.0000E+00	.0000E+00	.0000E+00	.0000E+00	.0000E+00	.0000E+00
3	.2353E-06	.1000E+01	.0000E+00	.0000E+00	.0000E+00	.0000E+00	.0000E+00	.0000E+00	.0000E+00	.0000E+00	.0000E+00	.0000E+00	.0000E+00	.0000E+00
4	.2353E-06	.1000E+01	.1564E-07	.0000E+00	.0000E+00	.5320E-08	.0000E+00	.0000E+00	.0000E+00	.0000E+00	.0000E+00	.0000E+00	.0000E+00	.0000E+00
5	.2354E-06	.1000E+01	.1905E-05	.1478E-07	.0000E+00	.2182E-05	.0000E+00	.0000E+00	.0000E+00	.0000E+00	.0000E+00	.7869E-08	.2253E-08	.0000E+00

VAPOR COMPONENT MOLE FRACTIONS

SG#	SOLV	H2O	H2S	SO2	SULD	CO2	N2	C1	H2	CO	C2	C3	C4	C5+
1	.4827E-08	.1000E+01	.0000E+00	.0000E+00	.0000E+00	.0000E+00	.0000E+00	.0000E+00	.0000E+00	.0000E+00	.0000E+00	.0000E+00	.0000E+00	.0000E+00
2	.4501E-08	.1000E+01	.0000E+00	.0000E+00	.0000E+00	.0000E+00	.0000E+00	.0000E+00	.0000E+00	.0000E+00	.0000E+00	.0000E+00	.0000E+00	.0000E+00
3	.4500E-08	.1000E+01	.0000E+00	.0000E+00	.0000E+00	.0000E+00	.0000E+00	.0000E+00	.0000E+00	.0000E+00	.0000E+00	.0000E+00	.0000E+00	.0000E+00
4	.4500E-08	.9999E+00	.2785E-04	.0000E+00	.0000E+00	.3189E-04	.0000E+00	.0000E+00	.0000E+00	.0000E+00	.0000E+00	.0000E+00	.0000E+00	.0000E+00
5	.4406E-08	.9819E+00	.3367E-02	.3543E-05	.0000E+00	.1298E-01	.0000E+00	.0000E+00	.0000E+00	.0000E+00	.0000E+00	.1194E-02	.4868E-03	.0000E+00

LIQUID COMPONENT FLOWS

SG#	SOLV	H2O	H2S	SO2	SULD	CO2	N2	C1	H2	CO	C2	C3	C4	C5+
1	.2396E-08	.9495E-02	.0000E+00	.0000E+00	.0000E+00	.0000E+00	.0000E+00	.0000E+00	.0000E+00	.0000E+00	.0000E+00	.0000E+00	.0000E+00	.0000E+00
2	.2400E-08	.1020E-01	.0000E+00	.0000E+00	.0000E+00	.0000E+00	.0000E+00	.0000E+00	.0000E+00	.0000E+00	.0000E+00	.0000E+00	.0000E+00	.0000E+00
3	.2399E-08	.1020E-01	.0000E+00	.0000E+00	.0000E+00	.0000E+00	.0000E+00	.0000E+00	.0000E+00	.0000E+00	.0000E+00	.0000E+00	.0000E+00	.0000E+00
4	.2399E-08	.1020E-01	.1595E-09	.0000E+00	.0000E+00	.5425E-10	.0000E+00	.0000E+00	.0000E+00	.0000E+00	.0000E+00	.0000E+00	.0000E+00	.0000E+00
5	.2399E-08	.1019E-01	.1942E-07	.1506E-09	.0000E+00	.2224E-07	.0000E+00	.0000E+00	.0000E+00	.0000E+00	.0000E+00	.8020E-10	.2297E-10	.0000E+00

VAPOR COMPONENT FLOWS

SG#	SOLV	H2O	H2S	SO2	SULD	CO2	N2	C1	H2	CO	C2	C3	C4	C5+
1	.3390E-11	.7024E-03	.0000E+00	.0000E+00	.0000E+00	.0000E+00	.0000E+00	.0000E+00	.0000E+00	.0000E+00	.0000E+00	.0000E+00	.0000E+00	.0000E+00
2	.3161E-11	.7024E-03	.0000E+00	.0000E+00	.0000E+00	.0000E+00	.0000E+00	.0000E+00	.0000E+00	.0000E+00	.0000E+00	.0000E+00	.0000E+00	.0000E+00
3	.3161E-11	.7024E-03	.0000E+00	.0000E+00	.0000E+00	.0000E+00	.0000E+00	.0000E+00	.0000E+00	.0000E+00	.0000E+00	.0000E+00	.0000E+00	.0000E+00
4	.3138E-11	.6974E-03	.1942E-07	.0000E+00	.0000E+00	.2224E-07	.0000E+00	.0000E+00	.0000E+00	.0000E+00	.0000E+00	.0000E+00	.0000E+00	.0000E+00
5	.4304E-12	.9591E-04	.3289E-06	.3461E-09	.0000E+00	.1268E-05	.0000E+00	.0000E+00	.0000E+00	.0000E+00	.0000E+00	.1166E-06	.4755E-07	.0000E+00

UNIT 51: DEPROPANIZER

ABSORBER OUTPUT DATA

F(FLOW)=	0.00000E+00	F(TEMP)=	.00	F(ENTHALPY)=	0.00000E+00	T=	420.31	V=0.2042E+00	L=0.1058E+00	HV =-.7090E+05	HL=-.1003E+06
F(FLOW)=	0.00000E+00	F(TEMP)=	.00	F(ENTHALPY)=	0.00000E+00	T=	413.88	V=0.2068E+00	L=0.3100E+00	HV =-.7143E+05	HL=-.9976E+05
F(FLOW)=	0.00000E+00	F(TEMP)=	.00	F(ENTHALPY)=	0.00000E+00	T=	409.23	V=0.2058E+00	L=0.3127E+00	HV =-.7172E+05	HL=-.9987E+05
F(FLOW)=	0.00000E+00	F(TEMP)=	.00	F(ENTHALPY)=	0.00000E+00	T=	404.66	V=0.2024E+00	L=0.3116E+00	HV =-.7186E+05	HL=-.1002E+06
F(FLOW)=	0.00000E+00	F(TEMP)=	.00	F(ENTHALPY)=	0.00000E+00	T=	399.21	V=0.1986E+00	L=0.3083E+00	HV =-.7192E+05	HL=-.1006E+06
F(FLOW)=	0.00000E+00	F(TEMP)=	.00	F(ENTHALPY)=	0.00000E+00	T=	392.68	V=0.1956E+00	L=0.3044E+00	HV =-.7190E+05	HL=-.1010E+06
F(FLOW)=	0.00000E+00	F(TEMP)=	.00	F(ENTHALPY)=	0.00000E+00	T=	385.54	V=0.1938E+00	L=0.3015E+00	HV =-.7181E+05	HL=-.1012E+06
F(FLOW)=	0.00000E+00	F(TEMP)=	.00	F(ENTHALPY)=	0.00000E+00	T=	378.43	V=0.1899E+00	L=0.2997E+00	HV =-.7164E+05	HL=-.1014E+06
F(FLOW)=	0.00000E+00	F(TEMP)=	.00	F(ENTHALPY)=	0.00000E+00	T=	370.53	V=0.1633E+00	L=0.2957E+00	HV =-.7199E+05	HL=-.1016E+06
F(FLOW)=	0.29739E+00	F(TEMP)=	334.00	F(ENTHALPY)=	-0.11008E+06	T=	351.08	V=0.2968E+00	L=0.2691E+00	HV =-.9136E+05	HL=-.1048E+06
F(FLOW)=	0.00000E+00	F(TEMP)=	.00	F(ENTHALPY)=	0.00000E+00	T=	347.24	V=0.3029E+00	L=0.1053E+00	HV =-.9125E+05	HL=-.1028E+06
F(FLOW)=	0.00000E+00	F(TEMP)=	.00	F(ENTHALPY)=	0.00000E+00	T=	344.84	V=0.3065E+00	L=0.1114E+00	HV =-.9116E+05	HL=-.1019E+06
F(FLOW)=	0.00000E+00	F(TEMP)=	.00	F(ENTHALPY)=	0.00000E+00	T=	342.92	V=0.3092E+00	L=0.1150E+00	HV =-.9106E+05	HL=-.1013E+06
F(FLOW)=	0.00000E+00	F(TEMP)=	.00	F(ENTHALPY)=	0.00000E+00	T=	340.78	V=0.3121E+00	L=0.1177E+00	HV =-.9091E+05	HL=-.1008E+06
F(FLOW)=	0.00000E+00	F(TEMP)=	.00	F(ENTHALPY)=	0.00000E+00	T=	338.10	V=0.3159E+00	L=0.1206E+00	HV =-.9070E+05	HL=-.1002E+06
F(FLOW)=	0.00000E+00	F(TEMP)=	.00	F(ENTHALPY)=	0.00000E+00	T=	334.91	V=0.3208E+00	L=0.1244E+00	HV =-.9045E+05	HL=-.9940E+05
F(FLOW)=	0.00000E+00	F(TEMP)=	.00	F(ENTHALPY)=	0.00000E+00	T=	331.60	V=0.3262E+00	L=0.1293E+00	HV =-.9018E+05	HL=-.9843E+05
F(FLOW)=	0.00000E+00	F(TEMP)=	.00	F(ENTHALPY)=	0.00000E+00	T=	328.55	V=0.3306E+00	L=0.1347E+00	HV =-.8997E+05	HL=-.9747E+05
F(FLOW)=	0.00000E+00	F(TEMP)=	.00	F(ENTHALPY)=	0.00000E+00	T=	325.13	V=0.3285E+00	L=0.1391E+00	HV =-.9042E+05	HL=-.9674E+05
F(FLOW)=	0.00000E+00	F(TEMP)=	.00	F(ENTHALPY)=	0.00000E+00	T=	312.53	V=0.1915E+00	L=0.1370E+00	HV =-.1023E+06	HL=-.9791E+05

LIQUID COMPONENT MOLE FRACTIONS

SG#	SOLV	H2O	H2S	SO2	SULD	CO2	N2	C1	H2	CO	C2	C3	C4	C5+
1	.2372E-05	.8530E-02	.1596E-05	.1715E-07	.0000E+00	.0000E+00	.0000E+00	.0000E+00	.0000E+00	.0000E+00	.2637E-06	.9012E-02	.5546E+00	.4279E+00
2	.8182E-06	.3713E-02	.5730E-05	.3064E-07	.0000E+00	.0000E+00	.0000E+00	.0000E+00	.0000E+00	.0000E+00	.1301E-05	.2043E-01	.6530E+00	.3228E+00
3	.8052E-06	.3181E-02	.1799E-04	.4622E-07	.0000E+00	.0000E+00	.0000E+00	.0000E+00	.0000E+00	.0000E+00	.5772E-05	.3988E-01	.6911E+00	.2658E+00
4	.8076E-06	.3119E-02	.5258E-04	.6261E-07	.0000E+00	.0000E+00	.0000E+00	.3361E-08	.0000E+00	.0000E+00	.2431E-04	.7125E-01	.6879E+00	.2376E+00
5	.8160E-06	.3119E-02	.1448E-03	.7733E-07	.0000E+00	.0000E+00	.0000E+00	.4268E-07	.0000E+00	.0000E+00	.9781E-04	.1183E+00	.6552E+00	.2231E+00
6	.8261E-06	.3128E-02	.3729E-03	.8661E-07	.0000E+00	.0000E+00	.0000E+00	.5272E-06	.0000E+00	.0000E+00	.3735E-03	.1820E+00	.6006E+00	.2136E+00
7	.8338E-06	.3128E-02	.8871E-03	.8696E-07	.0000E+00	.9643E-08	.0000E+00	.6301E-05	.0000E+00	.0000E+00	.1340E-02	.2566E+00	.5328E+00	.2053E+00
8	.8385E-06	.3119E-02	.1932E-02	.7786E-07	.0000E+00	.5994E-06	.0000E+00	.7263E-04	.0000E+00	.0000E+00	.4482E-02	.3292E+00	.4639E+00	.1974E+00
9	.8495E-06	.3136E-02	.3820E-02	.6240E-07	.0000E+00	.3212E-04	.8821E-08	.8023E-03	.0000E+00	.0000E+00	.1388E-01	.3816E+00	.4051E+00	.1916E+00
10	.9333E-06	.3415E-02	.6464E-02	.4370E-07	.0000E+00	.1388E-02	.1573E-06	.8075E-02	.0000E+00	.0000E+00	.3761E-01	.3768E+00	.3678E+00	.1984E+00
11	.0000E+00	.1557E-03	.6917E-02	.5830E-07	.0000E+00	.1508E-02	.1580E-06	.8199E-02	.0000E+00	.0000E+00	.3929E-01	.4118E+00	.4369E+00	.9528E-01
12	.0000E+00	.5805E-05	.7242E-02	.7405E-07	.0000E+00	.1590E-02	.1585E-06	.8282E-02	.0000E+00	.0000E+00	.4045E-01	.4398E+00	.4625E+00	.4012E-01
13	.0000E+00	.1911E-06	.7544E-02	.9176E-07	.0000E+00	.1661E-02	.1590E-06	.8354E-02	.0000E+00	.0000E+00	.4148E-01	.4695E+00	.4558E+00	.1559E-01
14	.0000E+00	.5700E-08	.7920E-02	.1112E-06	.0000E+00	.1745E-02	.1595E-06	.8434E-02	.0000E+00	.0000E+00	.4269E-01	.5092E+00	.4243E+00	.5683E-02
15	.0000E+00	.0000E+00	.8434E-02	.1296E-06	.0000E+00	.1857E-02	.1601E-06	.8535E-02	.0000E+00	.0000E+00	.4428E-01	.5647E+00	.3703E+00	.1932E-02
16	.0000E+00	.0000E+00	.9119E-02	.1405E-06	.0000E+00	.2002E-02	.1608E-06	.8655E-02	.0000E+00	.0000E+00	.4629E-01	.6363E+00	.2970E+00	.6005E-03
17	.0000E+00	.0000E+00	.9981E-02	.1375E-06	.0000E+00	.2168E-02	.1615E-06	.8786E-02	.0000E+00	.0000E+00	.4866E-01	.7160E+00	.2142E+00	.1673E-03
18	.0000E+00	.0000E+00	.1113E-01	.1186E-06	.0000E+00	.2344E-02	.1626E-06	.8942E-02	.0000E+00	.0000E+00	.5191E-01	.7889E+00	.1368E+00	.4146E-04
19	.0000E+00	.0000E+00	.1309E-01	.8888E-07	.0000E+00	.2665E-02	.1688E-06	.9498E-02	.0000E+00	.0000E+00	.6014E-01	.8383E+00	.7632E-01	.9152E-05
20	.0000E+00	.0000E+00	.1692E-01	.5517E-07	.0000E+00	.6249E-02	.2943E-06	.1671E-01	.0000E+00	.0000E+00	.9216E-01	.8326E+00	.3534E-01	.1736E-05

VAPOR COMPONENT MOLE FRACTIONS

SG#	SOLV	H2O	H2S	SO2	SULD	CO2	N2	C1	H2	CO	C2	C3	C4	C5+
1	.1281E-07	.1217E-02	.7872E-05	.3763E-07	.0000E+00	.0000E+00	.0000E+00	.0000E+00	.0000E+00	.0000E+00	.1838E-05	.2635E-01	.7040E+00	.2684E+00
2	.3480E-08	.4452E-03	.2637E-04	.6110E-07	.0000E+00	.0000E+00	.0000E+00	.0000E+00	.0000E+00	.0000E+00	.8589E-05	.5567E-01	.7609E+00	.1829E+00
3	.2875E-08	.3359E-03	.7880E-04	.8599E-07	.0000E+00	.0000E+00	.0000E+00	.0000E+00	.0000E+00	.0000E+00	.3667E-04	.1033E+00	.7565E+00	.1398E+00
4	.2424E-08	.2903E-03	.2196E-03	.1088E-06	.0000E+00	.0000E+00	.0000E+00	.6499E-07	.0000E+00	.0000E+00	.1488E-03	.1755E+00	.7078E+00	.1160E+00
5	.1985E-08	.2488E-03	.5707E-03	.1236E-06	.0000E+00	.0000E+00	.0000E+00	.8081E-06	.0000E+00	.0000E+00	.5724E-03	.2742E+00	.6250E+00	.9936E-01
6	.1556E-08	.2057E-03	.1366E-02	.1247E-06	.0000E+00	.0000E+00	.0000E+00	.9709E-05	.0000E+00	.0000E+00	.2064E-02	.3905E+00	.5209E+00	.8485E-01
7	.1183E-08	.1649E-03	.2985E-02	.1110E-06	.0000E+00	.9266E-06	.0000E+00	.1123E-03	.0000E+00	.0000E+00	.6928E-02	.5039E+00	.4143E+00	.7153E-01
8	.8916E-09	.1306E-03	.5947E-02	.8762E-07	.0000E+00	.5002E-04	.0000E+00	.1249E-02	.0000E+00	.0000E+00	.2161E-01	.5891E+00	.3218E+00	.5998E-01
9	.6516E-09	.1009E-03	.1065E-01	.6090E-07	.0000E+00	.2287E-02	.2593E-06	.1331E-01	.0000E+00	.0000E+00	.6198E-01	.6151E+00	.2467E+00	.4975E-01
10	.3107E-09	.5524E-04	.1410E-01	.2960E-07	.0000E+00	.6602E-01	.4490E-05	.1239E+00	.0000E+00	.0000E+00	.1387E+00	.4643E+00	.1590E+00	.3381E-01
11	.0000E+00	.2135E-05	.1407E-01	.3596E-07	.0000E+00	.6475E-01	.4403E-05	.1216E+00	.0000E+00	.0000E+00	.1372E+00	.4736E+00	.1741E+00	.1476E-01
12	.0000E+00	.7171E-07	.1410E-01	.4306E-07	.0000E+00	.6403E-01	.4353E-05	.1202E+00	.0000E+00	.0000E+00	.1364E+00	.4844E+00	.1750E+00	.5850E-02
13	.0000E+00	.2170E-08	.1419E-01	.5090E-07	.0000E+00	.6353E-01	.4317E-05	.1193E+00	.0000E+00	.0000E+00	.1361E+00	.4993E+00	.1654E+00	.2164E-02
14	.0000E+00	.5888E-10	.1433E-01	.5853E-07	.0000E+00	.6300E-01	.4279E-05	.1183E+00	.0000E+00	.0000E+00	.1358E+00	.5208E+00	.1469E+00	.7466E-03
15	.0000E+00	.0000E+00	.1453E-01	.6372E-07	.0000E+00	.6232E-01	.4229E-05	.1170E+00	.0000E+00	.0000E+00	.1355E+00	.5496E+00	.1208E+00	.2366E-03
16	.0000E+00	.0000E+00	.1479E-01	.6368E-07	.0000E+00	.6146E-01	.4167E-05	.1154E+00	.0000E+00	.0000E+00	.1351E+00	.5831E+00	.9010E-01	.6751E-04
17	.0000E+00	.0000E+00	.1519E-01	.5711E-07	.0000E+00	.6055E-01	.4101E-05	.1137E+00	.0000E+00	.0000E+00	.1350E+00	.6153E+00	.6016E-01	.1718E-04
18	.0000E+00	.0000E+00	.1596E-01	.4540E-07	.0000E+00	.5991E-01	.4052E-05	.1126E+00	.0000E+00	.0000E+00	.1374E+00	.6385E+00	.3574E-01	.3910E-05
19	.0000E+00	.0000E+00	.1758E-01	.3106E-07	.0000E+00	.6178E-01	.4129E-05	.1162E+00	.0000E+00	.0000E+00	.1512E+00	.6348E+00	.1838E-01	.7838E-06
20	.0000E+00	.0000E+00	.1804E-01	.1381E-07	.0000E+00	.1015E+00	.6873E-05	.1875E+00	.0000E+00	.0000E+00	.1935E+00	.4933E+00	.6255E-02	.1022E-06

LIQUID COMPONENT FLOWS

SG#	SOLV	H2O	H2S	SO2	SULD	CO2	N2	C1	H2	CO	C2	C3	C4	C5+
1	.2510E-06	.9027E-03	.1689E-06	.1814E-08	.0000E+00	.0000E+00	.0000E+00	.0000E+00	.0000E+00	.0000E+00	.2790E-07	.9536E-03	.5869E-01	.4528E-01
2	.2537E-06	.1151E-02	.1776E-05	.9499E-08	.0000E+00	.0000E+00	.0000E+00	.0000E+00	.0000E+00	.0000E+00	.4033E-06	.6335E-02	.2025E+00	.1001E+00
3	.2518E-06	.9947E-03	.5624E-05	.1445E-07	.0000E+00	.0000E+00	.0000E+00	.0000E+00	.0000E+00	.0000E+00	.1805E-05	.1247E-01	.2161E+00	.8312E-01
4	.2516E-06	.9718E-03	.1638E-04	.1951E-07	.0000E+00	.0000E+00	.0000E+00	.1047E-08	.0000E+00	.0000E+00	.7573E-05	.2220E-01	.2143E+00	.7404E-01
5	.2515E-06	.9614E-03	.4463E-04	.2384E-07	.0000E+00	.0000E+00	.0000E+00	.1316E-07	.0000E+00	.0000E+00	.3015E-04	.3648E-01	.2020E+00	.6876E-01
6	.2514E-06	.9521E-03	.1135E-03	.2636E-07	.0000E+00	.0000E+00	.0000E+00	.1605E-06	.0000E+00	.0000E+00	.1137E-03	.5540E-01	.1828E+00	.6501E-01
7	.2514E-06	.9429E-03	.2674E-03	.2622E-07	.0000E+00	.2907E-08	.0000E+00	.1900E-05	.0000E+00	.0000E+00	.4039E-03	.7736E-01	.1606E+00	.6188E-01
8	.2513E-06	.9346E-03	.5789E-03	.2333E-07	.0000E+00	.1796E-06	.0000E+00	.2176E-04	.0000E+00	.0000E+00	.1343E-02	.9863E-01	.1390E+00	.5915E-01
9	.2512E-06	.9275E-03	.1130E-02	.1845E-07	.0000E+00	.9499E-05	.2608E-08	.2373E-03	.0000E+00	.0000E+00	.4105E-02	.1128E+00	.1198E+00	.5667E-01
10	.2512E-06	.9191E-03	.1740E-02	.1176E-07	.0000E+00	.3735E-03	.4234E-07	.2173E-02	.0000E+00	.0000E+00	.1012E-01	.1014E+00	.9898E-01	.5340E-01
11	.0000E+00	.1640E-04	.7284E-03	.6140E-08	.0000E+00	.1588E-03	.1664E-07	.8634E-03	.0000E+00	.0000E+00	.4138E-02	.4336E-01	.4601E-01	.1003E-01
12	.0000E+00	.6468E-06	.8068E-03	.8250E-08	.0000E+00	.1771E-03	.1766E-07	.9227E-03	.0000E+00	.0000E+00	.4507E-02	.4900E-01	.5153E-01	.4470E-02
13	.0000E+00	.2198E-07	.8679E-03	.1056E-07	.0000E+00	.1911E-03	.1829E-07	.9610E-03	.0000E+00	.0000E+00	.4771E-02	.5401E-01	.5244E-01	.1793E-02
14	.0000E+00	.6709E-09	.9321E-03	.1309E-07	.0000E+00	.2054E-03	.1878E-07	.9927E-03	.0000E+00	.0000E+00	.5024E-02	.5993E-01	.4994E-01	.6689E-03
15	.0000E+00	.0000E+00	.1017E-02	.1562E-07	.0000E+00	.2239E-03	.1931E-07	.1029E-02	.0000E+00	.0000E+00	.5339E-02	.6809E-01	.4465E-01	.2330E-03
16	.0000E+00	.0000E+00	.1134E-02	.1748E-07	.0000E+00	.2491E-03	.2000E-07	.1077E-02	.0000E+00	.0000E+00	.5759E-02	.7916E-01	.3695E-01	.7471E-04
17	.0000E+00	.0000E+00	.1291E-02	.1779E-07	.0000E+00	.2804E-03	.2089E-07	.1136E-02	.0000E+00	.0000E+00	.6294E-02	.9261E-01	.2771E-01	.2164E-04
18	.0000E+00	.0000E+00	.1500E-02	.1599E-07	.0000E+00	.3157E-03	.2191E-07	.1205E-02	.0000E+00	.0000E+00	.6993E-02	.1063E+00	.1843E-01	.5585E-05
19	.0000E+00	.0000E+00	.1821E-02	.1237E-07	.0000E+00	.3707E-03	.2348E-07	.1321E-02	.0000E+00	.0000E+00	.8367E-02	.1166E+00	.1062E-01	.1273E-05
20	.0000E+00	.0000E+00	.2318E-02	.7558E-08	.0000E+00	.8562E-03	.4032E-07	.2289E-02	.0000E+00	.0000E+00	.1263E-01	.1141E+00	.4841E-02	.2379E-06

VAPOR COMPONENT FLOWS

SG#	SOLV	H2O	H2S	SO2	SULD	CO2	N2	C1	H2	CO	C2	C3	C4	C5+
1	.2616E-08	.2484E-03	.1607E-05	.7684E-08	.0000E+00	.0000E+00	.0000E+00	.0000E+00	.0000E+00	.0000E+00	.3754E-06	.5381E-02	.1438E+00	.5481E-01
2	.7199E-09	.9208E-04	.5455E-05	.1264E-07	.0000E+00	.0000E+00	.0000E+00	.0000E+00	.0000E+00	.0000E+00	.1777E-05	.1152E-01	.1574E+00	.3784E-01
3	.5916E-09	.6912E-04	.1621E-04	.1769E-07	.0000E+00	.0000E+00	.0000E+00	.0000E+00	.0000E+00	.0000E+00	.7545E-05	.2124E-01	.1556E+00	.2876E-01
4	.4906E-09	.5877E-04	.4446E-04	.2202E-07	.0000E+00	.0000E+00	.0000E+00	.1316E-07	.0000E+00	.0000E+00	.3012E-04	.3552E-01	.1433E+00	.2348E-01
5	.3942E-09	.4940E-04	.1133E-03	.2455E-07	.0000E+00	.0000E+00	.0000E+00	.1605E-06	.0000E+00	.0000E+00	.1137E-03	.5444E-01	.1241E+00	.1973E-01
6	.3045E-09	.4025E-04	.2673E-03	.2440E-07	.0000E+00	.0000E+00	.0000E+00	.1899E-05	.0000E+00	.0000E+00	.4038E-03	.7640E-01	.1019E+00	.1660E-01
7	.2292E-09	.3197E-04	.5787E-03	.2152E-07	.0000E+00	.1796E-06	.0000E+00	.2176E-04	.0000E+00	.0000E+00	.1343E-02	.9767E-01	.8031E-01	.1387E-01
8	.1693E-09	.2479E-04	.1129E-02	.1664E-07	.0000E+00	.9499E-05	.0000E+00	.2372E-03	.0000E+00	.0000E+00	.4105E-02	.1119E+00	.6111E-01	.1139E-01
9	.1064E-09	.1647E-04	.1739E-02	.9945E-08	.0000E+00	.3734E-03	.4234E-07	.2173E-02	.0000E+00	.0000E+00	.1012E-01	.1004E+00	.4029E-01	.8124E-02
10	.9220E-10	.1640E-04	.4183E-02	.8784E-08	.0000E+00	.1959E-01	.1333E-05	.3676E-01	.0000E+00	.0000E+00	.4118E-01	.1378E+00	.4720E-01	.1003E-01
11	.0000E+00	.6467E-06	.4262E-02	.1089E-07	.0000E+00	.1961E-01	.1334E-05	.3682E-01	.0000E+00	.0000E+00	.4155E-01	.1435E+00	.5272E-01	.4470E-02
12	.0000E+00	.2198E-07	.4323E-02	.1320E-07	.0000E+00	.1963E-01	.1334E-05	.3686E-01	.0000E+00	.0000E+00	.4181E-01	.1485E+00	.5364E-01	.1793E-02
13	.0000E+00	.6708E-09	.4387E-02	.1574E-07	.0000E+00	.1964E-01	.1335E-05	.3689E-01	.0000E+00	.0000E+00	.4207E-01	.1544E+00	.5114E-01	.6689E-03
14	.0000E+00	.1838E-10	.4472E-02	.1826E-07	.0000E+00	.1966E-01	.1335E-05	.3692E-01	.0000E+00	.0000E+00	.4238E-01	.1625E+00	.4585E-01	.2330E-03
15	.0000E+00	.0000E+00	.4590E-02	.2013E-07	.0000E+00	.1969E-01	.1336E-05	.3697E-01	.0000E+00	.0000E+00	.4280E-01	.1736E+00	.3815E-01	.7473E-04
16	.0000E+00	.0000E+00	.4746E-02	.2043E-07	.0000E+00	.1972E-01	.1337E-05	.3703E-01	.0000E+00	.0000E+00	.4334E-01	.1871E+00	.2891E-01	.2166E-04
17	.0000E+00	.0000E+00	.4955E-02	.1863E-07	.0000E+00	.1975E-01	.1338E-05	.3710E-01	.0000E+00	.0000E+00	.4404E-01	.2007E+00	.1963E-01	.5605E-05
18	.0000E+00	.0000E+00	.5276E-02	.1501E-07	.0000E+00	.1981E-01	.1340E-05	.3722E-01	.0000E+00	.0000E+00	.4541E-01	.2111E+00	.1181E-01	.1293E-05
19	.0000E+00	.0000E+00	.5773E-02	.1020E-07	.0000E+00	.2029E-01	.1356E-05	.3818E-01	.0000E+00	.0000E+00	.4967E-01	.2085E+00	.6039E-02	.2575E-06
20	.0000E+00	.0000E+00	.3455E-02	.2644E-08	.0000E+00	.1944E-01	.1316E-05	.3590E-01	.0000E+00	.0000E+00	.3704E-01	.9445E-01	.1198E-02	.1958E-07

UNIT 54: SECONDARY ABSORBER

INPUT PARAMETERS: K2= 100.0 VTRAY= .0600 RHOL= 4.56
QR= 0.00000E+00 TC=308.00 FS= .000

ABSORBER OUTPUT DATA

F(FLOW)=	0.19148E+00	F(TEMP)=	312.53	F(ENTHALPY)=	-0.10229E+06	T=	330.69	V=0.1868E+00	L=0.4643E-01
F(FLOW)=	0.00000E+00	F(TEMP)=	.00	F(ENTHALPY)=	0.00000E+00	T=	331.49	V=0.1868E+00	L=0.3858E-01
F(FLOW)=	0.00000E+00	F(TEMP)=	.00	F(ENTHALPY)=	0.00000E+00	T=	331.84	V=0.1866E+00	L=0.3838E-01
F(FLOW)=	0.00000E+00	F(TEMP)=	.00	F(ENTHALPY)=	0.00000E+00	T=	332.44	V=0.1861E+00	L=0.3822E-01
F(FLOW)=	0.90714E-02	F(TEMP)=	308.00	F(ENTHALPY)=	-0.91329E+05	T=	332.99	V=0.1804E+00	L=0.3767E-01
F(FLOW)=	0.00000E+00	F(TEMP)=	.00	F(ENTHALPY)=	0.00000E+00	T=	333.68	V=0.1799E+00	L=0.2290E-01
F(FLOW)=	0.00000E+00	F(TEMP)=	.00	F(ENTHALPY)=	0.00000E+00	T=	333.85	V=0.1798E+00	L=0.2246E-01
F(FLOW)=	0.00000E+00	F(TEMP)=	.00	F(ENTHALPY)=	0.00000E+00	T=	333.86	V=0.1798E+00	L=0.2234E-01
F(FLOW)=	0.00000E+00	F(TEMP)=	.00	F(ENTHALPY)=	0.00000E+00	T=	333.78	V=0.1798E+00	L=0.2232E-01
F(FLOW)=	0.00000E+00	F(TEMP)=	.00	F(ENTHALPY)=	0.00000E+00	T=	333.58	V=0.1799E+00	L=0.2235E-01
F(FLOW)=	0.00000E+00	F(TEMP)=	.00	F(ENTHALPY)=	0.00000E+00	T=	333.11	V=0.1801E+00	L=0.2243E-01
F(FLOW)=	0.00000E+00	F(TEMP)=	.00	F(ENTHALPY)=	0.00000E+00	T=	331.99	V=0.1802E+00	L=0.2262E-01
F(FLOW)=	0.13769E-01	F(TEMP)=	293.00	F(ENTHALPY)=	-0.31759E+05	T=	328.77	V=0.1713E+00	L=0.2275E-01
F(FLOW)=	0.00000E+00	F(TEMP)=	.00	F(ENTHALPY)=	0.00000E+00	T=	328.75	V=0.1713E+00	L=0.1522E-04
F(FLOW)=	0.00000E+00	F(TEMP)=	.00	F(ENTHALPY)=	0.00000E+00	T=	308.00	V=0.1712E+00	L=0.2181E-04

LIQUID COMPONENT MOLE FRACTIONS

SG#	SOLV	H2O	H2S	SO2	SULD	CO2	N2	C1	H2	CO	C2	C3	C4	C5+
1	.3957E+00	.1196E+00	.2162E-02	.5918E-02	.1118E+00	.4890E-01	.3196E-07	.3804E-02	.0000E+00	.0000E+00	.1762E-01	.2865E+00	.8055E-02	.5853E-07
2	.4764E+00	.6917E-01	.1307E-04	.4945E-01	.1046E-01	.5093E-01	.3302E-07	.3962E-02	.0000E+00	.0000E+00	.1858E-01	.3122E+00	.8849E-02	.6381E-07
3	.4790E+00	.6232E-01	.7084E-07	.5863E-01	.4217E-02	.5091E-01	.3308E-07	.3970E-02	.0000E+00	.0000E+00	.1860E-01	.3136E+00	.8803E-02	.6374E-07
4	.4810E+00	.6215E-01	.6575E-08	.6041E-01	.4198E-02	.5048E-01	.3306E-07	.3957E-02	.0000E+00	.0000E+00	.1847E-01	.3109E+00	.8506E-02	.6258E-07
5	.4880E+00	.6316E-01	.5264E-08	.6178E-01	.4259E-02	.4955E-01	.6635E-07	.4043E-02	.0000E+00	.0000E+00	.1870E-01	.3027E+00	.7782E-02	.6056E-07
6	.5308E+00	.6739E-01	.5163E-08	.1663E-01	.4631E-02	.4919E-01	.6621E-07	.4028E-02	.0000E+00	.0000E+00	.1855E-01	.3011E+00	.7700E-02	.5961E-07
7	.5415E+00	.6955E-01	.5137E-08	.4675E-02	.4724E-02	.4906E-01	.6614E-07	.4022E-02	.0000E+00	.0000E+00	.1850E-01	.3003E+00	.7669E-02	.5930E-07
8	.5443E+00	.7025E-01	.5141E-08	.1329E-02	.4748E-02	.4905E-01	.6613E-07	.4021E-02	.0000E+00	.0000E+00	.1849E-01	.3002E+00	.7667E-02	.5927E-07
9	.5447E+00	.7041E-01	.5178E-08	.3782E-03	.4752E-02	.4910E-01	.6616E-07	.4023E-02	.0000E+00	.0000E+00	.1851E-01	.3004E+00	.7682E-02	.5941E-07
10	.5440E+00	.7031E-01	.5352E-08	.1069E-03	.4746E-02	.4925E-01	.6623E-07	.4030E-02	.0000E+00	.0000E+00	.1857E-01	.3012E+00	.7720E-02	.5978E-07
11	.5420E+00	.6996E-01	.6026E-08	.2963E-04	.4729E-02	.4960E-01	.6640E-07	.4045E-02	.0000E+00	.0000E+00	.1870E-01	.3031E+00	.7789E-02	.6069E-07
12	.5377E+00	.6916E-01	.8226E-08	.7738E-05	.4690E-02	.5043E-01	.6691E-07	.4090E-02	.0000E+00	.0000E+00	.1907E-01	.3071E+00	.7825E-02	.6280E-07
13	.5346E+00	.6823E-01	.1479E-07	.1656E-05	.4664E-02	.5174E-01	.7182E-07	.4421E-02	.0000E+00	.0000E+00	.2086E-01	.3083E+00	.7227E-02	.6625E-07
14	.5380E+00	.6982E-01	.1472E-07	.1665E-05	.1657E-05	.5172E-01	.7179E-07	.4418E-02	.0000E+00	.0000E+00	.2085E-01	.3080E+00	.7219E-02	.6618E-07
15	.3784E+00	.2067E+00	.2040E-07	.3422E-05	.8545E-06	.6214E-01	.7747E-07	.4935E-02	.0000E+00	.0000E+00	.2571E-01	.3143E+00	.7815E-02	.9080E-07

VAPOR COMPONENT MOLE FRACTIONS

SG#	SOLV	H2O	H2S	SO2	SULD	CO2	N2	C1	H2	CO	C2	C3	C4	C5+
1	.5219E-04	.1661E-02	.8702E-03	.1970E-03	.0000E+00	.1024E+00	.7043E-05	.1920E+00	.0000E+00	.0000E+00	.1977E+00	.4988E+00	.6236E-02	.1034E-06
2	.6520E-04	.1042E-02	.5048E-05	.1598E-02	.0000E+00	.1024E+00	.7045E-05	.1920E+00	.0000E+00	.0000E+00	.1978E+00	.4989E+00	.6219E-02	.1034E-06
3	.6665E-04	.9585E-03	.2743E-07	.1911E-02	.0000E+00	.1023E+00	.7051E-05	.1922E+00	.0000E+00	.0000E+00	.1979E+00	.4985E+00	.6156E-02	.1032E-06
4	.6883E-04	.9827E-03	.2579E-08	.2016E-02	.0000E+00	.1023E+00	.7078E-05	.1928E+00	.0000E+00	.0000E+00	.1985E+00	.4974E+00	.6002E-02	.1029E-06
5	.7165E-04	.1027E-02	.2094E-08	.2112E-02	.0000E+00	.1014E+00	.1430E-04	.1985E+00	.0000E+00	.0000E+00	.2032E+00	.4881E+00	.5544E-02	.1010E-06
6	.8047E-04	.1131E-02	.2083E-08	.5834E-03	.0000E+00	.1015E+00	.1433E-04	.1990E+00	.0000E+00	.0000E+00	.2036E+00	.4885E+00	.5535E-02	.1011E-06
7	.8272E-04	.1175E-02	.2081E-08	.1652E-03	.0000E+00	.1016E+00	.1434E-04	.1991E+00	.0000E+00	.0000E+00	.2037E+00	.4886E+00	.5533E-02	.1011E-06
8	.8319E-04	.1188E-02	.2084E-08	.4700E-04	.0000E+00	.1016E+00	.1434E-04	.1992E+00	.0000E+00	.0000E+00	.2038E+00	.4886E+00	.5535E-02	.1011E-06
9	.8297E-04	.1186E-02	.2095E-08	.1333E-04	.0000E+00	.1016E+00	.1434E-04	.1991E+00	.0000E+00	.0000E+00	.2037E+00	.4887E+00	.5540E-02	.1012E-06
10	.8209E-04	.1174E-02	.2157E-08	.3739E-05	.0000E+00	.1016E+00	.1434E-04	.1990E+00	.0000E+00	.0000E+00	.2037E+00	.4889E+00	.5550E-02	.1013E-06
11	.8000E-04	.1143E-02	.2403E-08	.1017E-05	.0000E+00	.1017E+00	.1432E-04	.1988E+00	.0000E+00	.0000E+00	.2035E+00	.4892E+00	.5556E-02	.1015E-06
12	.7534E-04	.1075E-02	.3202E-08	.2541E-06	.0000E+00	.1018E+00	.1431E-04	.1987E+00	.0000E+00	.0000E+00	.2036E+00	.4892E+00	.5483E-02	.1019E-06
13	.6442E-04	.9187E-03	.5385E-08	.4795E-07	.0000E+00	.1002E+00	.1505E-04	.2086E+00	.0000E+00	.0000E+00	.2115E+00	.4739E+00	.4810E-02	.9845E-07
14	.6478E-04	.9388E-03	.5361E-08	.4822E-07	.0000E+00	.1002E+00	.1505E-04	.2086E+00	.0000E+00	.0000E+00	.2115E+00	.4739E+00	.4810E-02	.9846E-07
15	.1660E-04	.9126E-03	.5286E-08	.4775E-07	.0000E+00	.1002E+00	.1505E-04	.2086E+00	.0000E+00	.0000E+00	.2115E+00	.4739E+00	.4810E-02	.9846E-07

LIQUID COMPONENT FLOWS

SG#	SOLV	H2O	H2S	SO2	SULD	CO2	N2	C1	H2	CO	C2	C3	C4	C5+
1	.1837E-01	.5551E-02	.1004E-03	.2748E-03	.5193E-02	.2270E-02	.1484E-08	.1766E-03	.0000E+00	.0000E+00	.8179E-03	.1330E-01	.3740E-03	.2717E-08
2	.1838E-01	.2669E-02	.5042E-06	.1908E-02	.4035E-03	.1965E-02	.1274E-08	.1529E-03	.0000E+00	.0000E+00	.7170E-03	.1205E-01	.3414E-03	.2462E-08
3	.1838E-01	.2392E-02	.2719E-08	.2250E-02	.1619E-03	.1954E-02	.1270E-08	.1524E-03	.0000E+00	.0000E+00	.7140E-03	.1204E-01	.3379E-03	.2446E-08
4	.1838E-01	.2375E-02	.2513E-09	.2309E-02	.1604E-03	.1929E-02	.1263E-08	.1513E-03	.0000E+00	.0000E+00	.7060E-03	.1188E-01	.3251E-03	.2392E-08
5	.1838E-01	.2379E-02	.1983E-09	.2327E-02	.1604E-03	.1867E-02	.2499E-08	.1523E-03	.0000E+00	.0000E+00	.7045E-03	.1140E-01	.2932E-03	.2281E-08
6	.1216E-01	.1543E-02	.1183E-09	.3809E-03	.1061E-03	.1127E-02	.1516E-08	.9226E-04	.0000E+00	.0000E+00	.4249E-03	.6896E-02	.1764E-03	.1365E-08
7	.1216E-01	.1562E-02	.1154E-09	.1050E-03	.1061E-03	.1102E-02	.1485E-08	.9031E-04	.0000E+00	.0000E+00	.4154E-03	.6743E-02	.1722E-03	.1332E-08
8	.1216E-01	.1570E-02	.1149E-09	.2970E-04	.1061E-03	.1096E-02	.1478E-08	.8983E-04	.0000E+00	.0000E+00	.4131E-03	.6707E-02	.1713E-03	.1324E-08
9	.1216E-01	.1572E-02	.1156E-09	.8442E-05	.1061E-03	.1096E-02	.1477E-08	.8981E-04	.0000E+00	.0000E+00	.4132E-03	.6707E-02	.1715E-03	.1326E-08
10	.1216E-01	.1572E-02	.1196E-09	.2390E-05	.1061E-03	.1101E-02	.1480E-08	.9007E-04	.0000E+00	.0000E+00	.4150E-03	.6733E-02	.1726E-03	.1336E-08
11	.1216E-01	.1569E-02	.1352E-09	.6646E-06	.1061E-03	.1113E-02	.1490E-08	.9076E-04	.0000E+00	.0000E+00	.4196E-03	.6800E-02	.1747E-03	.1361E-08
12	.1216E-01	.1564E-02	.1860E-09	.1750E-06	.1061E-03	.1141E-02	.1513E-08	.9250E-04	.0000E+00	.0000E+00	.4312E-03	.6945E-02	.1770E-03	.1420E-08
13	.1216E-01	.1552E-02	.3365E-09	.3767E-07	.1061E-03	.1177E-02	.1634E-08	.1006E-03	.0000E+00	.0000E+00	.4745E-03	.7013E-02	.1644E-03	.1507E-08
14	.8189E-05	.1063E-05	.2240E-12	.2535E-10	.2522E-10	.7871E-06	.1093E-11	.6725E-07	.0000E+00	.0000E+00	.3173E-06	.4687E-05	.1099E-06	.1007E-11
15	.8253E-05	.4509E-05	.4448E-12	.7462E-10	.1864E-10	.1355E-05	.1690E-11	.1076E-06	.0000E+00	.0000E+00	.5607E-06	.6854E-05	.1704E-06	.1980E-11

VAPOR COMPONENT FLOWS

SG#	SOLV	H2O	H2S	SO2	SULD	CO2	N2	C1	H2	CO	C2	C3	C4	C5+
1	.9750E-05	.3103E-03	.1626E-03	.3680E-04	.0000E+00	.1913E-01	.1316E-05	.3587E-01	.0000E+00	.0000E+00	.3694E-01	.9320E-01	.1165E-02	.1932E-07
2	.1218E-04	.1946E-03	.9430E-06	.2985E-03	.0000E+00	.1912E-01	.1316E-05	.3587E-01	.0000E+00	.0000E+00	.3694E-01	.9319E-01	.1162E-02	.1931E-07
3	.1244E-04	.1789E-03	.5119E-08	.3566E-03	.0000E+00	.1910E-01	.1316E-05	.3587E-01	.0000E+00	.0000E+00	.3693E-01	.9304E-01	.1149E-02	.1925E-07
4	.1281E-04	.1829E-03	.4799E-09	.3751E-03	.0000E+00	.1903E-01	.1317E-05	.3587E-01	.0000E+00	.0000E+00	.3693E-01	.9256E-01	.1117E-02	.1914E-07
5	.1293E-04	.1852E-03	.3778E-09	.3809E-03	.0000E+00	.1829E-01	.2579E-05	.3581E-01	.0000E+00	.0000E+00	.3665E-01	.8805E-01	.1000E-02	.1823E-07
6	.1448E-04	.2035E-03	.3748E-09	.1050E-03	.0000E+00	.1827E-01	.2579E-05	.3581E-01	.0000E+00	.0000E+00	.3664E-01	.8790E-01	.9959E-03	.1819E-07
7	.1488E-04	.2113E-03	.3743E-09	.2970E-04	.0000E+00	.1826E-01	.2579E-05	.3581E-01	.0000E+00	.0000E+00	.3664E-01	.8786E-01	.9950E-03	.1818E-07
8	.1496E-04	.2135E-03	.3746E-09	.8451E-05	.0000E+00	.1826E-01	.2579E-05	.3581E-01	.0000E+00	.0000E+00	.3664E-01	.8786E-01	.9952E-03	.1819E-07
9	.1492E-04	.2133E-03	.3768E-09	.2398E-05	.0000E+00	.1827E-01	.2579E-05	.3581E-01	.0000E+00	.0000E+00	.3664E-01	.8789E-01	.9963E-03	.1820E-07
10	.1477E-04	.2112E-03	.3880E-09	.6728E-06	.0000E+00	.1828E-01	.2579E-05	.3581E-01	.0000E+00	.0000E+00	.3664E-01	.8795E-01	.9984E-03	.1822E-07
11	.1441E-04	.2059E-03	.4328E-09	.1832E-06	.0000E+00	.1831E-01	.2579E-05	.3581E-01	.0000E+00	.0000E+00	.3666E-01	.8810E-01	.1001E-02	.1828E-07
12	.1358E-04	.1937E-03	.5771E-09	.4580E-07	.0000E+00	.1834E-01	.2579E-05	.3582E-01	.0000E+00	.0000E+00	.3670E-01	.8817E-01	.9881E-03	.1837E-07
13	.1103E-04	.1573E-03	.9223E-09	.8211E-08	.0000E+00	.1717E-01	.2578E-05	.3572E-01	.0000E+00	.0000E+00	.3623E-01	.8116E-01	.8238E-03	.1686E-07
14	.1110E-04	.1608E-03	.9181E-09	.8258E-08	.0000E+00	.1717E-01	.2578E-05	.3572E-01	.0000E+00	.0000E+00	.3623E-01	.8116E-01	.8239E-03	.1686E-07
15	.2843E-05	.1563E-03	.9052E-09	.8178E-08	.0000E+00	.1717E-01	.2578E-05	.3572E-01	.0000E+00	.0000E+00	.3622E-01	.8115E-01	.8237E-03	.1686E-07

```
% SULFUR SATURATION ON TRAY    1 =    0.2337894812E+03 (SOLMAX=    0.4783775196E-01)
% SULFUR SATURATION ON TRAY    2 =    0.2123581520E+02 (SOLMAX=    0.4925060052E-01)
% SULFUR SATURATION ON TRAY    3 =    0.8451948107E+01 (SOLMAX=    0.4989445181E-01)
% SULFUR SATURATION ON TRAY    4 =    0.8231382140E+01 (SOLMAX=    0.5099880510E-01)
% SULFUR SATURATION ON TRAY    5 =    0.8184984286E+01 (SOLMAX=    0.5203362981E-01)
% SULFUR SATURATION ON TRAY    6 =    0.8682297550E+01 (SOLMAX=    0.5334260864E-01)
% SULFUR SATURATION ON TRAY    7 =    0.8803147639E+01 (SOLMAX=    0.5366256561E-01)
% SULFUR SATURATION ON TRAY    8 =    0.8844056405E+01 (SOLMAX=    0.5368538152E-01)
% SULFUR SATURATION ON TRAY    9 =    0.8875165250E+01 (SOLMAX=    0.5353950121E-01)
% SULFUR SATURATION ON TRAY   10 =    0.8929432802E+01 (SOLMAX=    0.5314919468E-01)
% SULFUR SATURATION ON TRAY   11 =    0.9050982316E+01 (SOLMAX=    0.5224420763E-01)
% SULFUR SATURATION ON TRAY   12 =    0.9349463986E+01 (SOLMAX=    0.5016826908E-01)
% SULFUR SATURATION ON TRAY   13 =    0.1047182509E+02 (SOLMAX=    0.4453567932E-01)
% SULFUR SATURATION ON TRAY   14 =    0.3722274865E-02 (SOLMAX=    0.4450814513E-01)
% SULFUR SATURATION ON TRAY   15 =    0.4447579653E-02 (SOLMAX=    0.1921285145E-01)
```

This report was done with support from the Department of Energy. Any conclusions or opinions expressed in this report represent solely those of the author(s) and not necessarily those of The Regents of the University of California, the Lawrence Berkeley Laboratory or the Department of Energy.

Reference to a company or product name does not imply approval or recommendation of the product by the University of California or the U.S. Department of Energy to the exclusion of others that may be suitable.

LAWRENCE BERKELEY LABORATORY
TECHNICAL INFORMATION DEPARTMENT
UNIVERSITY OF CALIFORNIA
BERKELEY, CALIFORNIA 94720