UC-4

LBL-22741
Preprint

Lawrence Berkeley Laboratory

UNIVERSITY OF CALIFORNIA

Materials & Molecular Research Division

FEB 20 1987

Submitted to Journal of the American Chemical Society

THE STRUCTURES AND ENERGIES OF MAIN GROUP METAL FORMYL COMPLEXES. THE MECHANISM OF THE REACTION OF LiH WITH CO. AN AB INITIO STUDY.

S. Gronert, A. Streitwieser, Jr., and M. Halpern

December 1986

For Reference

Not to be taken from this room

LBL-22741

Prepared for the U.S. Department of Energy under Contract DE-AC03-76SF00098

DISCLAIMER

This document was prepared as an account of work sponsored by the United States Government. While this document is believed to contain correct information, neither the United States Government nor any agency thereof, nor the Regents of the University of California, nor any of their employees, makes any warranty, express or implied, or assumes any legal responsibility for the accuracy, completeness, or usefulness of any information, apparatus, product, or process disclosed, or represents that its use would not infringe privately owned rights. Reference herein to any specific commercial product, process, or service by its trade name, trademark, manufacturer, or otherwise, does not necessarily constitute or imply its endorsement, recommendation, or favoring by the United States Government or any agency thereof, or the Regents of the University of California. The views and opinions of authors expressed herein do not necessarily state or reflect those of the United States Government or any agency thereof or the Regents of the University of California.

The Structures and Energies of Main Group Metal Formyl Complexes. The Mechanism of the Reaction of LiH with CO. An *Ab Initio* Study.

Scott Gronert, Andrew Streitwieser, Jr. and Mitchell Halpern

Materials and Molecular Research Division
Lawrence Berkeley Laboratory and Department of Chemistry
University of California, Berkeley, California 94720

The Berkeley Work was supported in part by the Director, Office of Energy Research, Office of Basic Energy Sciences, Chemical Sciences Division of the U. S. Department of Energy, under Contract No. DE-AC03-76SF00098.

The Structures and Energies of Main Group Metal Formyl Complexes. The Mechanism of the Reaction of LiH with CO. An *Ab Initio* Study.

Elmar Kaufmann and Paul von Ragué Schleyer*
Institut für Organische Chemie der Friedrich-Alexander-Universität Erlangen-Nürnberg, D-8520 Erlangen, Federal Republic of Germany.

Scott Gronert, Andrew Streitwieser, Jr.* and Mitchell Halpern
Materials and Molecular Research Division, Lawrence Berkeley Laboratory and Department of Chemistry, University of California, Berkeley, California 94720.

Abstract

Formyl complexes, MCHO, of first- and second-row metals and metal hydrides (M=Li, BeH, BH_2, Na, MgH, AlH_2) have been investigated by means of *ab initio* calculations (MP2/6-31+G*//6-31G* and lower levels). Both η^2 (i. e. bridged) and η^1 coordination of the metals are found: the former is favored by larger electronegativity differences between the metal and the formyl carbon. Such η^2 coordination is characterized by rather long CO bonds, significant alkoxy-carbene character in the formyl group, and a bridging energy of about 7-8 kcal/mol for M=BeH and AlH_2. The formyl carbon-metal interactions are predominantly ionic. The insertion reaction of CO into the LiH bond, a model for similar processes in transition metal compounds, proceeds *via* an initially formed linear coordination complex, HLi-CO, and a three-membered ring transition structure. The latter lies energetically about 19 kcal/mol above the complex. The

overall activation and reaction energies from LiH + CO to the formyllithium product, LICHO, are +13 and -3 kcal/mol, respectively. The energies of the reaction of the other metal hydrides with CO to form the corresponding formyl compounds are all endothermic by about 1-7 kcal/mol. Thus, with the exception of M=Li, all the formyl complexes, MCHO, are thermodynamically unstable, but may be observable at lower temperatures if the activation energies for the loss of CO are comparable to that of LiCHO (about 16 kcal/mol). These conclusions are expected to apply to all metal carbonyl compunds with high ionic character such as early transition metals, actinides and lanthanides.

Introduction

There has been a continuing interest in the Fischer-Tropsch and related processes as synthetic routes to petroleum products.[1] Initially developed in the 1920's, the Fischer-Tropsch method involves the reaction of CO with H_2 over a metal catalyst to form a mixture of hydrocarbons and related oxygenated compounds. Proposed mechanisms for the Fischer-Tropsch reaction involve CO insertion into a metal hydride on the surface of the catalyst resulting in a formyl-metal intermediate.[1,2] In order to understand this initial step further, many groups have synthesized and characterized model formyl-metal complexes.[3-10] The subject has been reviewed by Gladysz.[11]

Many η^1 formyl-transition metal complexes have now been synthesized employing Mo, Mn, Re, Ru, Rh, Os, and Ir as the metals: that is, middle-to-late transition metals. Nevertheless, the direct reaction of CO with the corresponding metal hydrides has rarely resulted in the desired formyl complex. Indeed, many such formyl-metal compounds decompose *via* a decarbonylation mechanism. A rare example of a successful CO insertion comes from Wayland who has treated CO with rhodium octaethylporphyrin hydride to form the corresponding formyl complex.[5] In general, formyl-transition metal complexes have been generated, not by insertion of CO, but by the reaction of cationic metal carbonyls with borohydrides.[11]

These neutral η^1 formyl-metal complexes exhibit some unusual properties. Most notably, they have relatively low C=O stretching frequencies that range from about 1530-1630 cm^{-1}. For example, $Re(\eta^5\text{-}C_5H_5)(PPh_3)(NO)(CHO)$ and $Os(CHO)(H)(CO)_2(PPh_3)_2$ have C=O stretches of 1558-1566 and 1601 cm^{-1}, respectively.[8,9] Crystal structures of several η^1 formyl-transition metal complexes are known,

and they exhibit varying C=O bond lengths (1.19-1.22 Å;[12,13] the C=O bond length in formaldehyde is 1.21 Å). These results strongly suggest an important contribution from an alkoxy-carbene resonance form in the formyl moiety, 1, with significant carbon-metal covalency that probably includes back-bonding from filled metal d-orbitals.

In contrast, direct CO insertions are now common for early transition metals and cyclopentadienylactinide compounds. Bercaw has suggested an initial CO insertion in the reaction of $(\eta^5\text{-}C_5Me_5)_2ZrH_2$ with CO to form a transient formyl-zirconium intermediate.[14,15] Marks[16] has demonstrated even faster reversible addition of CO to alkoxy-bis(pentamethylcyclopentadienyl)thorium hydrides to generate formyl-thorium complexes. Moreover, η^2 coordination to the formyl group appears implicated in these compounds. Bercaw has suggested that his intermediate is possibly stabilized by η^2 coordination of the formyl ligand to the metal. In Marks' thorium compounds, spectrometric data, such as the low C=O frequencies of about 1477 cm^{-1}, imply η^2 coordination of the formyl ligand to the metal. Since this represents one of the very few examples of CO directly inserting into a metal hydride to form a formyl-metal complex, it appears that the η^2 coordination may provide a driving force for such insertions.

Insertion reactions of CO are also known for some main group elements. Trialkylboranes react readily with CO to give either alcohols, aldehydes, or ketones depending on the reaction conditions.[17] Hillman has proposed an insertion mechanism that is similar to mechanisms proposed for transition metal complexes.[18] After CO coordinates with the electron-deficient boron, one of the alkyl groups migrates to give an acyl-borane intermediate, $R_2B\text{-}C(O)R$.

A second migration is assisted by coordination of the carbonyl oxygen to boron. Finally, a third migration may occur to give a boronic anhydride, $OB-CR_3$. Therefore, although their reactivities may differ, acyl-boranes and acyl-transition metal complexes may be formed by similar paths. Furthermore, oxygen assistance and possible η^2 coordination may play an important role with acyl-borane complexes.

Several aspects of formyl-metal chemistry are of theoretical interest. Bonding to early transition metals and to actinides tends to be more ionic and η^2 coordination to the formyl group may be typical of more ionic bonding. Such bonding characteristics can readily be given by an ab initio study with small model systems and reasonably large basis sets. Moreover, a study of formyl-metal compounds may have direct application to more common acyl-metal analogs where η^2 coordination is well documented.[19] Crystal structures of acyl-titanium, zirconium, and ruthenium complexes show coordination of both the oxygen and the carbon of the acyl ligand to the metal. Such η^2 acyl-metal complexes exhibit low C=O stretching frequencies (1530-1600 cm^{-1}). Inherent in these structures are extremely small O-C-M angles of approximately 65°.[20]

In an important related field, there has been much interest in the synthetic utility of acyllithium complexes. Seyferth and coworkers, extending earlier investigations of other groups,[21-23] have developed the method of direct nucleophilic acylations[24] (aroylations seem to be less satisfactory[25]). The products, in most cases, are consistent with the generation of a formal "acyl anion" intermediate which then reacts with electrophiles, e.g. aldehydes, ketones, and esters. Acyllithiums, however, were not observed directly, presumably due to their high reactivity.[26] Instead, these species are generated

and used in situ. Thus, acyl anions are important synthons, and direct utilization of such intermediates shows promise.

There have been previous studies of the formyl anion, but its metal coordination has yet to be fully studied.[27-29] Since formyl and acyl anions have adjacent carbon and oxygen lone pairs available for coordination, either η^2 or η^1 coordination is possible (**2** and **3**, respectively). Moreover, if the formyl or acyl anion's negative charge is transferred to the oxygen by polarization of the pi-MO then considerable alkoxy-carbene character should result. Finally, the η^2 formyl and acyl-metal interactions may be characterized as either a metal d-orbital overlap with the carbon and oxygen lone pairs, or as an ionic attraction between the cationic metal and the anion.

The present work focuses on formyl complexes of first and second row metals and metal hydrides. The first and second row metals cover a wide range of electronegativities; therefore, they should provide a useful basis for developing trends in formyl-metal complexation, especially those related to ionic character. These model systems are not expected to show the varied chemistry of transition metals; in particular, these main group metals generally do not employ d-orbitals in bonding, and will therefore not provide models of transition metal d-orbital effects. Nevertheless, they should provide a valuable indication of the effects of metal substitution on formaldehyde, and formyl-lithium compounds to be discussed should be excellent models for the synthetically useful acyl-lithium complexes.

For the smallest system, the lithium formyl complex, a more extensive study was undertaken to check the performance of basis sets for geometries and relative energies and correlation energies. In this

case two additional structures have been considered: a CO molecule attached to lithium hydride by C and O coordination, respectively (structures **4** and **5**). **4** is a model for a simple metal carbonyl, **5** for a hypothetical "isocarbonyl" complex.

Calculations

Computations were carried out using Vax 11/750, 11/780, CDC 7600, and CYBER 845 computers with Gamess,[30] Gaussian 80,[31] or Gaussian 82[32] quantum mechanical programs. Several basis sets were employed: 3-21+G, 6-31+G*, and 6-311+G* denote the standard 3-21G,[33] 6-31G*,[34] and 6-311G*[35] basis sets with additional diffuse sp orbitals on carbon and oxygen.[36] The 3-21G* basis set is augmented with d-functions on all non-hydrogen atoms.[37]

All structures were optimized with the 3-21+G (or 3-21G), 3-21G*, and 6-31G* basis sets. Single point calculations on these geometries were carried out with inclusion of correlation corrections at the Møller-Plesset[38] second order level (MP2/6-31G* and MP2/6-31+G*). Higher level calculations were performed for the lithium systems: Optimizations at 6-31G* and 6-31+G* were followed by single points (MP4/6-31+G*, MP2/6-311G*, and MP2/6-311+G*). For these compounds also zero point vibrational energies (at 6-31G*, scaled by 0.9)[39] were obtained.

As has been noted before,[36] optimizations with and without diffuse functions (e.g. 3-21G and 3-21+G) give similar results. That the inclusion of diffuse functions has little effect on geometry also is shown by comparing the 6-31G*, and 6-31+G* results in Table 2. In contrast, d-functions have a larger effect (3-21G or 3-21+G vs. 3-21G*, Tables 1 and 2). There are also significant differences between

the 3-21G* and 6-31G* results, and only the parameters obtained at the highest levels employed are discussed (6-31+G* for the lithium systems, Table 2).

For the contour maps, wavefunctions were projected into a planar density grid by the program PROJ.[40] These projected electron density grids were divided into molecular fragments by a program designed to find relative minima in the electron density. These minimum density demarkations of such projected functions are vertical curtains that approximate the virial boundaries of R. F. W. Bader[41] and the derived integrated fragment populations approximate the true integrations over Bader "basins". Bader has shown that these virial boundaries have important properties and that the integrated populations are uniquely defined and unambiguous atom populations. Our populations are faster to compute and are expected to be qualitatively correct, particularly when electron densities drop to such low levels as between electropositive metals and other atoms. The electron density grids were converted to contour maps and integrated over molecular fragments using previously described programs.[42] The integration of the projected density grid over a molecular fragment will be referred to as the fragment population.

Results

Geometries and Bonding. All structures were found to be planar except formylborane and formylalane which had C_s symmetry and hydrogens on both sides of the mirror plane. The corresponding alternatives with all atoms in the same plane are higher in energy and correspond to transition structures for rotation of the BH_2 and AlH_2 groups, respectively.

By examining the O-C-M angles and oxygen-metal distances (Tables 1, 2) it is apparent that LiCHO, HBeCHO, NaCHO, HMgCHO, and H_2AlCHO adopt η^2 coordination, **2**. All of these structures are quite similar. The long C=O bonds (1.24-1.25 Å: 1.18 Å in H_2CO at the same levels of theory) indicate a significant perturbation of the carbonyl group. As a test, formyllithium was optimized with correlation corrections at the MP2/6-31G* level.[43] In Table 2, it can be seen that correlation has rather minor effects although the C=O bondlength is somewhat lengthened compared to the Hartree-Fock structures. All of the η^2 coordinated metals carry large positive charges (ca. +0.85); the interaction with the negatively charged oxygen provides electrostatic stabilization. The charge on the metal is calculated by integrating the projected electron density within a line of demarkation as shown in Figure 1 for formyllithium. The demarkation line represents the gradient minimum of electron density between the metal fragment and the rest of the molecule. In accordance with the ionic radii, the oxygen-metal bonds are shorter than the corresponding carbon-metal bonds. Inherent in the η^2 structures are extremely small O-C-M angles (ca. 65°); this restricts the covalent overlap between the metal and carbon. These calculated structures parallel those in crystal structures of η^2 acyl-metal complexes. Fachinetti et al.[20] have reported O-C-M angles of 78.6° and C=O bond lengths of 1.21 Å with their acyl-zirconium complexes. Zirconium is much larger than any of the metals studied here. In a corresponding ionic model, the greater distance to the metal would result in a larger O-C-M angle, and would weaken the perturbation of the carbonyl group.

For HBeCHO and H_2AlCHO, η^1 coordinated local minima also could be

located in C_s-symmetry. At 6-31G* only a η^2 isomer survives for H_2AlCHO; the open form found at 3-21+G closes upon further optimization to give the bridged structure.

Optimization of formylborane led to a η^1 coordinated structure, 3, with the normal carbonyl bond length, 1.20 Å, which characterizes all of the η^1 species. The moderate positive charge on the borane fragment (+0.58) implies a strong covalent contribution to the carbon-boron bond[44] resulting from the small electronegativity difference between these elements. A low metal fragment charge also reduces the driving force for coordination to the oxygen. Therefore, although the oxygen may assist in the alkyl migrations involved in reactions of trialkylboranes with CO, it does not appear that η^2 coordinated acyl-borane intermediates are present.

It is useful to evaluate the energy differences between η^2 and η^1 structures. For HBeCHO this can be done directly, since η^1 and η^2 isomers are both local minima. The MP2/6-31+G*//6-31G* energy difference is 8.3 kcal/mol. For H_2AlCHO, two comparisons with the η^2 energies can be made. The η^2 form is 6.7 kcal/mol lower in energy at MP2/6-31+G*//6-31G* than the η^1 isomer with the AlH_2 group rotated into the plane. Alternatively, the MP2/6-31+G*//3-21+G single point energy for the perpendicular η^1 form gives nearly the same η^1-η^2 difference, 4.9 kcal/mol (Table 3).

In the η^2 formyl complexes, the carbonyl bonds are rather long (ca. 1.25 Å) and the oxygen carries a large negative charge (ca. -1.3). As a reference, formaldehyde has a C=O bond length of 1.18 Å and an oxygen charge of -1.03 at the 3-21G* level;[45] therefore, there appears to be a contribution from an alkoxy-carbene resonance form, 1, in the formyl ligand. However, since this resonance

form is the result of a pi-bond polarization, it is more useful to examine the population effects in the pi-M.O. The contour representations of the pi-MO's of formaldehyde and formylberyllium hydride in Figure 2 show that the pi-bond of the formyl-metal complex is more highly polarized than that of formaldehyde. Moreover, integration over the oxygen fragments of the pi-M.O.'s yields populations of 1.73 and 1.56 electrons for formylberyllium hydride and formaldehyde, respectively. This shows that much of the increase in the oxygen electron density of the formyl-metal complex is the result of a pi-bond polarization; hence the formyl anion in these complexes has significant alkoxy-carbene character.

If the interaction between the lithium cation and the formyl anion were completely ionic, then the 2s (and 2p) shell on lithium would be empty. By limiting lithium to a basis set that contains only a 1s shell (3-21G with valence shells removed), the lithium can be forced to interact completely ionically. The structure of formyllithium, optimized using a 3-21G* basis set with only a 1s shell on lithium, is compared in Table 4 along with the 3-21G* results. This drastic change in basis sets results in only small changes in geometry. Thus, the η^2 geometry is indeed given by a totally ionic model. Previous work[40,41,46] indicates that the carbon-lithium bond in general is largely ionic. Since the other η^2 formyl-metal complexes have structures and electron distributions similar to formyllithium, their carbon-metal bonds are also expected to be dominated by ionic interactions.

Finally, the atomic populations in the formyl-metal systems can also be considered using Reed, Weinstock, and Weinhold's Natural

Populations.[46] Natural Populations are atomic orbital-like basis populations that are relatively basis set independent. As a test, these atomic populations were calculated for formyllithium, 2, at the 6-31G* level. The lithium population is calculated as 2.12 electrons with both our integrated populations and Reed et al.'s Natural Populations (Table 2). This result points out the utility of the Natural Populations in organolithium compounds.[46] However, there is a difference in the oxygen populations. Such differences between real space (integrated populations) and the Hilbert space (Natural Populations) partitions appear to be general for covalent bonds between atoms of different electronegativities.[44]

The Mechanism of LiH/CO Reactions.[47] The course of the reaction of RLi with CO was investigated theoretically by exploring the potential energy surface of the smallest system, HLi/CO, at rather high levels. Our earlier calculations on related mechanisms show that HLi is a good model for CH_3Li and larger $(RLi)_n$ systems.[48]

Lithium hydride and carbon monoxide first form a complex. There are two possibilities: lithium attached to oxygen or to carbon in linear geometries. Both complexes as well as the addition product, LiCHO, are true minima on the 6-31G* potential hypersurface (no imaginary frequencies). The relative energies depend on the level of theory employed (Table 5). HLi-OC is slightly more stable than HLi-CO with larger basis sets, and also is the global minimum at the Hartree-Fock level. Inclusion of electron correlation corrections, however, reverses the relative stability of the two linear complexes. This is undoubtedly due to the known change in the CO dipole moment direction at correlated levels.[49] At MP2/6-311+G*//6-31+G*, HLi-CO is more stable than HLi-OC by 3.4 kcal/mol, but the addition product, LiCHO, is 2.8

kcal/mol lower in energy. These relative energies, however, refer to the hypothetical motionless states. Correction for zero point vibrational energies (at 6-31G*, scaled by 0.9)[39] disfavors the addition product by about 4.4 kcal/mol relative to the linear complexes. Our final estimate (referring to 0 K) predicts the linear complex HLi-CO to be the global minimum. HLi-OC and formyllithium, LiCHO, are less stable by 2.1 and 3.1 kcal/mol, respectively. Nevertheless, all of these isomers are very close in energy.

We have located the transition structure, **6** (one imaginary frequency) leading from HLi-CO to formyllithium, LiCHO, at 3-21G, 6-31G*, and 6-31+G* levels. Our best theoretical estimate of the activation energy is about 19 kcal/mol (Table 5). Similar three-membered ring transition structures for alkyl migration to coordinated carbon monoxide have been proposed in transition metal chemistry,[50] although it is known that the migration is facilitated by adding CO, donor ligands, or Lewis acids.[51-53] Isotope labelling shows that the CO <u>cis</u> to the incoming CO forms the acyl ligand.[51] Thus the additional CO molecule (or donor ligand) is not directly involved in the alkyl migration. The additional CO only lowers the activation energy somewhat by occupying a further coordination site at the metal, but does not alter the mechanism. Hence, our mechanism for the formation of LiCHO may be a good model for CO-insertions in general.

Recently, Morokuma[47a] has investigated theoretically the insertion of carbonyl into the methyl-metal bond of a model palladium complex. The transition structure for this process also is a three-membered ring and is similar to that in our lithium system. Both indicate that the methyl (or hydride) migrates as the metal-CO axis

remains almost linear during the transformation to the transition state.

Energy Evaluations. The relative energies of the other formyl systems can be assessed by means of equations (1) and (2). Equation (1) gives the energy involved by inserting CO into the MH bond,

$$MH + CO = MCHO \qquad (1)$$

$$CH_3M + HCHO = MCHO + CH_4 \qquad (2)$$

equation (2) evaluates the stabilization energy of the metal ligands bound to the formyl with respect to CH_3M as a standard. Because of its isodesmic character, equation (2) is not as sensitive as equation (1) to the level of theory employed; the latter is heavily affected by basis set superposition error (BSSE)[54] which is largely eliminated when diffuse and polarization basis sets are employed (see Table 6).

For M=Li we have evaluated equation (1) at rather high levels (Table 5). The calculated energies vary somewhat, but the values at MP4/6-31+G*//6-31+G* and at MP2/6-311+G*//6-31+G* are reasonably close to the results obtained at the highest level used for all other metals (MP2/6-31+G*//6-31G*). This level, therefore, should be a good basis for comparison. Only the formation of the η^2 coordinated species has favorable energies in equation (1), and lithium is by far the best. This may be due to the small radius of the lithium cation resulting in a very effective electrostatic interaction with the oxygen of the carbonyl group. The reaction energies of equations (1) and (2) parallel one another; both reflect the interaction of the metals with the carbonyl group. There are a few exceptions, but most of the reaction energies for both equations (1) and (2) are within the 0 ± 5 kcal/mol range.

Conclusions

Formyl complexes with η^2 geometries involving first- and second-row metals and metal hydrides have been demonstrated. The η^2 coordination does not require metal d-orbital or even p-orbital involvement and is best described as an ionic interaction between a cationic metal center and the lone pairs on carbon and oxygen. The large charge transfer to oxygen and the C=O bond lengthening in the η^2 complexes confirms the presence of an alkoxy-carbene resonance form in the formyl ligand, 1. Finally, η^2 coordination can provide a chemically significant amount of stabilization and should be most important in systems where the ionic nature of the interaction is large.

Since the activation energies for the addition of CO to LiH and loss of CO from LiCHO are only 19.3 and 16.2 kcal/mol, respectively, for the monomeric species in the gas phase, LiCHO can clearly serve as a catalyst or intermediate for further reactions. Such catalytic activity is well known with transition metals.[55] Since the overall reaction is almost thermoneutral, the equilibrium may well be promoted by solvation or aggregation affects. These findings may encourage attempts to isolate derivatives of such lithium-carbonyl species. The other metal-formyl complexes are indicated to be thermodynamically unstable with respect to loss of CO, but also may be stable kinetically if decomposition barriers are sufficiently large.

The present conclusions are expected to apply generally to any metal carbonyl bonding with high ionic character; that is, η^2 coordination as a characteristic even of wholly ionic bonding is more important than may have been appreciated in the past. Examples of metals with high electropositive character are the early transition

metals, actinides and lanthanides. The η^2 coordination observed for acyl-complexes of these metals is a normal consequence of ionic bonding and does not necessarily represent unusual bonding modes.[56] Late transition metal compounds are expected to show more covalent character with d-orbital involvement.

Acknowledgement

This work was supported at Erlangen by the Fonds der Chemischen Industrie and the Deutsche Forschungsgemeinschaft. The work at Berkeley was supported by the Director, Office of Energy Research, Office of Basic Energy Services, Chemical Sciences Division of the U.S. Department of Energy, under contract No. DE-AC0376SF00098. A. S. also thanks the Humboldt Foundation, Bonn, for travel support to Erlangen in preparation of this manuscript.

References

1. Blackborow, J. R.; Daroda, R. J.; Wilkinson, G. Coord. Chem. Rev. 1982, 43, 17. Herrmann, W. A. Angew. Chem. Int. Ed. Engl. 1982, 21, 117. Masters, C. Adv. Organomet. Chem. 1979, 17, 61.

2. Henrici-Olivé, G.; Olivé, S. Angew. Chem. Int. Ed. Engl. 1976, 15, 136.

3. Casey, C. P.; Neumann, S. M. J. Am. Chem. Soc. 1976, 98, 5395. Casey, C. P.; Andrews, M. A.; Rinz, J. E. J. Am Chem. Soc. 1979, 101, 741. Casey, C. P.; Neumann, S. M.; Andrews, M. A.; McAlister, D. R. Pure Appl. Chem. 1980, 52, 625.

4. Thorn, D. L. J. Am. Chem. Soc. 1980, 102, 7109.

5. Wayland, B. B.; Woods, B. A. J. Chem. Soc., Chem Commun. 1981, 700.

6. Wayland, B. B.; Woods, B. A.; Pierce, R. J. Am. Chem. Soc. 1982, 104, 302.

7. Tam, W.; Wong, W.-K.; Gladysz, J. A. J. Am. Chem. Soc. 1979, 101, 1589.

8. Wong, W.-K.; Tam, W.; Strouse, C. E.; Gladysz, J. A. J. Chem. Soc., Chem. Commun. 1979, 530.

9. Brown, K. L.; Clark, G. R.; Headford, C. E. L.; Marsden, K.; Roper, W. R. J. Am. Chem. Soc. 1979, 101, 503.

10. Casey, C. P.; Andrews, M. A.; McAlister, D. R. J. Am. Chem. Soc. 1979, 101, 3371.

11. Gladysz, J. A. Adv. Organomet. Chem. 1982, 20, 1.

12. Smith, G.; Cole-Hamilton, D. J.; Thornton-Pett, M.;

Hursthouse, M. B. J. Chem. Soc. Dalton Trans., 1983, 2501, and references therein.

13. Most recently, a formylruthenium compound has been described with a normal IR stretching frequency (1601 cm^{-1}), but a remarkably short CO bondlength of 1.106 Å: Nelson, G. O.; Sumner, C. E. Organometallics 1986, 5, 1983.

14. Wolczanski, P. T.; Threlkel, R. S.; Bercaw, J. E. J. Am. Chem. Soc. 1979, 101, 218.

15. Wolczanski, P. T.; Bercaw, J. E. Acc. Chem. Res. 1980, 13, 121.

16. Fagan, P. J.; Moloy, K. G.; Marks, T. J. J. Am. Chem. Soc. 1981, 103, 6959. Moloy, K. G.; Marks, T. J. J. Am. Chem. Soc. 1984, 106, 7051.

17. Brown, H. C. Acc. Chem. Res. 1969, 2, 65 and references therein.

18. Hillman, M. E. D. J. Am. Chem. Soc. 1962, 84, 4715. Hillman, M. E. D. J. Am. Chem. Soc. 1963, 85, 982. Hillman, M. E. D. J. Am. Chem. Soc. 1963, 85, 1626.

19. There is a crystal structure of a binuclear complex which shows a η^2 coordinated formyl ligand, but the carbonyl is highly perturbed. Churchill, M. R.; Wasserman, H. J. J. Chem. Soc., Chem. Commun. 1981, 274.

20. (a) Fachinetti, G.; Floriani, C.; Marchetti, F.; Merlino, S. J. Chem. Soc., Chem. Commun. 1976, 522.; (b) Fachinetti, G.; Floriani, C. J. Chem. Soc., Dalton Trans. 1977, 2297.; (c) Fachinetti, G.; Fochi, G.; Floriani, C. J. Chem. Soc., Dalton Trans. 1977, 1946.

21. Jutzi, P; Schröder, F.-W. J. Organomet. Chem. 1970, 24, 1,

C43.

22. Trzupek, L. S.; Newirth, T. L.; Kelly, E. G.; Sbarbati, N. E.; Whitesides, G. M. J. Am. Chem. Soc. 1973, 95, 8118.

23. Nudelman, N. S.; Vitale, A. A. J. Organomet. Chem. 1983, 241, 143. Nudelman, N. S.; Ontumuro, P. J. Org. Chem. 1982, 47, 4347. Nudelman, N. S.; Perez, T. O. J. Org. Chem. 1983, 48, 134. Nudelman, N. S.; Perez, T. O., in press.

24. Seyferth, D.; Hui, R. C. J. Am. Chem. Soc. 1985, 107, 4551 and references therein.

25. Seyferth, D.; Wang, W.-L.; Hui, R.C. Tetrahedron Lett. 1984, 25, 1651.

26. The acetyl anion has been studied in the gas phase. Depuy, C. H.; Bierbaum, V. M.; Damrauer, R.; Soderquiest, J. A. J. Am. Chem. Soc. 1985, 107, 3385. For an experimental study of the formyl anion, see: Murray, K. K.; Miller, T. M.; Leopold, P. G.; Lineberger, W. C. J. Chem. Phys. 1986, 84, 2520.

27. For an examination of the parent and substituted formyl anions, see: Chandrasekhar, J.; Andrade, J. G.; Schleyer, P. v. R. J. Am. Chem. Soc. 1981, 103, 5612.

28. The energies of formyl coordination to nickel have been studied, but no geometries are given: Goddard, W. A.; Walch, S. P.; Rappe, A. K.; Upton, T. H. J. Vac. Sci. Technol. 1977, 14, 416. The C=O stretching frequency of formyllithium has been reported, but not the geometry: Bock, C. W.; Trachtman, M.; George, P. J. J. Comp. Chem. 1981, 2, 30.

29. For recent EHT studies of transition metal and actinide acyl complexes see: Tatsumi, K.; Nakamura, A.; Hofmann, P.;

Stauffert P.; Hoffmann, R. J. Am. Chem. Soc. 1985, 107, 4440. Tatsumi, K.; Nakamura, A.; Hofmann, P.; Hoffmann, R.; Moloy, K. G.; Marks, T. J. J. Am. Chem. Soc. 1986, 108, 4467. Hofmann, P.; Frede, M.; Stauffert, P.; Lasser, W.; Thewalt, U. Angew. Chem. 1985, 97, 693.

30. Dupuis, M.; Spangler, D.; Wondoloski, J. J. NRCC#QG01.

31. Singh, U. C.; Kollman, P. QCPE 1982, 2, 17.

32. GAUSSIAN 82, Release A: Binkley, J. S.; Frisch, M. J.; DeFrees, D. J.; Raghavachari, K.; Whiteside, R. A.; Schlegel, H. B.; Fluder, E. M.; Pople, J. A. Carnegie-Mellon University, 1983.

33. (a) First row elements: Binkley, J. S.; Pople, J. A.; Hehre W. J. J. Am. Chem. Soc. 1980, 102, 939. (b) Second row elements: Gordon, M. S.; Binkley, J. S.; Pople, J. A.; Pietro, W. J.; Hehre, W. J. J. Am. Chem. Soc. 1982, 104, 2797.

34. Hariharan, P. C.; Pople, J. A. Theor. Chim. Acta 1973, 28, 213. Dill, J. D.; Pople, J. A. J. Chem. Phys. 1975, 62, 2921. Francl, M. M.; Pietro, W. J.; Hehre, W. J.; Binkley, J. S.; Gordon, M. S.; Defrees, D. J.; Pople, J. A. J. Chem. Phys. 1982, 77, 3654.

35. Krishnan, R.; Binkley, J. S.; Seeger, R.; Pople, J. A. J. Chem. Phys. 1980, 72, 650.

36. Clark, T.; Chandrasekhar, J.; Spitznagel, G. W.; Schleyer, P. v. R. J. Comput. Chem. 1983, 4, 294. Also see: Spitznagel, G. W.; Clark, T.; Chandrasekhar, J.; Schleyer, P. v. R. J. Comput. Chem. 1982, 3, 363.

37. Pietro, W. J.; Francl, M. M.; Hehre, W. J.; DeFrees, D. J.;

Pople, J. A.; Binkley, J. S. J. Am. Chem. Soc. 1982, 104, 5039.

38. Pople, J. A.; Binkley, J. S.; Seeger, R. Int. J. Quantum Chem. Symp. 1976, 10, 1. Binkley, J. S.; Pople, J. A. Ibid. 1975, 9, 229 and references therein.

39. Pople, J. A.; Schlegel, H. B.; Krishnan, R.; DeFrees, D. J.; Binkley, J. S.; Frisch, M. J.; Whiteside, R. A.; Hout, R. F., Jr.; Hehre, W. J. Int. J. Quantum. Chem. Symp. 1981, 15, 269. DeFrees, D. J.; McLean, A. D. J. Chem. Phys. 1985, 82, 333. Also see: Komornicki, A.; Pauzat, F.; Ellinger, Y. J. Phys. Chem. 1983, 87, 3847.

40. Collins, J. B.; Streitwieser, A. Jr. J. Comput. Chem. 1980, 1, 81.

41. Bader, R. F. W.; Accts. Chem. Res. 1975, 8, 34; 1985, 18, 9. Bader, R. F. W.; MacDougall, P. J. J. Am. Chem. Soc. 1985, 107, 6788. Biegler-Koenig, F. W.; Bader, R. F. W.; Tang, T. H. J. Comput. Chem. 1982, 3, 317.

42. McDowell, R. S.; Grier, D. L.; Streitwieser, A. Jr. Comput. & Chem. 9, 1985, 165.

43. A referee has called attention to the flatness of the LiCHO potential energy surface around an Li-C-O angle of 110°, where his CASSCF calculations indicate a very shallow minimum. We thank the referee for his interest. Our SCF calculations indicate that if such a minimum exists, it would lie substantially above the bridged structure.

44. This modest positive charge is not an artifact of the η^1 structure. With a 3-21+G basis set, HBeCHO, HMgCHO, and

H_2AlCHO have η^1 coordinated local minima. Integration of the density about these η^1 coordinated metal fragments leads to a relatively large positive charge (ca +0.80).

45. Bachrach, S. M.; Streitwieser, A. Jr. Results to be published.

46. Reed, A. E.; Weinstock, R. B.; Weinhold, F. J. Chem. Phys. 1985, 83, 735. Reed, A. E.; Weinhold, F. J. Am. Chem. Soc. 1985, 107, 1919.

47. For theoretical studies on the CO insertion into transition metal-carbon bonds see: (a) Koga, N.; Morokuma, K. J. Am. Chem. Soc. 1985, 107, 7230. Koga, N.; Morokuma, K J. Am. Chem.Soc. 1986, 108, 6136. (b) ref. 27 (EHT calculations) and Saddei, D.; Freund, H.-J.; Hohlneicher, G. J. Organomet. Chem. 1980, 186, 63 (CNDO calculations).

48. Houk, K. N.; Rondan, N. G.; Schleyer, P. v. R.; Kaufmann, E.; Clark, T. J. Am. Chem. Soc. 1985, 107, 2821. Kaufmann, E.; Schleyer, P. v. R.; Houk, K. N.; Wu, Y. -D. J. Am. Chem. Soc. 1985, 107, 5560.

49. Hehre, W. J.; Radom, L.; Schleyer, P. v. R.; Pople, J. A. "Ab Initio Molecular Orbital Theory", Wiley, New York, 1986.

50. For a review see: Kuhlmann, E. J.; Alexander, J. J. Coord. Chem. Rev. 1980, 33, 195.

51. Noack, K.; Calderazzo, F. J. J. Organomet. Chem. 1967, 10, 101.

52. Whitesides, G. M.; Boschetto, D. J. J. Am. Chem. Soc. 1969, 91, 4313.

53. Butts, S. B.; Strauss, S. H.; Holt, E. M.; Stimson, R. E.; Alcock, N. W.; Shriver, D. F. J. Am. Chem. Soc. 1980, 102, 5093. Jablonski, C. R.; Wang, Y.-P. Inorg. Chem. 1982, 21,4037.

54. Kolos, W. Theor. Chim. Acta 1979, 51, 219, and references therein. Boys, S. F.; Bernardi, F. Mol. Phys. 1970, 19, 553.

55. Colquhoun, H. M.; Holton, J.; Thompson, D. J.; Twigg, M. V.,

"New Pathways for Organic Synthesis", Plenum Press, New York, 1984. "Mechanisms of Inorganic and Organometallic Reactions", Twigg, M. V., Ed., Plenum Press, New York, 1983.

56. This does not mean that covalent effects are necessarily negligible. Recent EHT results show how orbital overlap effects can explain significant stereochemical aspects of CO insertion into zirconium and thorium bonds to hydrogen. See reference 29.

Table 1. Geometries of Formaldehyde and Formyl-Metal Complexes at Various Levels[a]

		3-21+G	3-21G*	6-31G*
H_2CO		1.207[b]	1.182	1.184
BeH, η^2	CO	1.291[b]	1.254	1.249
	CBe	1.742	1.686	1.673
	OBe	1.592	1.572	1.582
	OCBe	61.2	63.4	63.6
	[BeH][c]		4.18	
	[O][d]		9.26	
BeH, η^1	CO	1.233[b]		1.207
	CBe	1.741		1.738
	OBe	2.526		2.471
	OCBe	115.2		112.9
BH_2 perp, η^1	CO	1.221[b]	1.198	1.197
	CB	1.576	1.587	1.591
	OB	2.446	2.342	2.425
	OCB	121.4	113.7	120.2
	[BH_2][c]		6.42	
	[O][d]		9.26	
BH_2 plan, η^1	CO	1.230		1.197
	CB	1.601		1.611
	OB	2.482		2.457
	OCB	121.9		121.4

Table 1. (Continued)

Na, η^2	CO	1.288	1.237	1.239
	CNa	2.256	2.180	2.243
	ONa	2.046	2.090	2.165
	OCNa	63.8	69.2	70.3
	[Na][c]		10.10	
	[O][d]		9.33	
MgH, η^2	CO	1.296	1.251	1.247
	CMg	2.140	2.078	2.074
	OMg	1.973	1.957	1.995
	OCMg	64.7	66.8	68.8
	[Mg][c]		12.12	
	[O][d]		9.33	
AlH_2 perp, η^2	CO	1.290	1.249	1.243
	CAl	2.039	1.973	1.956
	OAl	1.930	1.876	1.913
	OCAl	66.5	66.9	69.4
	[AlH_2][c]		14.14	
	[O][d]		9.33	
AlH2 perp, η^1	CO	1.240		
	CAl	2.044		
	OAl	2.820		
	OCAl	116.2		

Table 1. (Continued)

AlH2 plan, η^1	CO	1.236	1.201
	CAl	2.048	2.030
	OAl	2.885	2.825
	OCAl	121.0	119.7

[a]Distances in Angstroms, angles in degrees.

[b]3-21G optimization.

[c]Electron population on the metal fragment including hydrogens.

[d]Electron population on oxygen.

Table 2. Geometries of LiCHO Isomers at Various Levels[a]

			3-21G	3-21G*	6-31G*	6-31+G*	MP2/6-31G*
LiCHO, η^2	2	CO	1.280	1.246	1.243	1.244	1.277
		CLi	1.938	1.895	1.902	1.907	1.891
		OLi	1.746	1.762	1.782	1.774	1.835
		OCLi	61.8	64.1	65.1	64.5	67.6
		CH	1.098		1.104	1.104	1.114
		OCH	113.4		112.8	112.6	112.4
		[Li]		2.12[b]	2.12[c]		
		[O]		9.28[b]	8.87[c]		
OC-LiH	4	CO	1.121		1.107	1.107	
		CLi	2.267		2.339	2.327	
		LiH	1.641		1.643	1.639	
CO-LiH	5	CO	1.138		1.119	1.119	
		OLi	1.928		2.042	2.027	
		LiH	1.654		1.641	1.638	
(LiH)(CO)	6	CO	1.208		1.191	1.192	
		CLi	1.927		1.947	1.930	
		OCLi	166.5		163.7	167.1	
		CH	1.240		1.209	1.215	
		OCH	113.6		112.4	111.8	
		LiH	2.101		2.180	2.115	

[a]Distances in Ångstroms, angles in degrees.

[b]Integrated electron population on lithium and oxygen at 3-21G*.

[c]Natural Population on lithium and oxygen at 6-31G*.

Table 3. Stabilization by η^2 Coordination

	OCM[a]	Energy[b]	ΔE[c]
HBeCHO, η^2	63.6	-128.83692	8.3
HBeCHO, η^1	112.9	-128.82365	
H_2AlCHO perp, η^2	69.4	-356.69872	6.7
H_2AlCHO plan, η^1	119.7	-356.68808	
H_2AlCHO perp, η^2	66.5	-356.69876[d]	4.9
H_2AlCHO perp, η^1	116.2	-356.69096[d]	

[a]Angle in degrees.

[b]Total energy (a.u.) at MP2/6-31+G*//6-31G*.

[c]Energy difference between η^2 and η^1 structure in kcal/mol.

[d]Total energy (a.u.) at MP2/6-31+G*//3-21+G.

Table 4. Basis Set Truncation Effects on the Geometry of Formyllithium

Basis set	3-21G*	3-21G*(1s)[a]
CO (Å)	1.246	1.249
CLi (Å)	1.895	1.881
OLi (Å)	1.762	1.700
OCLi (deg)	64.1	62.0

[a]Carbon, oxygen, and hydrogen have standard 3-21G basis sets and lithium has a 3-21G basis set with the two valence shells removed.

Table 5. Relative and Zero Point Vibrational Energies (kcal/mol) of LiCHO Isomers

	LiCHO 2	OC-LiH 4	CO-LiH 5	T.S. 6	CO+LiH
3-21G//3-21G	0.0	+4.7	+0.5	+29.8	+17.5
6-31G*//6-31G*	0.0	-2.3	-2.4	+24.6	+5.7
MP2/6-31G*//6-31G*	0.0	+2.5	+5.0	+23.4	+12.9
6-31+G*//6-31G*	0.0	-1.6	-1.8	+22.4	+5.6
MP2/6-31+G*//6-31G*	0.0	+3.7	+6.3	+20.2	+12.3
6-311G*//6-31G*	0.0	-3.8	-4.1	+23.0	+2.8
MP2/6-311G*//6-31G*	0.0	+1.1	+4.2	+21.7	+9.7
6-31+G*//6-31+G*	0.0	-1.6	-1.8	+22.4	+5.6
MP2/6-31+G*//6-31+G*	0.0	+3.6	+6.3	+19.9	+12.3
MP3/6-31+G*//6-31+G*	0.0	+4.7	+5.8	+20.6	+13.0
MP4/6-31+G*//6-31+G*	0.0	+2.0	+3.6	+19.3	+10.5
6-311+G*//6-31+G*	0.0	-2.7	-2.9	+21.3	+3.5
MP2/6-311+G*//6-31+G*	0.0	+2.8	+6.2	+19.3	+10.8
ZPE[a]	10.5	6.2	6.0	8.0	4.9
Final est.[b] (0 K)	0.0	-3.1	-1.0	+16.2	+3.4

[a]Zero point vibrational energy at 6-31G*, scaled by 0.9.[37]

[b]Final estimate evaluated using MP2/6-311+G*//6-31+G* data plus ZPE corrections, adjusted for the MP2-MP4 differences at 6-31+G*.

Table 6. Reaction Energies (kcal/mol) of Equation (1)

MH + CO --> MCHO

M	3-21+G// 3-21+G	6-31G*// 6-31G*	MP2/ 6-31G*// 6-31G*	6-31+G*[a]	MP2/ 6-31+G*[a]
Li, η^2	-18.6	-5.7	-12.9	-5.6	-12.3
BeH, η^2	-5.3[b]	+3.6	-5.6	+4.7	-4.3
BeH, η^1	+5.9[b]	+13.0	+4.8	+12.8	+4.1
BH_2 perp, η^1	+6.1[b]	+10.2	+2.9	+9.7	+1.7
BH_2 plan, η^1	+2.4	+12.3	+5.1	+12.3	+4.5
Na, η^2	-18.4	+3.3	-3.1	+2.3	-4.2
MgH, η^2	-7.4	+5.5	-2.1	+6.4	-1.0
AlH_2 perp, η^2	-1.2	+7.3	-2.5	+8.5	-1.2
AlH_2 perp, η^1	+2.4	-	-	-	+3.7
AlH_2 plan, η^1	+2.4	+15.5	+6.6	+15.0	+5.5

[a]Geometries at various levels (6-31G* or 6-31+G*). [b]3-21G//3-21G.

Table 7. Reaction Energies (kcal/mol) of Equation (2)

$$CH_3M + HCHO \longrightarrow MCHO + CH_4$$

M	3-21+G// 3-21+G	6-31G*[a]	MP2/ 6-31G*[a]	6-31+G*[a]	MP2/ 6-31+G*[a]
Li, η^2	-28.9	-25.8	-24.9	-24.5	-21.8
BeH, η^2	-9.6[b]	-6.9	-8.4	-5.0	-5.5
BeH, η^1	+1.6[b]	+2.5	+2.0	+3.1	+2.8
BH_2 perp, η^1	+1.4[b]	+0.6	+0.8	+0.6	+0.6
BH_2 plan, η^1	+1.8	+2.7	+3.1	+3.1	+3.4
Na, η^2	-29.5	-21.5	-18.4	-20.1	-16.0
MgH, η^2	-12.2	-12.0	-11.0	-9.8	-7.7
AlH_2 perp, η^2	-1.3	-5.3	-6.8	-3.4	-4.1
AlH_2 perp, η^1	+2.2	-	-	-	+0.7
AlH_2 plan, η^1	+2.3	+2.9	+2.3	+3.1	+2.5

[a]Geometries at various levels (6-31G* or 6-31+G*). [b]3-21G//3-21G.

Figure 1. Projected electron density map of formyllithium at 3-21G*. Molecular fragments are demarked by the dotted lines and fragment populations are given. Contour levels are from 0.05 to 0.53 with a gradient of 0.08 e/a.u.^{2}

Figure 2. Projected electron density maps of the pi M.O.'s of formaldehyde (a) and formylberyllium hydride (b) at 3-21G*. The contour levels are from 0.03 to 0.30 with a gradient of 0.03 e/a.u.^{2} In each case the oxygen is on the left.

1

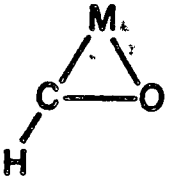

2

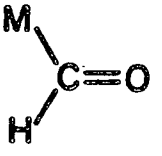

3

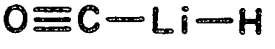

4

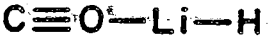

5

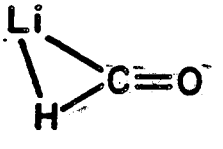

6

Fig. 1

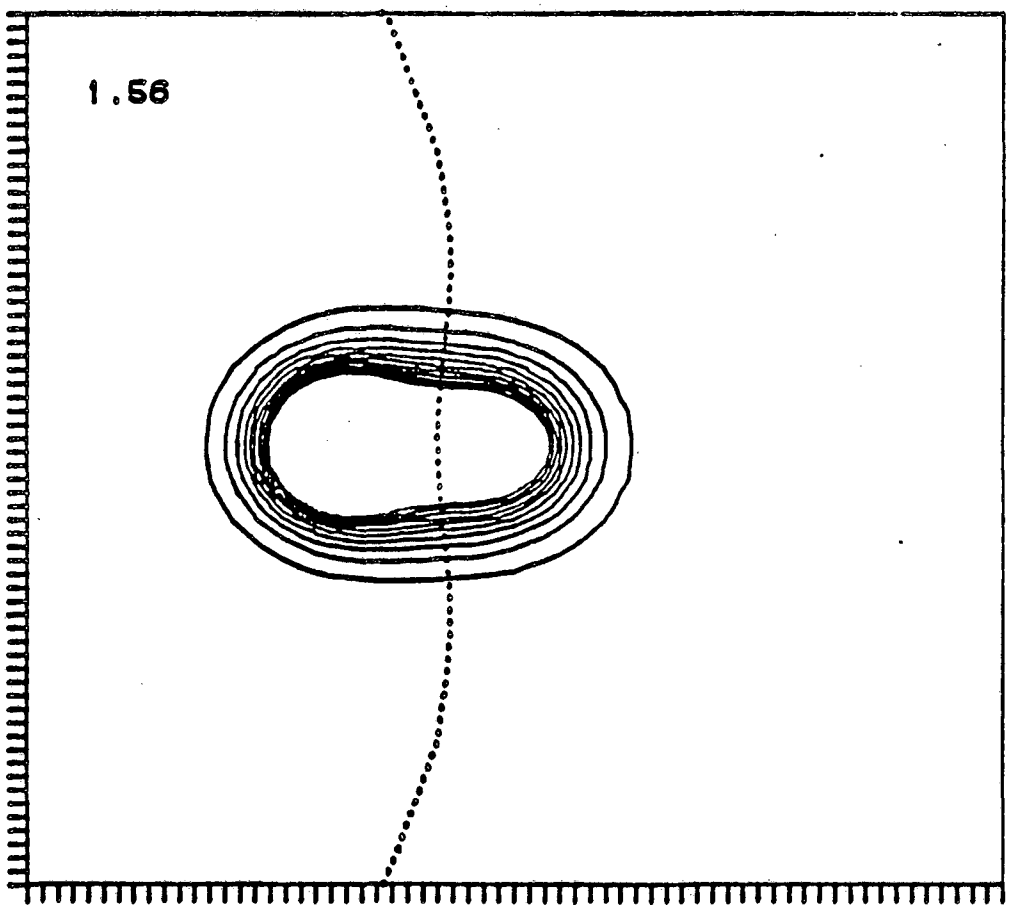

Fig. 2a

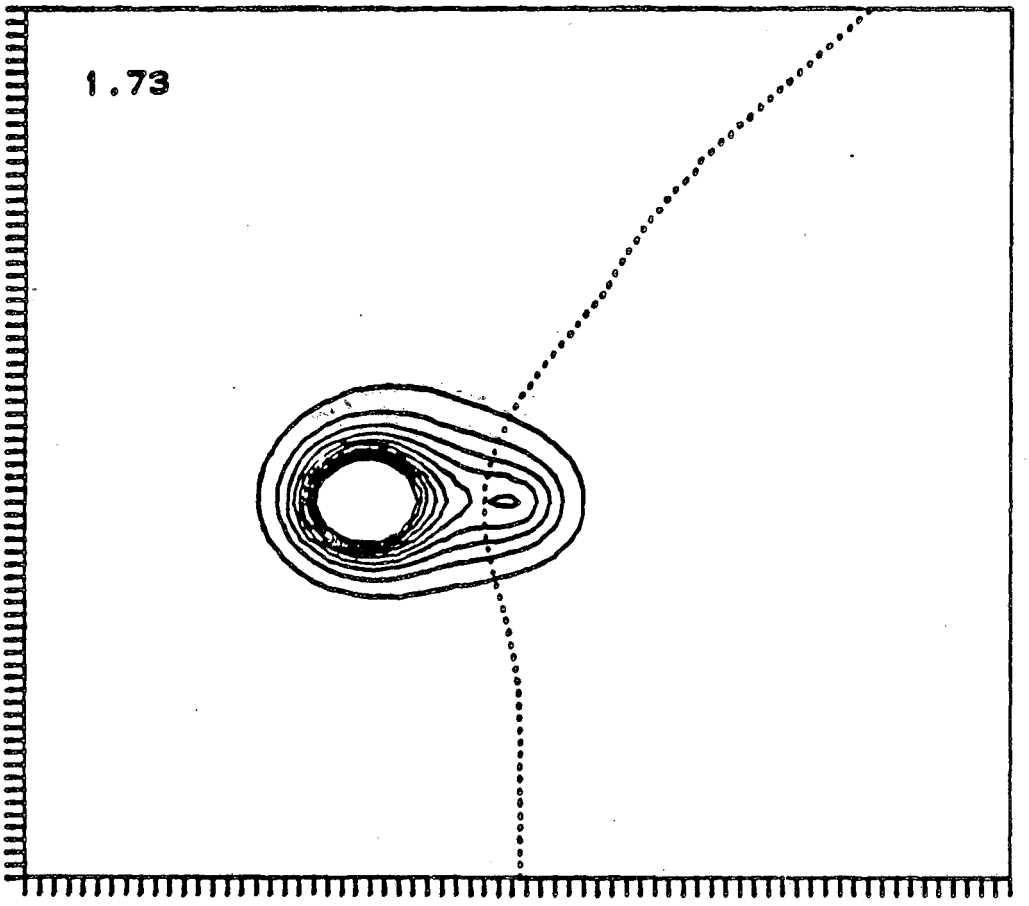

Fig. 2b

This report was done with support from the Department of Energy. Any conclusions or opinions expressed in this report represent solely those of the author(s) and not necessarily those of The Regents of the University of California, the Lawrence Berkeley Laboratory or the Department of Energy.

Reference to a company or product name does not imply approval or recommendation of the product by the University of California or the U.S. Department of Energy to the exclusion of others that may be suitable.

LAWRENCE BERKELEY LABORATORY
TECHNICAL INFORMATION DEPARTMENT
UNIVERSITY OF CALIFORNIA
BERKELEY, CALIFORNIA 94720