LBL-22896
Preprint c.2

Lawrence Berkeley Laboratory
UNIVERSITY OF CALIFORNIA

APPLIED SCIENCE DIVISION

RECEIVED
LAWRENCE
BERKELEY LABORATORY

MAY 23 1988

LIBRARY AND
DOCUMENTS SECTION

Submitted to Environmental Science and Technology

A Comparison of "Hood" and "Chamber" Techniques for Quantifying Pollutant Emission Rates from Unvented Combustion Appliances and an Evaluation of Selected Organic Pollutant Emissions from Unvented Kerosene Heaters

G.W. Traynor, M.G. Apte, H.A. Sokol, J.C. Chuang, and J.L. Mumford

November 1987

APPLIED SCIENCE
DIVISION

LBL-22896 c.2

Prepared for the U.S. Department of Energy under Contract DE-AC03-76SF00098

DISCLAIMER

This document was prepared as an account of work sponsored by the United States Government. While this document is believed to contain correct information, neither the United States Government nor any agency thereof, nor the Regents of the University of California, nor any of their employees, makes any warranty, express or implied, or assumes any legal responsibility for the accuracy, completeness, or usefulness of any information, apparatus, product, or process disclosed, or represents that its use would not infringe privately owned rights. Reference herein to any specific commercial product, process, or service by its trade name, trademark, manufacturer, or otherwise, does not necessarily constitute or imply its endorsement, recommendation, or favoring by the United States Government or any agency thereof, or the Regents of the University of California. The views and opinions of authors expressed herein do not necessarily state or reflect those of the United States Government or any agency thereof or the Regents of the University of California.

LBL-22896

A COMPARISON OF "HOOD" AND "CHAMBER" TECHNIQUES FOR QUANTIFYING POLLUTANT EMISSION RATES FROM UNVENTED COMBUSTION APPLIANCES AND AN EVALUATION OF SELECTED ORGANIC POLLUTANT EMISSIONS FROM UNVENTED KEROSENE HEATERS.

by

Gregory W. Traynor, Michael G. Apte, and Harvey A. Sokol
Indoor Environment Program
Lawrence Berkeley Laboratory
University of California
Berkeley, CA 94720

Jane C. Chuang
Analytical and Structural Chemistry Center
Battelle Columbus Laboratories
Columbus, OH 43201

Judy L. Mumford
Health Effects Research Laboratory
U.S. Environmental Protection Agency
Research Triangle Park, NC 27711

November 1987

This project has been funded by the U.S. Environmental Protection Agency under Interagency Agreement DW89930753 through the U.S. Department of Energy under Contract No. DE-AC03-76SF00098.

ABSTRACT

A study was performed to compare the "hood" and "chamber" techniques for quantifying pollutant emission rates from unvented combustion appliances and to assess the semivolatile and nonvolatile organic-compound emissions from unvented kerosene space heaters. In general, the hood and chamber techniques yielded similar emission-rate results for CO, NO, and NO_2. However, when differences were observed, it was concluded that the chamber-technique value was more realistic because this technique allows the oxygen level supplied to the appliance to decrease as it would in residences. A well-tuned radiant heater and a maltuned convective heater were tested for semivolatile and nonvolatile organic pollutant emissions. Each heater was operated in a 27-m^3 chamber with a prescribed on/off pattern. Organic compounds were collected on teflon-impregnated glass filters backed by XAD-2 resin and analyzed by gas chromatography/mass spectrometry. Pollutant source strengths were calculated using a mass-balance equation. The results show that kerosene heaters can emit polycyclic aromatic hydrocarbons (PAHs); nitrated PAHs; alkyl benzenes; pentachlorphenol; phthalates; hydro naphthalenes; aliphatic hydrocarbons, alcohols, and ketones; and other organic compounds, some of which are known mutagens.

INTRODUCTION

The sale and use of unvented kerosene space heaters have increased dramatically in the United States during the past decade. These heaters have been found to emit a wide variety of pollutants including carbon monoxide (CO), carbon dioxide (CO_2), nitric oxide (NO), nitrogen dioxide (NO_2), sulfur dioxide (SO_2), formaldehyde (HCHO), and suspended particles (Yamanaka et al., 1979; Leaderer, 1983; Ryan et al., 1983; Traynor et al., 1983; Lionel et al., 1986). Several studies using a kerosene-fueled turbulent-diffusion continuous-flow combustor showed that many polycyclic aromatic hydrocarbons (PAHs) are emitted during kerosene combustion (Prado et al., 1973; Skopek et al., 1979; Kaden et al., 1979). Skopek et al. and Kaden et al. also showed that kerosene soot is indirectly mutagenic. Kaden et al. showed that essentially all of the indirect mutagenic activity of kerosene soot was due to unnitrated PAH compounds. Tokiwa et al. (1985) revealed that kerosene heaters emit dinitropyrene. These researchers also showed kerosene soot to be directly mutagenic and showed that most of the direct mutagenic activity could be attributed to dinitropyrenes.

The above studies have shown the following: 1) kerosene combustion products can be mutagenic, 2) kerosene combustion can produce PAHs and nitrated PAHs, and 3) it is likely that much of the mutagenic activity of kerosene soot is due to the PAHs and nitrated PAHs. However, it is not known whether the unvented portable kerosene space heaters commonly used indoors in the U.S. produce emissions similar to those emitted by the kerosene combustors used (Prado et al., 1973; Skopek et al., 1979; Kaden et al., 1979) or whether these portable space heaters produce other potentially harmful organic pollutants. Of the two major goals of this study, the most important was to measure selected organic pollutant emissions (including PAH and nitro-PAH emissions) from portable kerosene heaters commonly used in the U.S.

The secondary, goal of this study was to compare and contrast two different techniques for assessing pollutant emissions from unvented combustion appliances. One technique, described by Traynor et al., 1982, which we will call the "chamber" technique, involves placing the unvented combustion appliance in a large (i.e., room-size or larger) chamber, operating the appliance for a representative period of time, and monitoring the increase in the chamber pollutant concentrations. The pollutant emission rate, expressed as mass of pollutant emitted per unit of fuel consumed--often $\mu g/kJ$, is then calculated from the chamber and outside pollutant concentrations using a single-equation, mass-balance model. The chamber technique has been used to quantify pollutant emission rates from kerosene heaters in at least two studies (Leaderer, 1983 and Traynor et al., 1983). The other technique, described by Himmel and DeWerth (1974), Yamanaka et al. (1979), and ANSI (1982), which we will call the "hood" technique, involves placing the unvented combustion appliance under a hood large enough to capture all of the pollutant emissions and measuring the ratio of the concentration of each pollutant under investigation to the concentration of CO_2 in the hood exhaust flue. After correcting for background dilution air, the theoretical CO_2 emission rate is used to calculate the emission rate of the pollutant of concern. Both Yamanaka et al. (1979) and Lionel et al. (1986) used the hood technique to measure pollutant emission rates from kerosene heaters.

For the evaluation of the hood and chamber measurement techniques, we used one unvented radiant kerosene heater and one infrared unvented (natural) gas space heater (UVGSH). Radiant and infrared combustion space heaters generally have more repeatable emission-rate characteristics than do their convective counterparts (Apte and Traynor, 1986); therefore, using such heaters allowed us to easily detect any hood-vs.-chamber emission-rate differences.

For the tests investigating organic pollutant emissions from kerosene heaters, our choices of two heater/tuning conditions were based, in part, on previously reported particulate emission data (Traynor et al., 1983). The previous study showed that particulate emissions from a well-tuned, properly operated convective kerosene heater were negligible but that particulate emissions from a radiant heater were not. Therefore, we reasoned that significant organic emissions would be more likely to be observed from a radiant heater than from a convective heater. A radiant heater operating under well-tuned normal conditions was chosen as the first heater/tuning combination to be tested. The other heater/tuning combination chosen for testing was a convective heater operated under maltuned conditions. This choice was based, in part, on conversations with kerosene-heater users and testers, who indicated that a convective heater was more likely to "soot" (i.e., emit a visible stream of particles) than was a radiant heater. In fact, altering the burner assembly itself was the only way the radiant heater tested in this study could be made to soot. We maltuned the convective heater by lifting the exterior shell of the heater by approximately one cm, thereby providing excess air to the wick. Only two heater/tuning combinations were tested because each test had to be conducted many times to collect enough samples for future testing for mutagenic effects.

All experiments were conducted at the Lawrence Berkeley Laboratory (LBL). Battelle's Columbus Division (BCD) prepared and analyzed filters and resins used by LBL to collect selected organic pollutants and provided sample extracts to the Health Effects Research Laboratory of the U.S. Environmental Protection Agency (EPA) for future mutagenicity testing (Chuang et al., 1986). The mutagenicity test results from these sample extracts will be presented in another report (private communication, J. Mumford, 1986).

EXPERIMENTAL METHODS

AIR POLLUTION MONITORING INSTRUMENTATION

Most of the air pollution monitoring instrumentation was located in the Lawrence Berkeley Laboratory's Mobile Atmospheric Research Laboratory (MARL), which is designed to monitor indoor or outdoor atmospheres and the dynamic changes in those atmospheres associated with the operation of domestic combustion appliances. The MARL is a mobile unit equipped with gas analyzers (for CO_2, O_2, CO, NO, NO_2 and NO_x) and temperature and humidity monitors sensitive in ranges normally associated with indoor environments. Figure 1 gives a schematic layout of the MARL. Table 1 lists the instrumentation and gives accuracy and precision estimates. Table 2 lists the special equipment used for instrument calibration.

The MARL continuously draws air samples through Teflon tubing from two locations and uses a timing system to automatically switch from one site to the next at preset intervals (see Fig. 1). Teflon prefilters are fitted at the inlets of the sampling lines to protect the instruments from particulate matter. Although the MARL can monitor gases only from a single location at a given time, sample air is drawn through both lines continuously to minimize purge time when the unit switches between lines. Lines that are not being monitored are vented to the outside by an exhaust pump. A Teflon-lined pump supplies the sample from the site being monitored to the glass mixing manifold and maintains the manifold pressure just above atmospheric. The gas analyzers draw the sample from the manifold by means of individual pumps. (Only nonreactive materials are used upstream of the gas analyzers to ensure minimum degradation of the sample.) During typical testing the total sample flow is approximately 0.5 m^3/h.

The MARL calibration system was designed for rigorous calibration of the gas analyzers. Certified primary standard gas mixtures are diluted with "ultrapure" air using a mass-flow controlled mixing system to produce a large range of concentrations suitable for calibration. To check for problems such as a bad pump diaphragm or leaky sampling lines, we inject a primary standard gas of known concentration into the upstream inlet of a sampling line after each daily calibration session.

Two data-acquisition systems connected to a central patchboard are used to monitor pollutant concentrations (see Fig. 1). One, a microprocessor-based system, logs primary data on magnetic tape at one-minute intervals. The second system provides a back-up record by printing data onto paper tape. A chart recorder connected to the patchboard is used for real-time graphic display of an experiment in progress. At the end of an experiment, data from the magnetic tape are read into a mainframe computer for subsequent analysis.

Natural-gas consumption is metered by a Singer AL-425 diaphragm gas meter located outside of the chamber. Kerosene consumption is determined by pre- and post-test mass measurements of the heater made with a Ohaus double-beam mechanical balance.

SPECIAL INSTRUMENTATION FOR COMPARISON OF HOOD AND CHAMBER TECHNIQUES

HCHO and total suspended particulate (TSP) concentrations were measured for the tests designed to compare the hood and chamber pollutant emission-rate measurement techniques.

The HCHO collection system is adjacent to the chamber and draws air at a constant rate through two dedicated sample lines for subsequent wet-chemical analysis (Miksch et al., 1981). Each sample is collected by a pair of water-filled impingers in series. Duplicate samples are provided by dividing each sample line in two just upstream of the impinger trains. The HCHO collection system is purged with nitrogen for 15-20 minutes before each test to avoid HCHO accumulation in the sampling lines.

For the chamber tests, there were three identical TSP collection systems, one located outside and two inside the chamber to give integrated particle concentration measurements. For the hood tests, one TSP collection system was located in the chamber, and two systems were connected to stainless-steel probes that sampled air through the hood flue wall (see Fig. 2). Particles were collected by drawing air through 1-μm, 47-mm Teflon, Fluoropore filters. The sample volumes were monitored with Rockwell R200 diaphragm meters, corrected for temperature and pressure. The loading of the filters is gravimetrically measured by pre- and postsample mass measurements of the filters. Filters are dessicated before each mass measurement. A Cahn 21 Electrobalance is used for weighing the filters.

The Electrical Aerosol Sizer Analyzer (EASA), which uses the mobility of charged particles to make continual measurements of submicron particles, is located inside of the chamber and out of the direct path of hot exhaust gases (Whitby, 1976). The control electronics and data-recording system for the EASA are located outside and adjacent to the chamber. The real-time particulate concentration profiles collected with the EASA were used to transform the average TSP data into a real-time TSP concentration profile.

SPECIAL INSTRUMENTATION FOR EVALUATING SELECTED ORGANIC POLLUTANT EMISSIONS

Using sampling and analytical techniques developed by the EPA (Mumford et al., 1987), we measured semivolatile organic compounds (SVOCs) and TSP, including nonvolatile and particle-bound organic pollutants, to assess selected organic pollutant emission rates from unvented kerosene heaters. TSP concentrations were collected on Teflon-impregnated, glass-fiber filters that were 102 mm in diameter. The semivolatile organic compounds were collected on 100 g of precleaned XAD-2 resin.

BCD prepared and analyzed the Teflon-impregnated glass-fiber filter and the XAD-2 resin. From the report by Chuang et al., (1986) describing the analytic support for this project, the following describes Battelle's sample preparation procedures.

> The XAD-2 resin was purchased from Supelco Inc. as precleaned resin and was further cleaned by Soxhlet extraction with distilled-in-glass (DIG) methylene chloride for 16 hours. The clean XAD-2 resin was dried using a nitrogen gas stream to evaporate the solvent. A purification and background check was performed on the clean resin by extracting and analyzing an aliquot of the resin using gas chromatography with flame ionization detection (GC/FID).
>
> The clean XAD-2 resin was sent to LBL for use in sampling. To ensure resin integrity during transportation and handling, clean steel cans were used as shipping containers. The cans were 16.5 cm in diameter and 17.8 cm high. The resin was first sealed in an amber bottle that had been cleaned with laboratory detergent, rinsed with tap water, distilled water, distilled-in-glass (DIG) methanol and DIG methylene chloride, then put in the oven at 500°C overnight. The amber bottle had a Teflon-lined cap. Each bottle contained 130 g of prepared resin. Three bottles were placed in a steel can and were packed with clean cotton cloth. A total of five steel cans containing 15 bottles of clean resin were prepared and sent to LBL.
>
> The pre-cut Teflon-impregnated, glass-fiber filters were received from LBL. The filters were dessicated overnight, then weighed to a constant weight by a Mettler HL 52 balance. After weighing, the filter was placed between two watch glasses and sealed with Teflon tape. The weight and filter number were recorded on a label on the watch glasses. These filters and the XAD-2 resin were shipped to LBL by overnight express mail.

Three XAD-2/filter sampling modules were used at LBL for organic pollutant and TSP collection. Two modules were placed inside the chamber, and one module was placed outside the chamber, but inside Building 44, which houses the chamber (see Fig. 1).

The XAD-2/filter sampling modules, primarily constructed of stainless steel, were designed to collect particles and SVOC's when used with a medium-flow sampling system. The sampling module consisted of an open-face, 102-mm, filter clamping ring threaded onto a modified 15-cm-deep threaded stainless-steel pipe. Stainless-steel screens and retainers are used to hold the filter in place and create a volume for approximately 100 g of XAD-2 resin. A threaded cap fits on the back end of the pipe. O-rings were used behind the filter clamping ring to prevent leaks.

Before each use, the XAD-2/filter sampling modules were cleaned. First, the modules were checked to ensure that all XAD resin particles were removed. Second, the modules were completely disassembled. Third, the O-rings and all parts of the modules were held with stainless-steel forceps and thoroughly cleaned by a stream of methylene chloride from a Teflon wash bottle. All rinsed parts were placed on a clean, dust-free surface (such as lint-free laboratory wipes or glass). Finally, all parts (except O-rings) were rinsed again with methylene chloride and dried in an oven at 100 °C for at least 30 minutes.

After drying, the parts were removed from the oven; linen gloves were used, and only the exterior of the parts were handled. The modules were partially reassembled, and the inlet and outlet parts were covered with aluminum foil. The modules were kept in a clean, safe place until ready for use.

Just prior to use, the XAD-2/filter modules were assembled and attached to a medium-volume flow sampler (6.8 m^3/h) by way of fittings on the filter holders. The steps described below were followed:

1. A clean location, lined with aluminum foil was prepared.

2. A bottle of approximately 130 g of XAD-2 resin was opened (linen gloves were used), and approximately 100 g of resin was poured into the open XAD-2/filter module. A retaining screen was placed over the XAD-2.

3. The remaining XAD-2 resin (approx. 30 g) was resealed in its original bottle, labeled, and saved for analysis as a blank.

4. The filter-support screen assembly (with O-ring) was placed over the XAD-2's retaining screen. The Teflon-impregnated glass-fiber filter was placed on the support screen, and the open-face cap was threaded onto the rest of the module.

Once the filter and XAD-2 were placed in the module, sampling could begin. After sampling was completed, a new clean workspace was made, and the following steps were taken:

1. Clean stainless-steel tweezers were used to remove the filter from the module. The filter was folded in half and then in half again so that all particulate-laden surfaces faced inward. The folded filter was wrapped in aluminum foil and placed in a glass vial sealed with Teflon tape and Teflon lid liners.

2. The XAD-2 resin was poured through a clean glass funnel into a clean amber glass bottle with a Teflon-lined cap. Clumps of XAD-2 were broken up with a clean stainless-steel spatula and glass rod.

3. The bottle was sealed and labeled.

4. The filters and XAD-2 resin were packaged in clean metal paint cans and shipped on dry ice with a completed data sheet by an overnight express service to BCD for extraction and analysis.

Only one of twenty-six XAD-2 resin bottles arrived at Battelle broken and was eliminated from subsequent data analysis.

The following analytical procedures were used by BCD and are quoted from Chuang et al., (1986).

SAMPLE EXTRACTION

After sampling, the filter and XAD-2 samples were returned to BCD from LBL. The container for sampled XAD #7 was broken when this sample was received. However, approximately 90 percent of the XAD-2 resin was recovered from the steel can. The remaining samples were received in good condition.

The filter samples were placed in a dessicator overnight and the filter weights were obtained by using the same procedures described in the previous section.

Soluble organic material was removed from the filter and XAD-2 samples by Soxhlet extraction with DIG methylene chloride. Extractions were carried out for a minimum of 16 hours and until the solutions in the Soxhlet extractor's top chamber became colorless. After extraction, an aliquot of each selected sample extract was removed for total chromatographable organic matter (TCO) analysis. The remaining extract was concentrated by Kuderna-Danish evaporation to approximately 10 ml. The concentrated extract was then transferred to a sample container for chemical or biological analyses.

GRAVIMETRIC (GRAV) ANALYSIS

The GRAV analyses were performed to quantify extracted organic material with boiling points predominantly over 300°C. An aliquot of known volume of the concentrated extract was placed on a tarred aluminum pan and the solvent allowed to evaporate to dryness at room temperature. The residue was weighed until weight change was less than 1-2 μg. A Mettler ME30 microbalance was used for these analyses. The residue weight of the aliquot analyzed was then scaled to the total quantity in the original sample extract.

TOTAL CHROMATOGRAPHABLE ORGANIC MATERIAL (TCO) ANALYSIS

The TCO determination was performed to quantify organic materials having boiling points in the range of 100 to 400°C. Because materials in the TCO volatility range may be lost to varying degrees during solvent evaporation, this analysis was performed prior to any concentration step.

For determination of TCO, 2 μl of the extract was analyzed by gas chromatography (GC) using a flame ionization detector. A 30-meter with 0.25-mm I.D., DB-5 fused silica capillary column was used. The GC was operated using the following program: injected at 40°C hold for 4 min., then program from 40°C to 300°C at 8°C/min. and hold at 300°C for 8 min. The injector temperature was 275°C and the detector temperature was 300°C. A Hewlett-Packard Model 5730 GC, including a Hewlett-Packard autosampler, was used for these analyses. Data collection and processing were accomplished using a Computer Automated Laboratory System (CALS) software program on a Hewlett-Packard Model 1000 computer.

The quantitative calibration of the TCO procedure was accomplished by using mixtures of known concentrations of the normal hydrocarbons C_8, C_{12}, C_{16}, and C_{20}. The quantitative calibration standards were prepared to cover the concentration ranges of 2.5, 5, and 10 ppm levels. Retention time limits corresponding to the TCO range of boiling points were defined by the peak maxima for n-heptane (C_7, b.p. 98°C) and hexacosane (C_{26}, b.p. 412°C). Therefore, integration of detector response started at the retention time of C_7 and terminated at the retention time of C_{26}. The integrated area covered organic material in the boiling point range of 100 to 400°C. Data analyses involved comparison of the total integrated peak area between the peak maxima for C_7 and C_{26} for the standard and unknown chromatograms. Data processing was accomplished using a CALS software program and the data were reported as total weight (mg) per sample.

GAS CHROMATOGRAPHY/MASS SPECTROMETRY (GC/MS) ANALYSIS

The combined extracts of filter and XAD-2 samples as well as filter and XAD-2 field blanks were analyzed by on-column injection, negative chemical ionization (NCI), GC/MS to identify and quantify selected nitrated PAH. These samples were also analyzed by conventional splitless injection, with electron impact mode (EI), GC/MS method in full scan mode to semi-quantitatively determine the major components. A Finnigan Model 4500 GC/MS with methane as the carrier gas was used for these analyses. An Ultra #2 crosslinked, 5 percent phenyl methyl silicon column was used as both the GC column and the transfer line between the GC oven and the MS ionization source. Data acquisition and processing were performed with a Finnigan INCOS Model 2300 data system. The GC and MS conditions are summarized in Table (3).

Prior to analysis, the system was calibrated by introducing a standard, perfluorotributylamine (FC-43), and determining the mass assignment for principal fragment ions. The mass calibration table was stored and served to calibrate the ion masses over the scanning range.

NEGATIVE CHEMICAL IONIZATION, GAS CHROMATOGRAPHY/ MASS SPECTROMETRY (NCI GC/MS)

Each combined sample extract was spiked with the internal standard, d_9-nitropyrene, immediately prior to analysis. This NO_2-PAH does not occur naturally, and thus, will not pose a problem as an interferent. The use of an internal standard from the same compound class as the compounds to be quantified which has an average molecular weight and elution time of those compounds enhances the analytical precision of the quantification. This is due to the fact that an average correction factor for injection technique, chromatographically active site effects and variation in the daily mass spectrometer tuning are applied to the quantification of all compounds.

One set of standards covering the calibration range was analyzed initially to ensure linearity. A four-point standard curve was generated for each of the target compounds. These standards were analyzed in triplicate along with a blank sample to determine the baseline. The concentration range of the standards was 0.1 μg/mL, 0.3 μg/mL, 1 μg/mL and 3 μg/mL, each containing the internal standard, d_9-nitropyrene, at a concentration of 1 μg/mL. A volume of 1 μL of each solution was injected and the response compared to that of the internal standard was calculated. The calibration curve for each target compound was generated using the following equation:

$$y = mx + b$$

where $y = A_s/A_{is}$, $x = C_s/C_{is}$

m = slope, b = intercept

A_s = Area of the target compound

A_{is} = Area of the internal standard

C_s = Concentration of the target compound

C_{is} = Concentration of the internal standard.

The computer performed a least squares analysis and calculated a correlation coefficient and intercept. The correlation coefficient must be at least 0.990 for an acceptable calibration curve. After the calibration curve was established, the order of analysis was: standard, sample, sample, sample, standard, sample, sample, sample, standard until all analyses of a set were completed. In this way, the calibration curve generated from all of the standard analyses accurately reflects the condition and operation of the mass spectrometer throughout the analyses.

The validity of the calibration curve was monitored by analyzing successive calibration solutions using the curves, and comparing the value obtained with the known value. Quantifications within 30 percent

of the true value are considered acceptable and do not require reanalysis of the sample.

This project was not designed to determine the detection limit of the NCI GC/MS method. However, based on the lowest standard analyses, the estimated detection limit for the NO_2-PAH ranged from 0.01 ng to 0.001 ng on column.

ELECTRON IMPACT, GAS CHROMATOGRAPHY/MASS SPECTROMETRY (EI GC/MS)

The combined sample extracts were also analyzed by EI, GC/MS in the full scan mode. Four of the selected sample extracts ... were analyzed first. The identifications of sample components were conducted by comparison to reference spectra in the EPA/NIH mass spectral library which contains over 30,000 reference mass spectra. Battelle reported the results to the EPA Project Officer. The surrogate standards were then chosen to represent the full range of organic classes that are present in the four primary samples. The list of the surrogate standards is given in calibration curve for each of these target compounds was generated (2 standard concentration levels, triplicate analyses for each concentration level as described in ... [Table 4]). The internal standard, 9-phenyl anthracene, was added to the standard solution and the sample extracts. The remaining sample extracts were also analyzed by the semi-quantitative EI GC/MS technique. Identification of the components from this semi-qualitative approach was performed by comparison to reference spectra in the EPA/NIH mass spectral library using an INCOS software program. In addition, the manual search for PAH compounds and the manual confirmation of the computer-search data, were also carried out. In this semi-quantitative approach, the average response factor of each target compound was generated from the standard analyses. The response factor of each target standard was used for the same class of organic compounds identified in the sample extracts (e.g., naphthalene as the standard for all 2-ring PAH and phenanthrene for 3-ring PAH). If some compounds found in the sample extracts are not represented by the selected target standards, the response factors for these compounds were designated as 1. This analysis is called semi-quantitative because results are estimated to be accurate only to within a factor of 3 to 4."

ENVIRONMENTAL CHAMBER

All tests were conducted in a 27-m^3 environmental chamber housed in Building 44 at LBL (see Fig. 1). The chamber walls and ceiling are taped-and-sealed sheet rock, and the floor is concrete. The air exchange rates of the chamber were in the range of 0.4 to 0.6 air changes per hour for chamber tests conducted as part of the chamber- or hood-method comparisons. The chamber air exchange rates for organic pollutant emissions tests averaged 1.1 ± 0.1 air changes per hour because of high sampling flow rates needed for the XAD-2/filter collecting systems. Hood tests were conducted in the chamber with the chamber door open; however, all pollutants were exhausted outside of Building 44, and the chamber air exchange rate is not a relevant parameter for such tests.

TEST PROTOCOLS

A total of 16 tests were conducted for the chamber vs. hood method comparison. Eight tests were conducted using each method. Of the eight tests, four were conducted with a radiant kerosene heater, and four were conducted with a natural-gas infrared heater. The fuel consumption rates of the radiant kerosene heater averaged 7430 ± 100 kJ/h for the chamber tests and 8080 ± 190 kJ/h for the hood tests, whereas the fuel consumption rates of the natural-gas infrared heater were the same for both test types and averaged 20,600 ± 170 kJ/h. The 9% higher fuel consumption rate for the radiant kerosene heater during the hood tests may be a result of the higher oxygen concentrations of the combustion supply air for the hood tests.

A total of nine tests were conducted using the chamber method to assess the organic pollutant emission rates from kerosene heaters. Five tests were conducted with a well-tuned radiant heater, two tests were conducted with a maltuned convective heater, and two control tests were conducted without a heater. The fuel consumption rates of the radiant heater averaged 7000 ± 100 kJ/h, and the rates for the maltuned convective heater averaged 6900 ± 600 kJ/h. A single-equation mass-balance model was used to calculate pollutant emission rates from unvented combustion space heaters based on laboratory data obtained by using the chamber technique (Traynor, et al., 1982). This model has been used successfully to predict indoor air pollution levels as well as to determine indoor air quality parameters that can affect such levels. The model is repeated here.

The mathematical expression for a change in the average indoor gaseous pollutant concentration of a whole house is as follows:

$$dC = PaC_o\, dt + \frac{S}{V} dt - (a + k)\, C\, dt, \qquad (1)$$

where C = indoor pollutant concentration (ppm),

C_o = outdoor pollutant concentration (ppm),

P = fraction of the outdoor pollutant level that penetrates the building shell (unitless),

a = air exchange rate (h^{-1}),

S = indoor pollutant source strength (cm^3/h),

V = volume (m^3), and

k = net rate of removal processes other than air exchange (h^{-1}).

For particles, C and C_o are usually expressed in units of $\mu g/m^3$, and S is expressed in units of $\mu g/h$. Assuming C_o, P, a, S, and k are constant over the period of interest, Eq. 1 can be solved for C(t), the chamber pollutant concentration at time t, to give

$$C(t) = \frac{PaC_o + S/V}{a + k} \left(1 - e^{-(a+k)t}\right) + C(0)\, e^{-(a+k)t} \qquad (2)$$

Equation 2 describes the spatial average concentration of a pollutant in an enclosed space of a given volume.

Solving Eq. 2 for S, dividing it by the fuel consumption rate, R (kJ/h), and letting T equal the duration of appliance operation, we can obtain the emission rate, E (μg/kJ for particles and cm^3/kJ for gases):

$$E = \frac{S}{R} = \frac{V}{R}(a + k) \quad \frac{C(T) - C(0)\, e^{-(a+k)T}}{1 - e^{-(a+k)T}} - \frac{VPaC_o}{R} \qquad (3)$$

For gases, E, in cm^3/kJ, has been converted to μg/kJ by using the ideal gas law and the time-weighted average temperature and pressure in the space of concern. Note that Eq. 3 relies on the final average indoor pollutant concentration, C(T). In laboratory tests, the use of mixing fans increases the accuracy and precision of the C(T) measurement.

The chamber-technique testing protocol was used to assess both short-term and long-term pollutant emission rates from UVGSHs. Each heater was placed on a movable cart before testing, and a long flexible hose was used to supply the heaters with either natural gas or propane. The heater was initially operated inside the chamber until 5500 kJ of fuel was consumed (140 L of natural gas or 60 L of propane). Then, while the heater was still operating, it was rolled out of the chamber and out of the building (Building 44) surrounding the chamber to the outside. Heater operation continued in a partial enclosure for at least 90 minutes. The heater was then returned to the chamber, and another 5500 kJ of fuel was consumed before the heater was shut off.

Figure 3 shows the pollutant profile of a test as seen by the MARL pollutant instruments. The pollutant concentration in Building 44 was monitored three times during each test. Twice during each test, pollutants escaped from the chamber at a rate higher than the infiltration rate; once when the door was opened to remove the heater from the chamber and again when the door was opened to return the heater to the chamber. This loss of chamber pollutants slightly alters the emission-rate calculations in this study as compared to those in our previous studies. Previously we computed C(T) in Eq. 3 by "backtrack" from the decay curve after the heater was shut off. This ensured that the C(T) value was determined from "well-mixed" concentration data. This method cannot be used in the present case because we must open the door and C(T) would be biased low during the short-term emission-rate portion of the test. Also, during the long-term portion of these tests, C(0) in Eq. 3 is uncertain because the door was open while we returned the heater to the chamber.

Under the protocol used in this study, C(T) for the first burn is taken directly from the data, and C(T) for the second burn is determined by backtrack. Approximately 4% of the chamber pollutants was lost after the peak of the first burn when the door was open, and the measured peak is usually higher than the backtrack peak. However, in both burns the emission-rate values were adjusted to compensate for these effects (see discussion below); C(0) for both burns is taken directly from the actual data.

Because of the increased uncertainty in either C(T) and C(0) for each burn, the uncertainty in our CO_2 emission rates was considerably greater than the 3% measured in our earlier laboratory study (Traynor et al., 1985). Assuming that this increased uncertainty affected other pollutants as well as CO_2, we applied a normalizing factor, based on the theoretical CO_2 emission rates, to our emission-rate calculations. Having previously demonstrated that the measured CO_2 emission rate was not discernible from the theoretical CO_2

emission rate (Traynor et al., 1985), we corrected all of the data by multiplying each emission rate by the ratio of the theoretical CO_2 emission rate to the measured CO_2 emission rate. These corrections were on the order of 5 to 10%. The theoretical CO_2 emission-rate value used for natural gas was 51,000 μg/kJ (approximately 28 cc/kJ), and the value used for kerosene was 71,300 μg/kJ (approximately 39 cc/kJ).

The special chamber tests used to collect semivolatile organic pollutants and total suspended particles varied slightly from the above protocol so we could get larger pollutant samples to analyze. The five tests with the well-tuned radiant heater were eight hours long. The heater was operated for one hour and then turned off for one hour. This cycle was repeated four times. The heater was never removed from the chamber. A technician had to enter the chamber to start and stop the heaters. The two maltuned-convective-heater tests were four hours long, each consisting of two cycles of one hour on and one hour off. The two control tests were each eight hours long.

HOOD TEST PROTOCOL

The hood method relies on the fact that the CO_2 emission rate from the combustion of a particular fuel is very constant. The combustion products from the appliance being tested are collected in a hood. Emission rates for any measured pollutant can be calculated from the ratio of its concentration to the CO_2.

Inside the environmental chamber, a stainless-steel hood was placed over the heater to be tested (see Fig. 2). The hood was connected, via sheet metal and metal flexhose ducting, to an exhaust blower and regulator valve. The pollutants were vented outside of Building 44. All parts of the flue system upstream of the sampling probe were constructed of nonreactive materials such as stainless steel or Teflon. A baffle was placed in the inlet of the duct to promote mixing. Ports for sampling probes were placed at points in the ductwork that allowed for removal of a representative well-mixed sample of diluted combustion products from the appliance being tested.

The exhaust flow rate in the hood was set high enough so that the hood collected the entire mass of combustion products emitted from the device being tested. However, the dilution of combustion products was not so great as to sacrifice the accuracy of pollutant measurements. Finally, the pollutant concentrations were kept within the ranges of the gas analyzers used.

The hood was placed directly above the heater. The pollutants were measured from the hood ductwork at least 15 cm downstream of the mixing baffle. The concentrations of CO_2, CO, NO, NO_2, NO_x, and O_2 were measured every minute. Temperature and humidity were also measured every minute both inside and outside the duct. Measurements of the background concentrations of these parameters were made in the dilution air around the heater (in the chamber) and in the makeup air entering the chamber. Integrated measurements began when CO and CO_2 levels in the duct reached steady state, and measurements continued until a sufficient sample was collected. Fuel consumption rates were also measured during each test.

The basic theory underlying the hood method is that combustion devices emit carbon dioxide at a constant rate that is proportional to their fuel consumption rate. Thus, if a representative instantaneous sample of emissions from a combustion appliance is taken, the amount that the sample has been diluted by surrounding air can be calculated if the concentration of CO_2 is measured and the theoretical CO_2 emission rate for the fuel is known. Furthermore, the emission rate of any other product of combustion can be found by the simple

relationship between the CO_2 concentration, the theoretical CO_2 emission rate, and the concentration of the other product. The mathematical relationship is

$$E = E_{CO_2} \frac{\Delta C}{\Delta CO_2} \tag{4}$$

where E = emission rate of the measured pollutant (μg/kJ),

E_{CO_2} = theoretical emission rate of CO_2 for fuel used (μg/kJ),

ΔC = concentration of pollutant of interest minus background ($\mu g/m^3$), and

ΔCO_2 = concentration of CO_2 measured minus background ($\mu g/m^3$).

The theoretical CO_2 emission rates are 51,000 μg/kJ for natural gas and 71,300 μg/kJ for kerosene.

Source strengths in μg/hr can be determined by the relationship:

$$S = E \cdot R \tag{5}$$

where R = fuel consumption rate (kJ/hr), and

S = source strength (μg/hr).

The amount of dilution air or the amount of ambient air that mixes with the combustion pollutants is accounted for by measuring the ΔCO_2 concentration in the hood. However, if we did want to know the dilution factor we would divide the measured ΔCO_2 by the theoretical "air-free" CO_2 concentration (for natural gas the "air-free" concentration is approximately 12%).

When continuous data are available for the pollutant being measured, continuous pollutant emission rates can be determined using this method. This is not the case for continual or time-weighted average pollutant concentration measurements, which will yield average emission rates over the period sampled.

Although the hood method is quite simple, it involves certain assumptions. The first and probably the most important assumption is that the sample taken is representative of the pollutant mixture being produced by the combustion device. Proper hood design, flow rates, and mixing baffles should ensure this; in this study, tests were conducted to confirm good mixing. A second assumption is that all the pollutants being measured are from the combustion device. This is ensured by measuring the background air every 1/2 hour and subtracting the average background pollutant concentrations from the concentrations measured in the hood. A third assumption in the model is that the pollutants do not react with the interior hood surfaces. Nonreactive materials such as teflon and stainless steel were used in the hood to minimize any such reactions.

RESULTS AND DISCUSSION

COMPARISON OF HOOD AND CHAMBER TECHNIQUES

Tables 5 and 6 summarize the NO, NO_2, N(of NO_x), CO, HCHO, and TSP emission rates for a radiant kerosene heater and an infrared natural-gas heater tested using the hood and chamber techniques. Both initial (Burn 1) and steady-state (Burn 2) emission rates were reported.

The most striking difference between the two emission-rate measurement techniques was observed for the NO emission rate during the second burn of the radiant kerosene heater test. The chamber technique measured an average emission rate of 0.01 μg/kJ, whereas the hood technique measured an average emission rate of 1.03 μg/kJ. None of the other hood-versus-chamber emission-rate differences were that dramatic; however, most of the NO_2 and N(of NO_x) emission-rate comparisons were significantly different at the 90% confidence level. For NO_2, the chamber method measured 10-30% higher emission rates than did the hood method. Although statistically significant at the 90% confidence level, a difference in emission rates of 10-30% is not considered to be a major discrepancy.

The major difference observed for CO emission rate by each method was again during the second burn of the radiant kerosene heater. The chamber method yielded a CO emission rate of 172 μg/kJ, whereas the hood method yielded 93 μg/kJ. No other major differences in CO emissions were observed. The large test-to-test variation of HCHO and TSP emission-rate measurements prevented any meaningful conclusion about differences being caused by the measurement technique employed. However, it was more difficult to obtain a TSP emission rate using the hood method, and we were only able to get a steady-state (Burn 2) TSP emission rate using the hood method because of testing logistic difficulties.

In general, the differences in emission rates recorded by the hood and chamber techniques were minor. The differences that were observed could be explained by the fact that the chamber method allows the oxygen level of the heater's combustion air to drop, whereas the hood method keeps the combustion-air oxygen concentration at ambient concentrations (approximately 20.9%). This idea is reinforced by the difference between the hood and chamber NO and CO emission rates for the first and second burns of the radiant kerosene heater. In the chamber method, the combustion-air oxygen level is lower during the second burn than during the first burn, so any difference in emission rates caused by differences in combustion-air oxygen levels would logically be more dramatic during the second burn. Another probable result of the difference in combustion-air oxygen levels was the 9% higher fuel consumption rate of the radiant heater during hood tests, as compared to chamber tests.

Since oxygen levels do drop in real residences when unvented combustion space heaters are used, there is reason to believe that the emission rates derived from the chamber technique are more accurate. This would be especially true for unvented combustion appliances that are very sensitive to combustion-air oxygen levels, such as some convective unvented gas space heaters (Traynor et al., 1985). It is not always possible to determine whether a particular appliance is oxygen sensitive *a priori*. In such cases, the chamber method would be preferable. However, if the appliance is not oxygen sensitive, or if the oxygen level does not decrease substantially when the appliance is used, as is the case for gas cooking ranges that are used sparingly compared with space heaters, then it appears that the hood and chamber techniques will yield similar results for NO, NO_2, and CO. The results presented here are in general agreement with Moschandreas et al., (1986a, 1986b).

SELECTED ORGANIC POLLUTANT EMISSIONS FROM UNVENTED KEROSENE HEATERS

Carbon Monoxide, Nitric Oxide, and Nitrogen Dioxide

CO, NO, and NO_2 emission-rate results for each test that employed organic pollutant samples are presented in Table 7. As previously described, these tests are distinctly different from the ones used to compare the hood and chamber techniques. The emission-rate results for the well-tuned radiant heater are consistent with previously published data (Leaderer, 1983; Traynor et al., 1983). The results for the maltuned convective heater show that total nitrogen oxide (NO and NO_2 = NO_x) emissions are 27% lower than for a well-tuned convective heater. A well-tuned heater will emit approximately 15 μg/kJ of N (of NO_x) (Traynor et al., 1983); the maltuned convective heater emitted approximately 11 μg/kJ of N (of NO_x). The CO emissions from the maltuned-convective heater were similar to those from a well-tuned heater. This is not expected to be a universal result but is probably unique to the method of maltuning,i.e., supplying excess air to the combustion region, used in this study.

TCO, GRAV, and TSP Mass

Table 8 lists the TSP mass and GRAV concentration results for filter-collected samples. Both TSP mass and GRAV concentrations were higher for the maltuned-convective-heater tests than for the radiant-heater tests. However, the ratio of GRAV to TSP mass was much lower for the maltuned-convective-heater tests than for the radiant-heater tests. This observation is consistent with a previously reported observation that increased sooting does not cause a proportionate increase in organic pollutants (Howard and Longwell, 1983).

Table 9 lists the GRAV and TCO results for XAD-collected samples. Again, notice that the GRAV and TCO indoor concentrations for the well-tuned-radiant and the maltuned-convective tests are not very different, despite the great difference in TSP concentrations. Tables 8 and 9 clearly indicate that most kerosene heaters do emit some organic pollutants and, based on GRAV results, that most of the organic pollutants were trapped by the XAD-2 resin. TCO analysis was not performed on the filter-collected samples under the assumption that compounds with boiling points lower than 300°C would pass through the filter and be collected on the XAD. As will be discussed later in this report, the assumption was good for the well-tuned-radiant-heater tests but was not as applicable for the maltuned-convective-heater tests. For the latter tests, the heavy soot loading on the filters trapped a significant fraction of many SVOCs before they reached the XAD.

Nitrated-PAH and Other Organic Compounds

Samples of similar types were combined before organic and nitrated-PAH compound analyses were conducted. XAD samples were not mixed with filter samples. Samples for radiant tests coded RAD-1, RAD-2, RAD-4, and RAD-5 were combined (note that the TCO results for RAD-3 were much higher than for the other radiant tests so RAD-3 was analyzed separately); samples from maltuned-convective tests MCON-1 and MCON-2 were combined; and samples from CONTROL-1 and CONTROL-2 were combined. Indoor and outdoor samples were not mixed but were combined individually with their counterparts from other tests using the above scheme. The final result was eight XAD and eight filter samples: two indoor radiant, two outdoor radiant, one indoor convective, one outdoor convective, one indoor control, and one outdoor control.

For convenience and ease of reporting, results of the contribution of a kerosene heater to indoor air pollution concentrations will be expressed as pollutant source strengths while the heater is on. Lower-limit indoor concentrations can be calculated using the steady-state form of Eq. 2, if the outdoor concentration is assumed to be zero. Pollutant emission rates (expressed in units of mass of pollutants per kJ of fuel consumed) can be calculated by dividing the source-strength values by 7000 kJ/h. Rough error-propagation analyses have been conducted on our calculations of pollutant source strengths using approximate precision estimates for the variables in Eq. 2.

Except where noted, the omission of a source-strength value from the paper is the result of one of three possibilities: we did not look for the pollutant, we looked for the pollutant but did not find it, or the pollutant source strength was not significantly different from zero. In the last circumstance, qualitative judgments were used in some cases, e.g., when the limit of detection of a compound was only approximately known and no outdoor concentrations were reported.

For comparison with other source-strength tables, the source strengths for TCO, GRAV, and TSP mass are given in Table 10.

Table 11 lists the source strengths of several nitrated-PAHs. The nitrated-PAHs searched for are listed in the "Experimental Methods" section. One-nitronaphthalene is clearly emitted by the well-tuned radiant and maltuned convective kerosene space heaters. One-nitronaphthalene was collected almost entirely on the XAD for the radiant-heater tests. For the maltuned-convective-heater tests, thirty percent of the nitronaphthalene was collected on the filter. This is presumably a result of collection by the heavy loading of fresh soot on the filter during the maltuned-convective test.

Emissions of 9-nitroanthracene were observed in the XAD fraction of one of the radiant-heater tests and in the filter fraction of the maltuned-convective test. (Again, the heavy soot loading on the filters of the convective tests may have captured the 9-nitroanthracene before it reached the XAD.) Emissions of 1-nitropyrene were also observed in the filter fraction of both radiant-test samples, whereas only trace amounts of 3-nitrofluoranthene were observed in one of the two series of radiant-heater tests in the filter-collected fraction.

Both 3-nitrofluoranthene and 1-nitropyrene have been observed to be somewhat mutagenic (Tokiwa et al., 1985; Rosenkranz and Mermelstein, 1985), but the mutagenic activities of 1-nitronaphthalene and 9-nitroanthracene are low (Rosenkranz and Mermelstein, 1985). Notably missing from Table 11 are the highly mutagenic dinitropyrenes (DNPs). The 1,3-DNP; 1,6-DNP; and 1,8-DNP combined source strengths were measured by another research team to be approximately 0.2 ng/h (Tokiwa et al., 1985). The estimated limit of detection in terms of source strengths for DNPs or other nitrated-PAHs investigated for this report is 1.0 ng/h. Future studies could take advantage of various fractionation and cleanup techniques to improve the detection sensitivity for this class of compounds; however, such elaborate techniques were not appropriate for this exploratory study.

Table 12 presents pollutant source-strength results for selected organic pollutants emitted from the well-tuned and maltuned convective heaters. Although the table contains more information than can be discussed here, two topics are of particular interest: 1) the differences in relative source strengths among the three test/sample categories and 2) the PAH emissions.

There is a striking difference in relative source strengths between the RAD-1,2,4, and 5 tests on the one hand and the RAD-3 test on the other. The alkyl benzene emissions from the RAD-3 test were much greater than those from the other radiant-heater tests, whereas the

aliphatic hydrocarbon and aliphatic ketone emissions from the RAD-1,2,4, and 5 tests were much greater than those from the RAD-3 test. From an experimental point of view, all five radiant-heater tests were identical, yet the emission spectra of the RAD-3 test are dramatically different from the other radiant tests.

The comparison of the convective-test emissions spectra with the radiant tests reveals both similarities and differences. The PAH, phthalate, and aliphatic-alcohol emissions for the radiant and convective tests are very similar, yet the aliphatic ketone and, particularly, the pentachlorophenol emissions are much greater in the convective tests than in the radiant tests. Since pentachlorophenol was used as a calibration standard for this analysis and some pentachlorophenol was emitted during the radiant-heater tests, we must conclude that the convective-heater pentachlorophenol source strength presented in Table 12 is valid, although the authors do not understand how such a compound could be produced in a kerosene flame. Higher levels of acidic compounds such as ketones, acids, and esters were emitted from the maltuned convective heater than from the well-tuned radiant heater. This result is expected since such acidic compounds are indicative of incomplete combustion. Also of interest is the observation that many SVOCs were trapped by the soot-laden filter during the convective tests.

Relatively few PAHs were observed to be emitted by the kerosene heaters using the very-broad GC/MS scanning technique employed in this study. Other PAHs would probably be found if a more compound-specific technique were employed. Our analysis shows naphthalene to be the primary PAH emission from kerosene heaters. Emissions of fluoranthene and indeno(c,d)pyrene, two slightly mutagenic compounds (Kaden et al., 1979; National Research Council, 1983) were also found. Previous research from a turbulent-diffusion continuous-flow kerosene combustor showed that 18 nonvolatile or particle-bound PAHs were emitted (Kaden et al., 1979); naphthalene accounted for only 3% of the particle-bound PAHs. The earlier study also found that relatively few PAHs accounted for the mutagenic activity of the kerosene-heater soot. Of those compounds, only fluoranthene was also observed in this study. A more specific study of PAH emissions using more sensitive techniques is warranted.

CONCLUSIONS

In general, the hood and chamber emission-rate measurement techniques yield similar results for CO, NO, and NO_2. However, when discrepancies were observed, they were, we believe, caused by differences in combustion-air oxygen levels. The chamber method results were judged to be more realistic since this method allows the oxygen content of the combustion air to drop, as would occur in actual residences. The hood method appears to be adequate for quantifying CO, NO, and NO_2 emission rates from appliances that are not oxygen sensitive or from appliances that marginally affect a residence's oxygen level, such as a gas range. The chamber method was preferable for measuring total suspended particulate emissions, primarily because it was easier to implement. No disadvantages to the chamber method were discovered.

With regard to organic pollutant emissions from kerosene heaters, this study has confirmed the results of other studies, i.e., that the kerosene combustion process can emit PAHs and nitrated-PAHs. In addition, kerosene heaters were found to emit many other organic compounds, including aliphatic hydrocarbons, alcohols, and ketones; phthalates; alkyl benzenes; and pentachlorophenol. These results need to be correlated with health-effects data to determine the risk associated with these organic emissions. PAH and nitrated-PAH emissions are sufficiently important to justify additional quantitative studies; furthermore, examinations of other organic compounds of toxicological significance and of unvented combustion sources

should be expanded.

One very important observation of this study was that some approximate values of the indoor reactivity of SVOCs were found to be higher than 2 h^{-1}. This implies that reactivity rates for some SVOCs are more important than ventilation rates for determining indoor concentrations. Clearly, this indicates that future studies must quantify the indoor reactivity process for individual SVOCs so we can better understand and quantify indoor exposures to these compounds.

ACKNOWLEDGMENTS

The authors would like to thank G. Tucker, D. Sanchez, B. Henschel, J. Crum, J. White, and J. Lewtas of the U.S. Environmental Protection Agency (Research Triangle Park, NC); W. Gutknecht of the Research Triangle Institute (Research Triangle Park, NC); and J. McCann and A. Carruthers of the Lawrence Berkeley Laboratory for their assistance during various phases of this project.

REFERENCES

ANSI (1982). American National Standard for Household Cooking Appliances. American National Standards Institute, Inc., New York (ANSI Z21.1-1982).

Apte M.G., and Traynor G.W. (1986). Comparison of pollutant emission rates from unvented kerosene and gas space heaters. In IAQ '86: Managing Indoor Air for Health and Energy Conservation, American Society of Heating, Refrigerating and Air-Conditioning Engineers (ASHRAE) Publications, Atlanta, GA, pp. 405-416.

Chuang J.C., Hannon S.W., Danison T.H., and Cooke W.M. (1986). Final Report on Analytical Support for the Combustion Appliance Characterization Study. Battelle, Columbus Division, 505 King Ave., Columbus, OH 43201-2693.

Himmel R.L., and DeWerth D.W. (1974). Evaluation of the pollutant emissions from gas-fired ranges. Report No. 1492, American Gas Association Laboratories, Cleveland, OH.

Howard J.B., and Longwell J.P. (1983). Formation mechanism of PAH and soot in flames. In Polynuclear Aromatic Hydrocarbons: Formation, Metabolism and Measurement, M. Cooke and A.J. Dennis, Eds., Battelle Press, Columbus OH, pp. 27-62.

Kaden D.A., Hites R.A., and Thilly W.G. (1979). Mutagenicity of soot and associated polycyclic aromatic hydrocarbons to Salmonella typhimurium. Cancer Research 39, pp. 4152-4159.

Leaderer B.P. (1983). Air pollutant emissions from kerosene space heaters. Science 218, pp. 1113-1115.

Lionel T., Martin R.J., and Brown N.J. (1986). A comparative study of combustion in kerosene heaters. Environ. Sci. Technol. 20, pp. 78-85.

Miksch R.R., Anthon D.W., Fanning L.Z., Hollowell C.D., Revzan K., and Glanville J. (1981). Modified pararosaniline method for the determination of formaldehyde in air. Analyt. Chem. 53, pp. 2118-2123.

Moschandreas D.J., Relwani S.M., Macriss R.A., and Cole J.T. (1986a). A comparison of emission rates of unvented gas appliances measured by two different methods. Environ. Intern. 12, pp. 241-246.

Moschandreas D.J., Relwani S.M., Johnson D., and Billick I. (1986b). Emission rates from unvented gas appliances. Environ. Intern. 12, pp. 247-253.

Mumford J.L., Harris, D.B., Williams K., Chuang, J.C., and Cooke, M. (1987). Indoor air sampling and mutagenicity studies of emissions from unvented coal combustion. Environ. Sci. Technol. 21, pp. 308-311.

National Research Council (1983). Polycyclic Aromatic Hydrocarbons: Evaluation of Sources and Effects, National Academy Press, Washington, D.C., p. A-14.

Prado G.P., Lee M.L., Hites R.A., Hoult D.P., and Howard J.B. (1973). Soot and hydrocarbon formation in a turbulent diffusion flame. Proceedings of the 16th International Symposium on Combustion, The Combustion Institute, Cambridge, MA, pp. 649-661.

Rosenkranz H.S., and Mermelstein R. (1985). The genotoxicity, metabolism and carcinogenicity of nitrated polycyclic aromatic hydrocarbons. J. Environ. Sci. Health C3, pp. 221-272.

Ryan P.B., Spengler J.D., and Letz R. (1983). The effects of kerosene heaters on indoor pollutant concentrations: a monitoring and modeling study. Atmos. Environ. 17, pp. 1339-1345.

Skopek T.R., Liber H.L., Kaden D.A., Hites R.A., and Thilly W.G. (1979). Mutuation of human cells by kerosene soot. JNCI 63, pp. 309-312.

Tokiwa T., Nakagawa R., and Horikawa K. (1985). Mutagenic/carcinogenic agents in indoor pollutants; the dinitropyrenes generated by kerosene heaters and fuel gas and liquid petroleum gas burners. Mutuation Research 157, pp. 39-47.

Traynor G.W., Anthon D.W., and Hollowell C.D. (1982). Technique for determining pollutant emissions from a gas-fired range. Atmos. Environ. 16, pp. 2979-2987.

Traynor G.W., Allen J.R., Apte M.G., Girman J.R., and Hollowell C.D. (1983). Pollutant emissions from portable kerosene-fired space heaters. Environ. Sci. Technol. 17, pp. 369-371; Addendum: (1985) Environ. Sci. Technol. 19, p. 200.

Traynor G.W., Girman J.R., Apte M.G., Dillworth J.F., and White P.D. (1985). Indoor air pollution due to emission from unvented gas-fired space heaters. JAPCA 35, pp. 231-237.

Whitby K.T. (1976). Electrical measurements of aerosol. In Fine Particles: Aerosol Generation, Measurement, Sampling and Analysis, Academic Press, Inc., New York, NY.

Yamanaka S., Hirose H., and Takaoa S. (1979). Nitrogen oxide emissions from domestic kerosene-fired and gas-fired appliances. Atmos. Environ. 13, pp. 407-412.

APPENDIX

QUALITY CONTROL EVALUATION REPORT

The analytical techniques used to measure pollutant emissions from kerosene heaters in the study can be classified in two groups--technique for the analysis of nonorganic emissions and techniques for the analysis of organic pollutant emissions. The nonorganic emissions were analyzed at LBL, whereas samples of the organic emissions were sent from LBL to BCD for analysis. Quality control is described in detail in the report.

The nonorganic emissions were measured using well-established sampling and analytical techniques. The tests conducted to compare results from two methods (the "hood" and the "chamber" methods) used these techniques. Since the emission rates of the nonorganic pollutants were well established, and the methods for their measurements were well developed, the quality of the resulting data was expected to be, and in fact was, quite good. Discussion of this, and some exceptions, will follow.

The organic emissions, on the other hand, were not at all well known, the experiments were exploratory in nature, and therefore a semiquantitative approach to the analysis of the organic samples was used. Extreme care was taken at every step of the procedure, from sampling the heater emissions, through the EI, GC/MS analysis of the extracted samples. Ensurance that the samples were not contaminated was provided by careful attention to lab cleanliness and washing procedures and careful storage and shipment of samples, as well as usage of several sets of blanks. The overall accuracies of the methods used were on the order of 30% for the NCI GC/MS analyses and approximately a factor of 3 for the EI, GC/MS. This semiquantitative approach did, however, satisfy the goals of the project, which were to test for and identify a broad range of these compounds.

Table 1 of the report presents the instrumentation we used, with estimates of precision and accuracy in the measurement of the nonorganic emissions. Table 2 presents calibration equipment and standards used for calibrating the gas analyzers as well as the flow control for the medium-volume samplers. The calibration schedules referred to in these tables were rigidly adhered to. If any testing of samplers or analytical equipment identified a problem, the problem was resolved before the experiments were continued.

In the comparison of the hood and chamber techniques, the overall accuracy goals of the project were fulfilled. The emission-rate discrepancies that occurred were, with the exception of the TSP measurements, due to physical differences in the two methods. As discussed in the results section, the chamber method allows the oxygen concentration to change, changing the burner's combustion characteristics, whereas the hood method does not cause this to happen. The TSP emission rates measured by the two methods were very different: this resulted because the temperatures in the hood were much higher than those in the chamber, and we hypothesize that the particles did not have time, and/or were still too hot, to fully coagulate in the hood before being sampled.

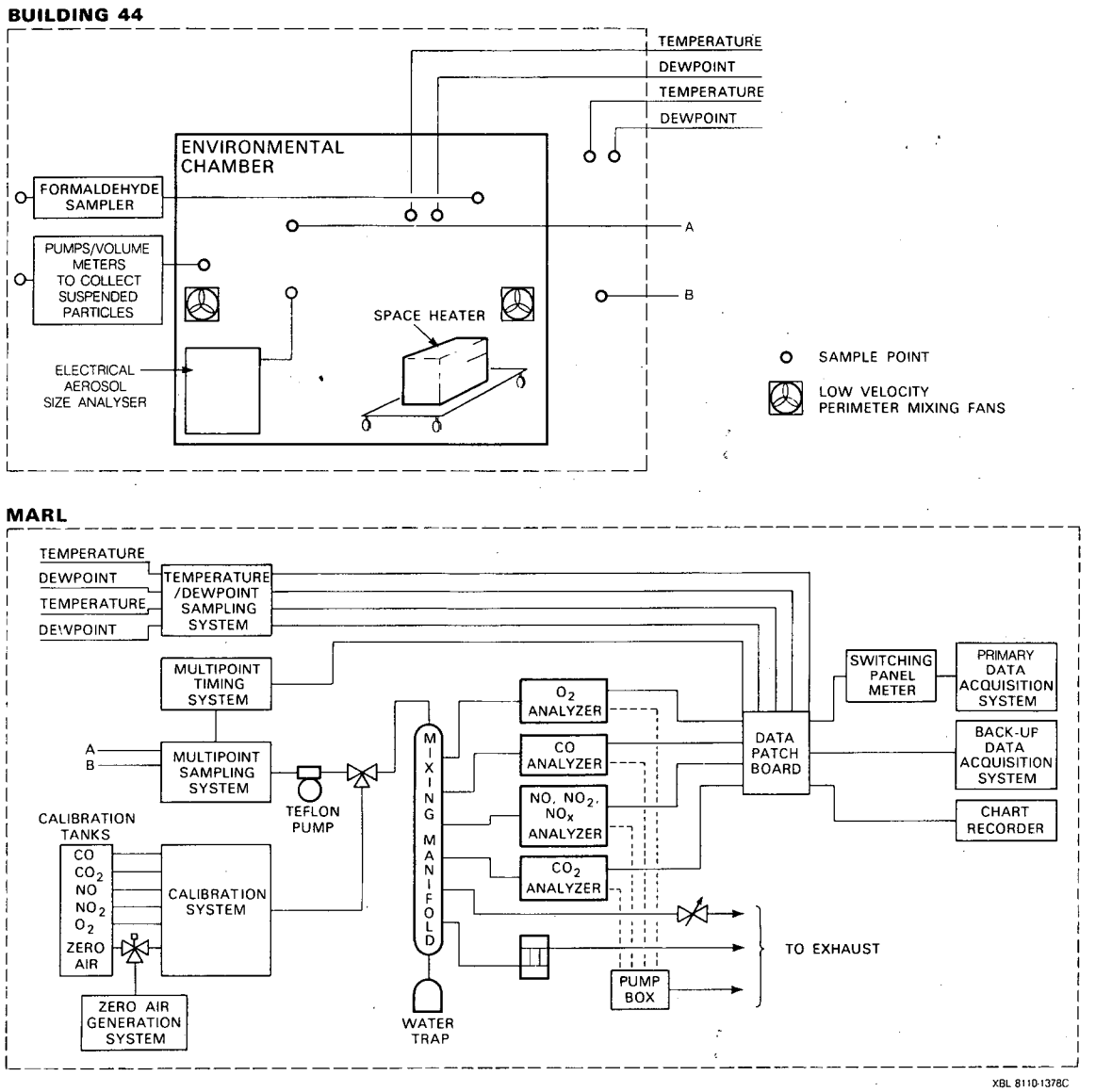

Figure 1. Schematic diagram of environmental chamber and the Mobile Atmospheric Research Laboratory (MARL).

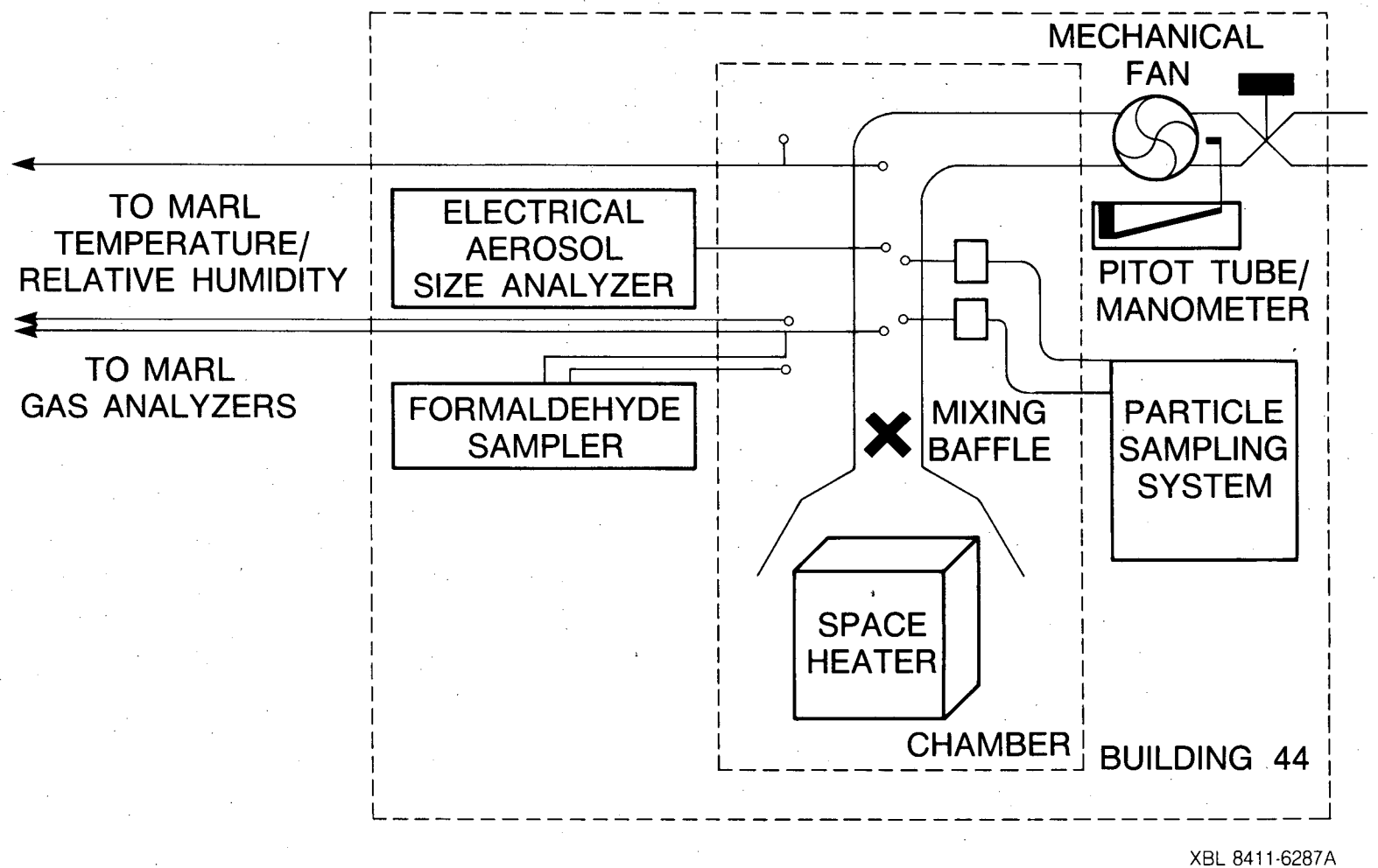

Figure 2. Schematic diagram of the "hood" and ducting inside of the Environmental Chamber.

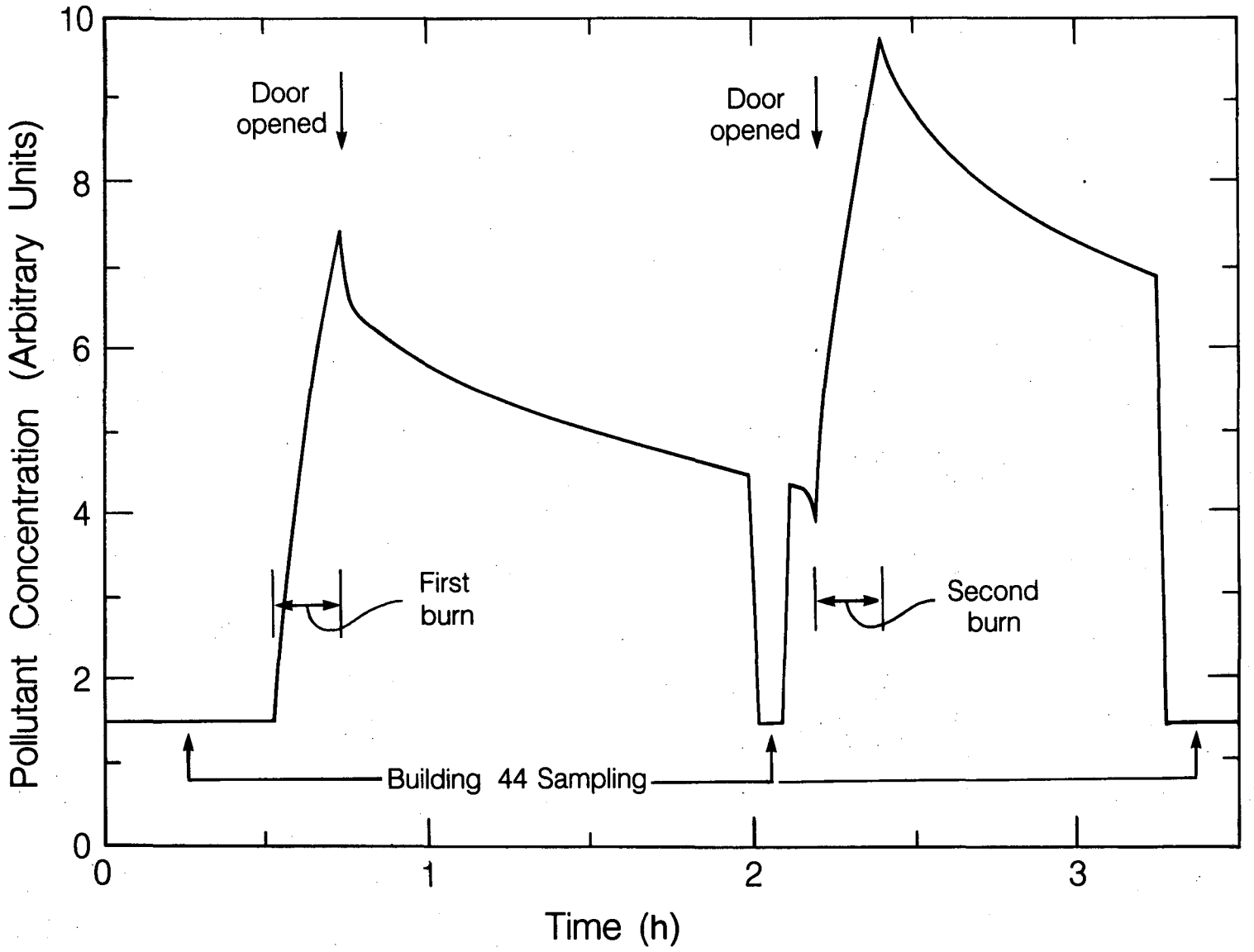

XBL 847-8549

Figure 3. The pollutant profile of a chamber test as seen from a MARL pollutant instrument.

TABLE 1. INSTRUMENTATION FOR APPLIANCE POLLUTANT EMISSION TESTING

PARAMETER	METHOD	MANUFACTURER/ MODEL	MEASUREMENT RANGE	ACCURACY ESTIMATE		PRECISION ESTIMATE		CALIBRATION FREQUENCY	LOCATION
				MANU.	LBL	MANU.	LBL		
CONTINUOUS MONITORS									
CO_2	NDIR	Horiba PIR 2000	0-25%	---	± 5%	± 0.5% FS	± 3%	Daily	MARL
CO	NDIR	Bendix 8501-5SCA	0-50 ppm	---	± 5%	± 1% FS	± 3%	Daily	MARL
NO, NO_2, NO_x	Chemiluminescence	Thermoelectron 14D	0-10 ppm	± 1%	± 5%	± 0.5%	± 3%	Daily	MARL
O_2	Paramagnetism	Beckman 755	16-21 %	---	± 5%	± 5%	± 3%	Daily	MARL
SO_2	Pulsed Fluorescence	Thermoelectron 43	0-5 ppm	---	± 5%	± 1%	± 3%	Daily	MARL
Temperature	Thermistor	Yellowsprings Inc. 701	0-100°C	NA	± 1%	NA	± 1%	6 mo.	MARL
Relative humidity	Hygrometricanical Crystalite & strain gauges	Hygrometrics 8501 A	0-100°C	± 4%	NA	± 1%	NA	6 mo.	MARL
Submicron particles	Electric mobility	Thermosystems Inc. 3030	0-1000 mg/m^3	---	NA	---	NA	---	Chamber
Natural-gas flow rate	Diaphragm gas meter	Singer AL-425	5-425 L/min	± 1%	± 2%	---	± 1%	6 mo.	44
TIME-AVERAGED SAMPLERS									
HCHO	Refrigerated bubblers, colorimetry	LBL		NA	± 30%	NA	± 25%	Daily	44
TSP MASS	Electrobalance	Cahn 21	0-1.5 g	---	± 5%	---	± 2%	Once per sample	44
TSP sample volume	Diaphragm gas meter	Rockwell R-200	0-5.7 m^3/h	± 1%	± 2%	± 1%	± 1%	6 mo.	44
Kerosene metering	Double beam balance	Ohaus	0.1-21 kg	---	± 2%	---	± 1%	6 mo.	44
TSP/XAD-2 sample volume	Pressure-regulated flow controller	LBL	0-7.5 m^3/h	---	± 5%	---	± 3%	Daily	44

TABLE 2. INSTRUMENT CALIBRATION EQUIPMENT

EQUIPMENT	PURPOSE	MANUFACTURER/ MODEL	RANGE	ACCURACY ESTIMATE MANU.	ACCURACY ESTIMATE LBL[a]	PRECISION ESTIMATE MANU.	PRECISION ESTIMATE LBL[a]	CALIBRATION FREQUENCY
Mass flow controller	Metering dilution gas	Tylan FC261	0.4-20 L/min	± 1% FS	± 3%	± 0.2% FS	± 2%	4 mo
	Metering calibration gas	Tylan FC260	4-20 cm^3/min	± 1% FS	± 3%	± 0.2% FS	± 2%	4 mo
Bottled Gases for CO_2, O_2, CO, NO_2, NO, SO_2		Matheson primary standard	NA	---	---	1-2%	---	---
Wet test meter	Mass flow controller calibration	Singer SF-8	0-8 L/min	± 0.5%	± 3%	---	± 1%	6 mo
Bubble test meter	Mass flow controller calibration	Varian 0-60 mL	0-150 cm^3/min	---	± 2%	---	± 1%	---
Dry test meter[b]	Filter/XAD-2 sampling system	Rockwell R-200	0-5.7 m^3/h	± 1%	± 2%	± 1%	± 1%	---

[a]Also represents quality objectives.

[b]Calibrated against primary standard at operating flow rate of approximately 7 m^3/h.

TABLE 3. GC AND MS OPERATING CONDITIONS[a]

Chromatography	
Columns	Ultra #2 crosslinked, 5% phenyl methyl silicon 50 m x 0.32 mm, 0.5-μm film thickness
Carrier	
Carrier linear flow velocity	50 cm/sec at 250°C
Injection volume	1 μL for on-column injection 2 μL for splitless injection
Injection mode	On-column mode[b] and splitless mode[c]
Temperature	
Initial column temperature	45°C
Initial hold time	2 min
Program rate	100°C (5 min) to 320°C at 10°C/min[b], and 45°C to 320°C at 8°C/min
Final hold time	15 min
Mass spectrometer	
Ionization	EI at 70 eV, NCI at 150 eV
Filament emission current	0.35 mA
Preamplifier	10^{-8} A/v
Electron multiplier gain	~10^5

[a]Chuang et al. (1986)

[b]Used for the NCI, GC/MS.

[c]Used for the EI, GC/MS.

TABLE 4. STANDARD COMPOUNDS FOR THE SEMIQUANTITATIVE ANALYSES OF ORGANIC POLLUTANTS[a]

Compound Name	Compound Class	High Level, μg/mL	Low Level, μg/mL
Octane	Aliphatic hydrocarbons	20	10
Decane	Aliphatic hydrocarbons	20	10
Dodecane	Aliphatic hydrocarbons	20	10
Heptadecane	Aliphatic hydrocarbons	20	10
n-Eicosane	Aliphatic hydrocarbons	20	10
Docosane	Aliphatic hydrocarbons	20	10
Naphthalene	Polynuclear aromatic compounds	10	5
Phenanthrene	Polynuclear aromatic compounds	10	5
Pyrene	Polynuclear aromatic compounds	10	5
Chrysene	Polynuclear aromatic compounds	10	5
Benzo(a)pyrene	Polynuclear aromatic compounds	10	5
Benzo(ghi)perylene	Polynuclear aromatic compounds	10	5
Acridine	Nitrogen heterocyclic compounds	10	5
Pentachlorophenol	Phenols	10	5
Benzoic acid	Organic Acids	20	10
1,2,4-Trimethyl-benzene	Base-neutral organic compounds	20	10
Di-n-ethyl phthalate	Phthalate	20	10
Di-n-butyl phthalate	Phthalate	20	10
Di-(2-ethyl hexyl) phthalate	Phthalate	20	10

[a]Chuang et al. (1986).

TABLE 5. NO, NO_2, AND N (OF NO_x) EMISSION RATES FOR HOOD AND CHAMBER METHODS USING A RADIANT KEROSENE AND AN INFRARED NATURAL GAS UNVENTED SPACE HEATERS

	NO (μg/kJ)[a]	NO_2 (μg/kJ)[a]	NO(of NO_x) (μg/kJ)[a]
	RADIANT KEROSENE HEATER		
Burn 1			
Hood	0.86 ± 0.31	4.38 ± 0.35[b]	1.73 ± 0.07
Chamber	0.67 ± 0.15	4.84 ± 0.33	1.77 ± 0.12
Burn 2			
Hood	1.03 ± 0.42[b]	3.71 ± 0.59[b]	1.61 ± 0.08[b]
Chamber	0.01 ± 0.02	4.61 ± 0.29	1.36 ± 0.14
	INFRARED NATURAL-GAS HEATER		
Burn 1			
Hood	0.73 ± 0.17	2.77 ± 0.13[b]	1.[illegible]8 ± 0.06[b]
Chamber	0.92 ± 0.27	3.58 ± 0.56	1.51 ± 0.22
Burn 2			
Hood	0.65 ± 0.48[b]	3.02 ± 0.25[b]	1.22 ± 0.18[b]
Chamber	1.08 ± 0.18	3.81 ± 0.46	1.66 ± 0.10

[a]Plus/minus values relate to 90% confidence interval, sample #4.

[b]Emission-rate results from chamber and hood differ significantly at the 90% confidence level.

TABLE 6. CO, HCHO, AND TSP EMISSION RATES FOR HOOD AND CHAMBER METHODS USING A RADIANT KEROSENE AND AN INFRARED NATURAL-GAS UNVENTED SPACE HEATERS

	CO (μg/kJ)[a]	HCHO (μg/kJ)[a]	TSP (μg/kJ)[a]
	RADIANT KEROSENE HEATER		
Burn 1			
Hood	109 ± 30	0.25 ± 0.33	[b]
Chamber	100 ± 12	0.22 ± 0.14	0.35 ± 0.33
Burn 2			
Hood	93 ± 40[c]	0.42 ± 0.28	0.10 ± 0.06
Chamber	172 ± 33	0.37 ± 0.36	0.16 ± 0.27
	INFRARED NATURAL-GAS HEATER		
Burn 1			
Hood	39 ± 3[c]	0.19[d]	[b]
Chamber	48 ± 9	0.40 ± 0.45	0.17 ± 0.14
Burn 2			
Hood	39 ± 7	0.40 ± 0.25	< 0.05
Chamber	40 ± 6	0.67 ± 0.61	0.69 ± 1.5

[a]Plus/minus values relate to 90% confidence interval, sample #4.

[b]Only one emission-rate measurement was made per test in the hood mode. This rate reflects the emissions of the heaters after they have reached steady- state operation during Burn 2.

[c]Emission rate results from chamber and hood differ significantly at the 90% confidence level.

[d]Only one test.

TABLE 7. CARBON MONOXIDE, NITRIC OXIDE, AND NITROGEN DIOXIDE EMISSION RATES FOR TESTS OF WELL-TUNED RADIANT AND MALTUNED CONVECTIVE HEATERS

Test Code	Average Emission Rate[a] (μg/kJ)		
	CO	NO	NO_2
RAD-1	92 ± 16	0.69 ± 0.16	5.1 ± 0.4
RAD-2	88 ± 11	0.53 ± 0.19	5.0 ± 0.3
RAD-3	77 ± 10	0.69 ± 0.21	5.0 ± 0.3
RAD-4	85 ± 12	0.85 ± 0.24	4.7 ± 0.2
RAD-5	79 ± 4	0.71 ± 0.19	4.6 ± 0.2
MCON-1	22 ± 7	21 ± 3	7.5 ± 1.8
MCON-2	18 ± 4	22 ± 0	5.6 ± 1.6

[a]Radiant (RAD) test averages are from four 1-hour burns. Maltuned-convective (MCON) test averages are from approximately two 1-hour burns. Plus/minus values are standard deviations of the two or four emission rates calculated from each 1-hour burn.

TABLE 8. TOTAL SUSPENDED PARTICULATE MASS AND GRAV[a] CONCENTRATION RESULTS FOR FILTER-COLLECTED SAMPLES FOR WELL-TUNED RADIANT AND MALTUNED CONVECTIVE KEROSENE HEATERS

Test Code	Mass ($\mu g/m^3$) In	Mass ($\mu g/m^3$) Out	GRAV[a] ($\mu g/m^3$) In	GRAV[a] ($\mu g/m^3$) Out
RAD-1	28	18	nm[b]	nm
RAD-2	23	9	nm	nm
RAD-3	24	9	8.2	3.6
RAD-4	14	7	nm	nm
RAD-5	13	2	nm	nm
MCON-1	5300	62	nm	nm
MCON-2	2300	40	100	13
CONTROL-1	5	13	1.6	5.6
CONTROL-2	4	13	nm	nm

[a]GRAV analysis is designed to measure solvent-extractable organics, most of which have boiling points over 300°C.

[b]Not measured.

TABLE 9. TOTAL CHROMATOGRAPHABLE ORGANIC (TCO) AND GRAV CONCENTRATION RESULTS FOR XAD-COLLECTED SAMPLES FOR WELL-TUNED RADIANT AND MALTUNED CONVECTIVE HEATERS

Code	GRAV[a] ($\mu g/m^3$) In	GRAV[a] ($\mu g/m^3$) Out	TCO[b] ($\mu g/m^3$) In	TCO[b] ($\mu g/m^3$) Out
RAD-1	490	190	1400	150
RAD-2	360	120	930	190
RAD-3	510	120	4900	370
RAD-4	450	77	1000	92
RAD-5	380	48	1700	130
MCON-1	500	250	2100	400
MCON-2	360	220	950	240
CONTROL-1	99	94	700	290
CONTROL-2	50	29	100	110

[a]GRAV analysis is designed to measure solvent-extractable organics, most of which have boiling points over 300°C.

[b]TCO analysis is designed to measure solvent-extractable organics with boiling points between 100°C and 400°C.

TABLE 10. TCO, GRAV, AND TSP MASS SOURCE STRENGTHS FOR A WELL-TUNED RADIANT AND A MALTUNED CONVECTIVE KEROSENE HEATER

Pollutant Group	RAD-1,2,4,5 (mg/h)	RAD-3 (mg/h)	MCON-1,2 (mg/h)
TCO-XAD	140	540	160
GRAV-XAD	42	53	38
Filter	nm[a]	0.49	6.9
Total	nm	53	45
TSP	1.1	1.5	270

[a]Not measured.

TABLE 11. NITRATED-PAH SOURCE STRENGTHS FROM A WELL-TUNED RADIANT AND A MALTUNED CONVECTIVE KEROSENE SPACE HEATER

Compounds	RAD-1,2,4,5 (ng/h)	RAD-3 (ng/h)	MCON-1,2 (ng/h)
1-nitronaphthalene			
XAD	280	140	260
Filter	--	3	120
TOTAL	280	140	380
9-nitroanthracene			
XAD	--	53	--
Filter	--	3	41
TOTAL	--	56	41
3-nitrofluoranthene (filter only)	1.9	--	--
1-nitropyrene (filter only)	44	8.2	--

TABLE 12. SELECTED ORGANIC POLLUTANT SOURCE STRENGTHS FROM A WELL-TUNED RADIANT AND A MALTUNED CONVECTIVE KEROSENE SPACE HEATER

COMPOUND CLASS		RAD-1,2,4,5 (μg/h)	RAD-3 (μg/h)	MCON-1,2 (μg/h)
PAH				
Naphthalene	XAD-2	56	230	18
	Filter	--	--	140
C2, Naphthalene (filter only)		--	--	30
C3, Naphthalene (filter only)		1.1	--	4.5
Phenanthrene (XAD only)		1.9	16	5.9
Fluoranthene	XAD-2	--	0.84	--
	Filter	0.11	0.07	1.8
Anthracene (filter only)		--	--	2.27
Chrysene (filter only)		0.05	--	--
Indeno(c,d)pyrene (filter only)		--	0.12	--
Total PAH in XAD-2		58	250	24
Total PAH on filter		1.3	0.2	180
Alkyl benzenes	XAD-2	89	61000	840
	Filter	1.8	--	17
Pentachlorophenol	XAD-2	36	48	--
	Filter	0.34	1.1	920

(Continued)

TABLE 12. - Continued

COMPOUND CLASS		RAD-1,2,4,5 (μg/h)	RAD-3 (μg/h)	MCON-1,2 (μg/h)
Phthalates	XAD-2	1200	3300	3500
	Filter	7.8	13	1500
Hydro Naphthalenes				
Decalin (XAD-2 only)		300	1000	20
C2, Decalin (XAD-2 only)		1800	6500	1800
C1, Tetralin	XAD-2	700	1600	1200
	Filter	--	--	160
Aliphatic Hydrocarbons	XAD-2	1500	--	2900
	Filter	9.4	6.4	1400
Aliphatic Alcohols	XAD-2	10000	4900	4900
	Filter	5.5	32	590
Aliphatic Ketones	XAD-2	670	--	4500
	Filter	--	1.1	--
Benzoic Acids (filter only)		2.3	--	--
Aromatic Acid (XAD-2 only)		--	--	630
Fatty Acids (filter only)		14	18	220
Esters (filter only)		6.4	15	200

(Continued)

TABLE 12. - Continued

COMPOUND CLASS	RAD-1,2,4,5 (μg/h)	RAD-3 (μg/h)	MCON-1,2 (μg/h)
Miscellaneous			
C1, Cyclohexane (XAD-2 ONLY)	--	530	--
C2, Methoxy Benzene (XAD-2 only)	3000	--	--
C2, Ethenyl Benzene (XAD-2 only)	--	680	--
Chlorophenyl Ethanone (XAD-2 only)	--	--	270
Acridene (filter only)	--	--	1.3
Methyl Propoxy Benzene (filter only)	--	--	57
Trichloropropene (filter only)	0.66	--	--
Aliphatic Amine (filter only)	--	--	200

LAWRENCE BERKELEY LABORATORY
TECHNICAL INFORMATION DEPARTMENT
UNIVERSITY OF CALIFORNIA
BERKELEY, CALIFORNIA 94720