LBL-22955
Preprint

Lawrence Berkeley Laboratory
UNIVERSITY OF CALIFORNIA

Materials & Chemical Sciences Division

APR 22 1987
LIBRARY AND
DOCUMENTS SECTION

Submitted to Acta Crystallographica

TRIS(METHYLCYCLOPENTADIENYL)URANIUM(III)
(P-DIMETHYLAMINOPYRIDINE)

A. Zalkin and J.G. Brennan

February 1987

TWO-WEEK LOAN COPY
This is a Library Circulating Copy
which may be borrowed for two weeks.

LBL-22955

Prepared for the U.S. Department of Energy under Contract DE-AC03-76SF00098

DISCLAIMER

This document was prepared as an account of work sponsored by the United States Government. While this document is believed to contain correct information, neither the United States Government nor any agency thereof, nor the Regents of the University of California, nor any of their employees, makes any warranty, express or implied, or assumes any legal responsibility for the accuracy, completeness, or usefulness of any information, apparatus, product, or process disclosed, or represents that its use would not infringe privately owned rights. Reference herein to any specific commercial product, process, or service by its trade name, trademark, manufacturer, or otherwise, does not necessarily constitute or imply its endorsement, recommendation, or favoring by the United States Government or any agency thereof, or the Regents of the University of California. The views and opinions of authors expressed herein do not necessarily state or reflect those of the United States Government or any agency thereof or the Regents of the University of California.

LBL-22955

Tris(methylcyclopentadienyl)uranium(III)(p-dimethylaminopyridine)

By Allan Zalkin & John G. Brennan

Materials and Molecular Research Division, Lawrence Berkeley Laboratory

University of California, Berkeley CA 94720

Abstract. $(CH_3C_5H_4)_3U2(NC_5H_4)N(CH_3)_2$, M_r= 597.57, triclinic, $P\bar{1}$, a = 15.541(6), b = 17.155(7), c = 10.303(4) f, 9 = 106.83(4)˜, β = 106.52(4)°, γ = 67.04(4)°, V = 2374.7 $Å^3$, Z = 4, D_x = 1.671 g cm^{-3}, λ(MoKα)=0.71073 Å, μ = 64.9 cm^{-1}, F(000) = 1148, T = 296 K, R = 0.033 for 3258 unique reflections with $F^2>3\sigma(F^2)$. Two independent but chemically similar molecules are found in the unit cell. The U is at the center of a distorted tetrahedron consisting of a N atom and the centers of 3 cyclopentadienyl rings. Distances are: U-N 2.662(13) and 2.627(12) ß; ave U-C 2.82 ± 0.04 Å; ave U-Cp 2.56 ± 0.02 Å.

Introduction. The coordination chemistry of $(RC_5H_4)_3U$ cannot be adequately described using a purely ionic bonding model; this was dramatically illustrated by the recent observation that, at room temperature, $(Me_3SiC_5H_4)_3U$ readily forms a carbon monoxide complex with a reduced CO stretching frequency (Brennan, Andersen & Robbins, 1986). As part of a study on how steric and electronic factors influence the coordinative affinity of a given Lewis base toward trivalent uranium, we have undertaken the structural characterization of $(MeC_5H_4)_3U$ coordination complexes and describe here the structure of $(CH_3C_5H_4)_3U\cdot(NC_5H_4)N(CH_3)_2$.

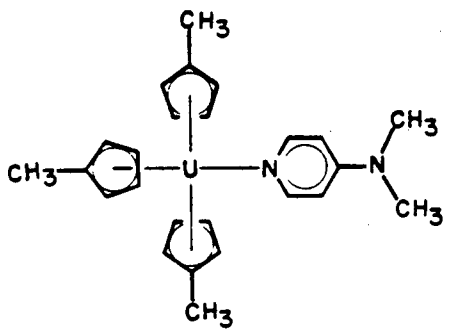

Experimental. Red air-sensitive crystals of the complex, prepared by adding $NC_5H_4NMe_2$ to a solution of $(MeC_5H_4)_3U\cdot OC_4H_8$ (Brennan, Andersen & Zalkin, 1986a) and crystallizing from ether, were sealed inside quartz capillaries under argon. Crystal 0.16 x 0.18 x 0.24 mm with 6 faces; modified Picker automatic diffractometer, graphite monochromator; cell dimensions from 21 reflections, $21° < 2\theta < 33°$; analytical absorption correction, range 1.99 to 3.69; max. $(\sin\theta)/\lambda = 0.54$ Å^{-1}, h -16 to 16, k -18 to 18, ℓ -11 to 11; three standard reflections, 1.1%, 1.6%, 1.4% variation in standards intensities from average, intensities adjusted isotropically; 12468 data, 6240 unique (including 3258, $F^2 < 3\sigma$), $R_{int} = 0.043$; structure solved by Patterson and Fourier methods; refined on F, 475 parameters; 32 hydrogen atoms in calculated positions and fixed isotropic thermal parameters; anisotropic

thermal parameters for non-hydrogen atoms with the exception of C(13)-C(18); R = 0.099 for 6240 data, R = 0.033 for 6052 reflections for which $F^2 > 3\sigma$, wR = 0.038, S = 1.26; $w = [\sigma(F)]^{-2}$, derived from $\sigma^2(F^2) = \{[\sigma(F^2)$,counting statistics only$]+(0.04F^2)^2\}$; max (shift/σ) = 0.05; empirical extinction correction, $F_{corr} = (1 + 1.8\times10^{-8}I)$; max. and min. of ΔF synthesis 1.6 and -1.2 e A^{-3}; atomic f for neutral U, N and C, and spherical bonded H from International Tables (1974); local unpublished programs and ORTEP (Johnson, 1965).

Very large thermal parameters in cyclopendtadienyl ring C(13)-C(18), indicated severe thermal motion or disorder. To obtain convergence in the least-squares refinements, distance restraints (Waser, 1963) [C-C(cyclopentadiene) 1.39(1), C-C(single bond) 1.54(.01), C(methyl)-C(cyclopentadiene) nearest neighbor 2.52(.03) A] and isotropic thermal parameters were assigned to these atoms.

Atomic parameters are listed in Table 1,* and distances and angles are listed in Table 2. Figures 1 and 2 show the molecules and numbering scheme.

---

*Lists of structure factors, anisotropic thermal parameters, calculated hydrogen positions, distances and angles, and least-squares planes have been deposited with the British Library Lending Division as Supplementary Publication No. (35pp.). Copies may be obtained through The Executive Secretary, International Union of Crystallography, 5 Abbey Square, Chester CH1 2HU, England.

Discussion. The complex $(CH_3C_5H_4)_3U\cdot(NC_5H_4)N(CH_3)_2$ is monomeric in the solid state. Three cyclopentadienyl centroids and a pyridine nitrogen

form a distorted tetrahedron about the metal atom. There are two chemically similar but crystallographically independent molecules in the unit cell, and the comparable bond distances and angles of the two molecules are within 3 standard deviations of each other. Coordination of the pyridine nitrogen rather than dimethylamino nitrogen to the uranium atom is consistent with solution measurements which indicate pyridine quantitatively displaces tertiary amines from $(CH_3C_5H_4)_3U$.

The average Cp-M-Cp angle in $(CH_3C_5H_4)_3U{\cdot}L$, L = $NC_5H_4N(CH_3)_2$ of 117° is comparable to 118° for L = SC_4H_8 ,(Zalkin and Brennan, 1985); 118° for L = $OP(C_6H_5)_3$ (Brennan, Andersen & Zalkin, 1986b); and in $(C_5H_5)_3U{\cdot}OC_4H_8$, 118° (Wasserman, Zozulin, Moody, Ryan & Salazar, 1983). These are distinctly different from the pattern of Cp-M-Cp angles (106°, 109° & 119°) found in $(CH_3C_5H_4)_3U{\cdot}P(CH_3)_3$, (Brennan & Zalkin, 1985), where the phosphine complex is more sterically crowded. There are no exceptionally close contacts between the pyridine ligand and the cyclopentadienyl groups.

The U-N distance of 2.64(2) Å in the title compound can be compared to those in the following three uranium-pyridine complexes: 2.659(4) Å in $U(III)(BH_4)_3[NC_5H_4P(C_6H_5)_2)_2]$ (Wasserman, Moody, Paine, Ryan & Salazar, 1984); 2.61(1) Å in $UO_2(tropolonate)_2(NC_5H_4)$, (Degetto, Marangoni, Bombieri, Forsellini, Baracco & Graziani, 1974); and 2.47(1) in bis(pentane-2,4,-dionate)pyridinedioxouranium, (Alcock, Flander & Brown, 1984). The U-N distance in the title compound is similar to all but the bis(pentane-2,4,-dionate)-pyridinedioxouranium value, indicating an insensitivity of this distance to metal oxidation state or coordination number. The bis(pentane-2,4,-dionate) pyridinedioxouranium complex is curious as the relative short U-N distance is achieved at the expense of a non-linear uranyl geometry (173.5(8)°).

The methyl carbon atoms of the $CH_3C_5H_4$ ligands are out of the plane of the cyclopentadienyl rings by 0.04 ot 0.19 Å, and are on the opposite side from the uranium atom. The nitrogen and methyl carbon atoms of the amino groups are in the plane of the pyridine ring.

As there are no close non-binding contacts, distorted Cp-M-Cp angles or unusual U-L distances in the final structure, it is reasonable to suggest that the relative coordinative affinity of the pyridine ligand in this system is dominated by electronic factors. The planarity of the $N(CH_3)_2$ group indicates a substantive interaction of the nitrogen π electrons with the aromatic ring. The insensitivity of U-N distance to metal oxidation state is in accord with the primarily non-bonding nature of the metal valence electrons.

Helpful discussions with Professor R. A. Andersen are appreciated. This work was supported by the Director, Office of Energy Researach, Chemical Sciences Division of the Department of Energy under Contract Number DE-AC03-76SF00098.

References

Alcock, N. W., Flander, D. J., Brown, D. (1984). J. Chem. Soc. Dalton Trans., 679-681.

Brennan, J. G., Andersen, R. A. & Robbins, J. (1986). J. Amer. Chem. Soc., **108**, 335-336.

Brennan, J. G., Andersen, R. A. & Zalkin, A. (1986a). Inorg. Chem., **25**, 1756-1760.

Brennan, J. G., Andersen, R. A. & Zalkin, A. (1986b). Inorg. Chem., **25**, 1761-1765.

Brennan, J. G. and Zalkin, A. (1985). Acta Cryst., C**41**, 1038-1040.

Degetto, S., Marangoni, G., Bombieri, G., Forsellini, E., Baracco, L. & Graziani, R. J. (1974). J. Chem. Soc. Dalton, 1933-1939.

International Tables for X-ray Crystallography (1974). Vol. IV. Table 2.2, pp. 71-102. Birmingham: Kynoch Press. (present distributor D. Reidel, Dordrecht.)

Johnson, C. K. (1965). ORTEP. Report ORNL-3794. Oak Ridge National Laboratory, Tennessee.

Wasserman, H.J., Moody, D.C., Paine, R.T., Ryan, R.R. & Salazar, K.V. (1984). J. Chem. Soc. Chem. Comm. 533-534.

Wasserman, H. J., Zozulin, A. J., Moody, D. C., Ryan, R. R. & Salazar, K. V. (1983). J. Organomet. Chem., **254**, 305-311.

Waser, J. (1963). Acta Cryst. **16**, 1091-1094.

Zalkin, A. & Brennan, J. G. (1985). Acta Cryst. C**41**, 1295-1297.

Table 1 Atomic Parameters

$B_{eq}=1/3\sum_i\sum_j B_{ij}a_i^*a_j^*a_i\cdot a_j$

	x	y	z	B_{eq}/B
U(1)	0.01034(4)	0.28930(4)	0.14804(5)	4.84
N(1)	0.0786(9)	0.1576(9)	-0.0500(13)	6.32
N(2)	0.1538(10)	-0.0232(9)	-0.4101(16)	7.31
C(1)	0.0288(15)	0.2064(16)	0.3641(20)	7.68
C(2)	0.0138(15)	0.1474(11)	0.2375(23)	7.51
C(3)	-0.0803(14)	0.1836(14)	0.1725(17)	6.47
C(4)	-0.1204(14)	0.2632(15)	0.2605(26)	8.08
C(5)	-0.0539(16)	0.2777(15)	0.3806(24)	8.12
C(6)	-0.0670(19)	0.3547(16)	0.5095(23)	13.70
C(7)	-0.0856(18)	0.4332(16)	0.028(4)	9.96
C(8)	-0.0603(18)	0.3695(26)	-0.075(3)	11.21
C(9)	-0.1143(21)	0.3177(17)	-0.104(3)	11.36
C(10)	-0.1739(15)	0.3503(20)	-0.011(3)	9.37
C(11)	-0.1527(18)	0.4234(18)	0.0795(24)	9.13
C(12)	-0.2038(29)	0.4907(27)	0.194(4)	24.38
C(13)	0.1847(12)	0.3156(11)	0.1690(18)	8.5(5)
C(14)	0.1248(14)	0.3963(12)	0.2218(20)	10.2(6)
C(15)	0.1065(15)	0.3992(13)	0.3460(21)	12.0(7)
C(16)	0.1563(12)	0.3182(11)	0.3750(17)	8.5(5)
C(17)	0.2047(12)	0.2662(11)	0.2671(17)	8.2(5)
C(18)	0.2688(21)	0.1740(13)	0.274(3)	19.9(12)
C(19)	0.0555(12)	0.0848(12)	-0.0953(19)	7.05
C(20)	0.0776(13)	0.0249(10)	-0.2140(18)	7.15
C(21)	0.1294(10)	0.0358(11)	-0.2931(18)	5.84
C(22)	0.1533(11)	0.1108(12)	-0.2443(18)	6.79
C(23)	0.1301(12)	0.1673(11)	-0.1274(19)	7.48
C(24)	0.1279(15)	-0.1044(11)	-0.4526(19)	9.33
C(25)	0.2073(13)	-0.0082(11)	-0.4960(17)	8.29

	x	y	z	B_{eq}/B
U(2)	0.50706(4)	0.76605(3)	0.17079(5)	4.50
N(3)	0.5736(9)	0.6405(8)	0.3081(13)	5.94
N(4)	0.6630(9)	0.4571(9)	0.5664(16)	7.39
C(26)	0.5247(16)	0.6826(15)	-0.1078(18)	8.00
C(27)	0.5203(13)	0.6214(10)	-0.0409(15)	6.19
C(28)	0.4265(13)	0.6486(11)	-0.0208(15)	6.10
C(29)	0.3803(12)	0.7243(13)	-0.0722(17)	7.17
C(30)	0.4398(16)	0.7490(13)	-0.1207(18)	7.32
C(31)	0.4187(18)	0.8222(13)	-0.1908(20)	11.96
C(32)	0.6384(17)	0.8095(22)	0.0925(21)	8.87
C(33)	0.6923(14)	0.7394(15)	0.148(3)	8.86
C(34)	0.6961(12)	0.7589(16)	0.2821(29)	8.01
C(35)	0.6438(16)	0.8466(18)	0.3241(19)	8.12
C(36)	0.6061(15)	0.8802(16)	0.204(3)	8.81
C(37)	0.5533(20)	0.9766(15)	0.1918(29)	15.26
C(38)	0.3245(17)	0.8221(19)	0.241(4)	10.75
C(39)	0.3921(21)	0.8041(15)	0.356(3)	9.40
C(40)	0.4356(15)	0.8659(19)	0.4068(23)	9.08
C(41)	0.4010(17)	0.9212(12)	0.321(3)	8.40
C(42)	0.3295(18)	0.8975(19)	0.2142(25)	9.73
C(43)	0.2716(18)	0.9509(17)	0.1003(26)	15.43
C(44)	0.6187(11)	0.6548(9)	0.4425(16)	5.42
C(45)	0.6488(10)	0.5969(10)	0.5315(15)	5.38
C(46)	0.6326(10)	0.5159(10)	0.4808(17)	5.51
C(47)	0.5862(11)	0.5022(9)	0.3404(16)	6.14
C(48)	0.5614(11)	0.5630(10)	0.2648(14)	6.02
C(49)	0.6502(13)	0.3702(11)	0.5023(19)	8.65
C(50)	0.7082(12)	0.4763(11)	0.7118(17)	7.94

Table 2. Selected distances(Å) and angles(°)

U(1)-N(1)	2.662(13)	U(2)-N(3)	2.627(12)
U(1)-C(1)	2.866(15)	U(2)-C(26)	2.850(16)
U(1)-C(2)	2.819(15)	U(2)-C(27)	2.771(15)
U(1)-C(3)	2.792(15)	U(2)-C(28)	2.791(13)
U(1)-C(4)	2.832(17)	U(2)-C(29)	2.814(14)
U(1)-C(5)	2.927(17)	U(2)-C(30)	2.853(17)
U(1)-C(7)	2.775(20)	U(2)-C(32(	2.801(17)
U(1)-C(8)	2.759(22)	U(2)-C(33)	2.800(18)
U(1)-C(9)	2.807(23)	U(2)-C(34)	2.801(17)
U(1)-C(10)	2.821(18)	U(2)-C(35)	2.835(15)
U(1)-C(11)	2.753(18)	U(2)-C)36)	2.826(18)
U(1)-C(13)	2.856(18)	U(2)-C(38)	2.850(19)
U(1)-C(14)	2.843(21)	U(2)-C(39)	2.751(19)
U(1)-C(15)	2.860(23)	U(2)-C(40)	2.779(19)
U(1)-C(16)	2.837(18)	U(2)-C(41)	2.800(18)
U(1)-C(17)	2.833(17)	U(2)-C(42)	2.857(18)
U(1)-Cp(1)	2.584	U(2)-Cp(4)	2.551
U(1)-Cp(2)	2.528	U(2)-Cp(5)	2.555
U(1)-Cp(3)	2.590	U(2)-Cp(6)	2.549
N(1) - U(1) - Cp(1)	101.7	N(3) - U(2) - Cp(4)	100.5
N(1) - U(1) - Cp(2)	94.9	N(3) - U(2) - Cp(5)	101.0
N(1) - U(1) - Cp(3)	103.2	N(3) - U(2) - Cp(6)	95.8
Cp(1)- U(1) - Cp(2)	117.7	Cp(4)- U(2) - Cp(5)	115.3
Cp(1)- U(1) - Cp(3)	116.0	Cp(4)- U(2) - Cp(6)	118.0
Cp(2)- U(1) - Cp(3)	117.7	Cp(5)- U(2) - Cp(6)	119.3
U(1) - N(1) - C(21)	170.2(6)	U(2) - N(3) - C(46)	173.4(5)

Fig 1. ORTEP drawing of $(CH_3C_5H_4)_3U\cdot(NC_5H_4)N(CH_3)_2$, molecule 1, showing the numbering scheme. 50% probability ellipsoids.,

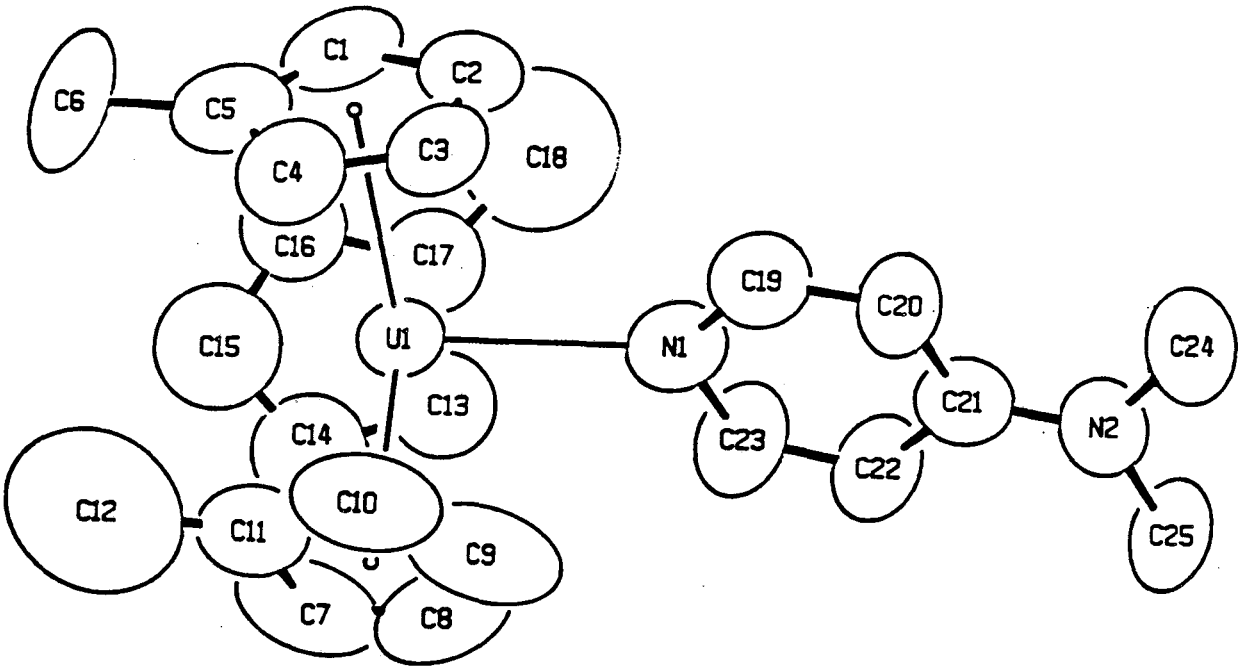

Fig. 2. ORTEP drawing of $(CH_3C_5H_4)_3U\cdot(NC_5H_4)N(CH_3)_2$, molecule 2, showing the numbering scheme. 50% probability ellipsoids.

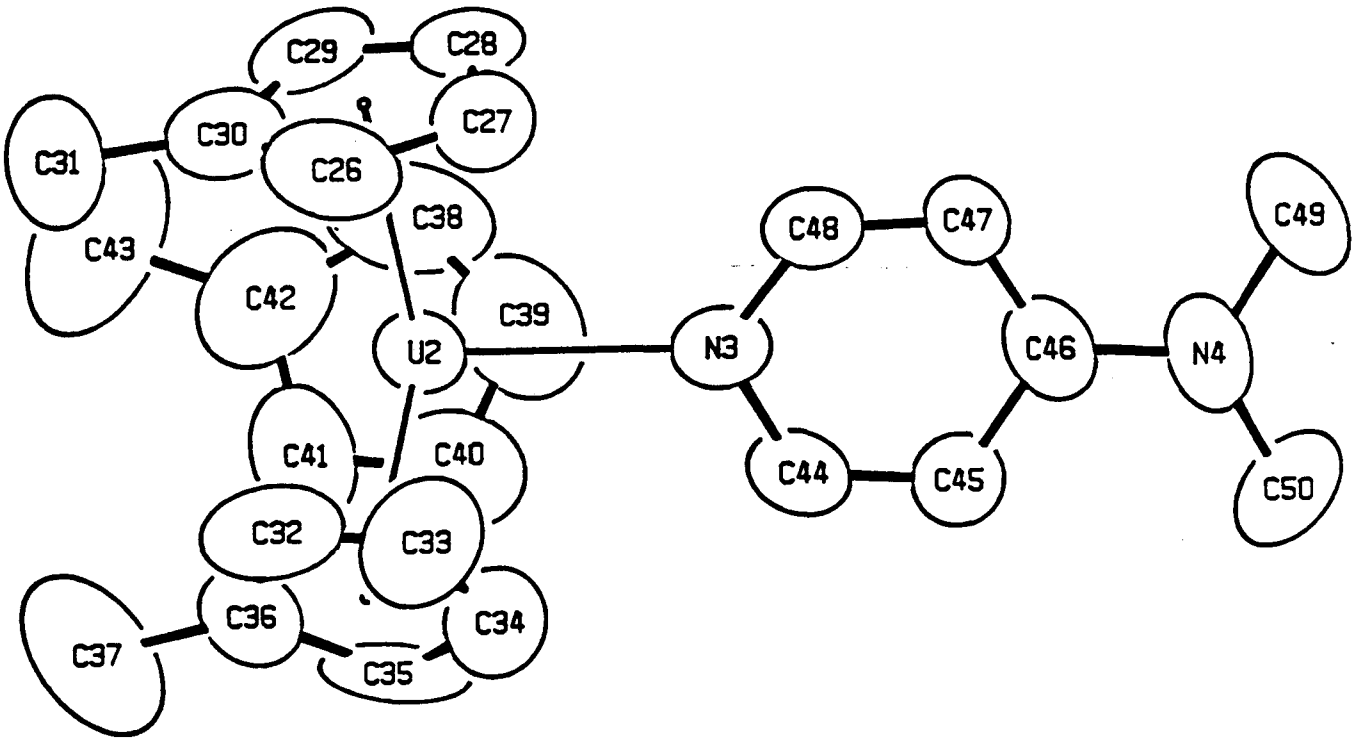

Supplementary Material

Tris(methylcylcopentadienyl)uranium(III)(p-dimethylaminopyridine)

By Allan Zalkin & John G. Brennan

Materials and Molecular Research Division, Lawrence Berkeley Laboratory

University of California, Berkeley CA 94720

Abstract. $(CH_3C_5H_4)_3U\cdot(NC_5H_4)N(CH_3)_2$, M_r= 597.57, triclinic, $P\bar{1}$, a = 15.541(6), b = 17.155(7), c = 10.303(4) Å, α = 106.83(4)°, β = 106.52(4)°, γ = 67.04(4)°, V = 2374.7 $Å^3$, Z = 4, D_x = 1.671 g cm^{-3}, λ(MoKα)=0.71073 Å, μ = 64.9 cm^{-1}, F(000) = 1148, T = 296 K, R = 0.033 for 3258 unique reflections with $F^2>3\sigma(F^2)$. Two independent but chemically similar molecules are found in the unit cell. The U is at the center of a distorted tetrahedron consisting of a N atom and the centers of 3 cyclopentadienyl rings. Distances are: U-N 2.662(13) and 2.627(12) Å; ave U-C 2.82 ± 0.04 Å; ave U-Cp 2.56 ± 0.02 Å.

Supplemental Table 1. Thermal Parameters ($Å^2$) with Estimated Standard Deviations for $(CH_3C_5H_4)_3U\cdot(NC_5H_4)N(CH_3)_2$

Atom	B11	B22	B33	B12	B13	B23
U(1)	4.79(4)	5.45(4)	4.72(4)	-2.232(29)	0.396(27)	1.46(3)
N(1)	6.3(7)	7.3(8)	6.6(8)	-3.4(7)	1.0(6)	1.9(7)
N(2)	8.3(9)	6.1(8)	7.5(10)	-1.8(7)	2.8(8)	0.9(8)
C(1)	9.0(13)	10.7(14)	6.0(11)	-5.5(12)	0.4(10)	3.6(11)
C(2)	9.1(14)	6.6(11)	8.8(13)	-2.4(10)	3.4(11)	3.2(11)
C(3)	7.0(11)	8.2(12)	5.4(10)	-4.2(9)	0.6(9)	1.5(9)
C(4)	6.4(12)	9.9(14)	8.4(14)	-2.4(11)	1.9(11)	2.5(12)
C(5)	6.7(12)	10.4(15)	9.3(15)	-2.3(12)	2.6(12)	4.7(13)
C(6)	20.4(24)	12.6(17)	8.6(14)	-5.4(16)	8.9(16)	-2.9(13)
C(7)	8.5(15)	8.6(15)	16.0(24)	-4.7(13)	0.9(14)	6.1(15)
C(8)	8.3(16)	15.8(26)	9.0(18)	-0.4(18)	1.6(13)	7.0(18)
C(9)	6.2(14)	11.6(18)	15.9(24)	-1.8(14)	-2.7(14)	8.6(18)
C(10)	5.4(11)	11.6(18)	13.0(19)	-4.8(12)	-2.8(11)	6.9(16)
C(11)	8.0(14)	8.8(15)	8.2(14)	1.0(12)	0.6(11)	4.5(13)
C(12)	21.7(36)	20.8(34)	25.0(40)	0.7(28)	3.5(30)	8.4(32)
C(13)	8.5(5)					
C(14)	10.2(6)					
C(15)	12.0(7)					
C(16)	8.5(5)					
C(17)	8.2(5)					
C(18)	19.9(12)					
C(19)	9.0(11)	6.9(10)	8.5(12)	-5.6(9)	3.1(9)	1.1(9)
C(20)	9.8(12)	6.2(10)	6.6(10)	-4.4(9)	3.0(9)	-0.9(8)
C(21)	5.1(8)	6.5(10)	6.7(10)	-2.6(8)	0.5(7)	2.0(9)
C(22)	6.9(10)	8.0(11)	7.0(10)	-3.8(9)	3.3(8)	0.1(9)
C(23)	8.6(11)	8.6(11)	7.9(11)	-5.7(10)	4.0(9)	-0.7(9)
C(24)	14.9(16)	6.1(10)	8.3(13)	-6.6(11)	3.5(11)	-2.1(9)
C(25)	10.1(13)	8.1(11)	7.9(11)	-3.0(10)	5.5(10)	-0.5(9)

Supplemental Table B. Thermal Parameters (A^2) with Estimated Standard Deviations for $(CH_3C_5H_4)_3U\cdot(NC_5H_4)N(CH_3)_2$ (Continued)

Atom	B11	B22	B33	B12	B13	B23
U(2)	4.74(4)	4.41(3)	4.42(3)	-1.911(26)	1.128(26)	0.223(27)
N(3)	7.1(8)	4.9(7)	4.8(7)	-2.6(6)	-0.4(6)	0.1(6)
N(4)	7.4(8)	6.4(8)	9.8(11)	-2.5(7)	1.0(7)	4.1(8)
C(26)	10.7(15)	9.2(13)	5.1(9)	-5.7(12)	3.2(10)	-2.1(9)
C(27)	7.5(11)	5.5(9)	4.7(8)	-2.0(8)	1.2(7)	-0.1(7)
C(28)	6.3(10)	5.1(9)	5.0(8)	-2.7(8)	-0.7(7)	-1.2(7)
C(29)	6.5(10)	7.2(11)	4.7(9)	-2.2(9)	-1.3(7)	-0.8(8)
C(30)	7.9(13)	8.0(13)	5.4(9)	-3.8(11)	0.1(9)	-0.1(9)
C(31)	20.2(22)	8.1(12)	7.4(12)	-6.3(14)	-1.2(12)	3.0(11)
C(32)	8.2(14)	15.8(21)	6.2(12)	-8.2(15)	1.2(10)	1.7(15)
C(33)	5.7(11)	11.4(16)	9.7(16)	-1.6(10)	2.1(10)	3.5(15)
C(34)	5.6(10)	10.1(15)	10.2(15)	-3.6(10)	-0.2(10)	5.1(14)
C(35)	9.5(13)	11.6(15)	5.4(11)	-8.8(12)	1.5(9)	-2.5(11)
C(36)	9.9(14)	11.0(17)	9.4(15)	-7.5(13)	-1.0(12)	5.0(15)
C(37)	19.3(25)	9.0(15)	19.6(25)	-6.1(16)	4.9(19)	2.8(16)
C(38)	4.9(12)	9.0(17)	16.0(23)	-2.2(12)	4.1(13)	-2.7(16)
C(39)	8.3(16)	7.6(14)	12.7(20)	-0.8(13)	6.5(14)	0.8(14)
C(40)	9.2(14)	9.1(15)	8.7(14)	-3.2(13)	3.9(11)	-1.1(13)
C(41)	8.5(14)	5.8(11)	10.8(16)	-0.2(10)	4.3(12)	2.1(12)
C(42)	6.8(13)	9.6(17)	8.9(15)	1.2(12)	3.0(11)	0.2(14)
C(43)	13.0(20)	14.8(20)	12.3(18)	3.2(16)	2.3(15)	4.8(17)
C(44)	6.3(9)	4.7(8)	5.3(9)	-2.6(7)	1.5(7)	-0.4(7)
C(45)	5.7(8)	5.0(8)	5.0(8)	-1.7(7)	0.8(6)	0.8(7)
C(46)	5.4(8)	4.2(8)	7.2(10)	-1.1(7)	2.4(7)	1.1(8)
C(47)	9.1(11)	4.6(8)	4.7(8)	-3.6(7)	-0.5(7)	1.0(7)
C(48)	8.5(10)	5.0(8)	3.7(8)	-3.3(8)	-0.2(7)	-0.6(6)
C(49)	12.4(14)	5.6(10)	9.4(13)	-4.3(10)	2.3(10)	1.7(9)
C(50)	8.2(11)	9.0(11)	5.2(9)	-1.9(9)	-0.6(8)	2.3(9)

Supplemental Table 2. Positional Parameters and Assigned Thermal Parameters for Hydrogen Atoms in $(CH_3C_5H_4)_3U\cdot(NC_5H_4)N(CH_3)_2$

Atom	x	y	z	B,A^2
H(1)	0.0894	0.1980	0.4309	10.0
H(2)	0.0603	0.0923	0.2027	10.0
H(3)	-0.1128	0.1591	0.0832	10.0
H(4)	-0.1857	0.3028	0.2404	10.0
H(5)	-0.0607	0.4813	0.0637	10.0
H(6)	-0.0102	0.3606	-0.1240	10.0
H(7)	-0.1110	0.2666	-0.1786	10.0
H(8)	-0.2217	0.3275	-0.0069	10.0
H(9)	0.2075	0.2976	0.0820	10.0
H(10)	0.0987	0.4458	0.1764	10.0
H(11)	0.0661	0.4486	0.4029	10.0
H(12)	0.1580	0.2993	0.4571	10.0
H(13)	0.0209	0.0738	-0.0404	10.0
H(14)	0.0566	-0.0255	-0.2425	10.0
H(15)	0.1883	0.1230	-0.2970	10.0
H(16)	0.1513	0.2176	-0.0969	10.0
H(17)	0.5810	0.6773	-0.1395	10.0
H(18)	0.5728	0.5704	-0.0145	10.0
H(19)	0.3995	0.6206	0.0199	10.0
H(20)	0.3124	0.7573	-0.0746	10.0
H(21)	0.6238	0.8119	-0.0055	10.0
H(22)	0.7239	0.6820	0.0962	10.0
H(23)	0.7307	0.7180	0.3445	10.0
H(24)	0.6353	0.8778	0.4185	10.0
H(25)	0.2819	0.7895	0.1878	10.0
H(26)	0.4081	0.7543	0.3981	10.0
H(27)	0.4842	0.8695	0.4917	10.0
H(28)	0.4215	0.9701	0.3302	10.0
H(29)	0.6310	0.7097	0.4802	10.0
H(30)	0.6807	0.6116	0.6274	10.0
H(31)	0.5723	0.4484	0.2978	10.0
H(32)	0.5311	0.5490	0.1678	10.0

Supplemental Table 3. Additional Distances in $(CH_3C_5H_4)_3U\cdot(NC_5H_4)N(CH_3)_2$

Atoms	d,Å	Atoms	d,Å
N(1) - C(19)	1.350(18)	N(3) - C(44)	1.361(17)
N(1) - C(23)	1.358(17)	N(3) - C(48)	1.345(17)
N(2) - C(21)	1.369(19)	N(4) - C(46)	1.387(17)
N(2) - C(24)	1.511(20)	N(4) - C(49)	1.511(20)
N(2) - C(25)	1.502(18)	N(4) - C(50)	1.464(19)
C(1) - C(2)	1.424(23)	C(26)- C(27)	1.444(22)
C(2) - C(3)	1.397(22)	C(27)- C(28)	1.404(20)
C(3) - C(4)	1.419(23)	C(28)- C(29)	1.393(20)
C(4) - C(5)	1.399(24)	C(29)- C(30)	1.405(23)
C(5) - C(1)	1.399(24)	C(30)- C(26)	1.368(24)
C(6) - C(5)	1.573(27)	C(31)- C(30)	1.509(24)
C(7) - C(8)	1.306(30)	C(32)- C(33)	1.347(26)
C(8) - C(9)	1.367(34)	C(33)- C(34)	1.312(25)
C(9) - C(10)	1.375(33)	C(34)- C(35)	1.407(24)
C(10)- C(11)	1.419(29)	C(35)- C(36)	1.394(24)
C(11)- C(7)	1.381(28)	C(36)- C(32)	1.446(27)
C(12)- C(11)	1.545(39)	C(37)- C(36)	1.558(28)
C(13)- C(14)	1.387(11)	C(38)- C(39)	1.364(31)
C(14)- C(15)	1.371(11)	C(39)- C(40)	1.376(28)
C(15)- C(16)	1.375(11)	C(40)- C(41)	1.336(25)
C(16)- C(17)	1.405(11)	C(41)- C(42)	1.417(27)
C(17)- C(13)	1.394(11)	C(42)- C(38)	1.432(29)
C(18)- C(17)	1.516(11)	C(43)- C(42)	1.551(28)
C(19)- C(20)	1.380(20)	C(44)- C(45)	1.403(18)
C(20)- C(21)	1.388(19)	C(45)- C(46)	1.430(19)
C(21)- C(22)	1.392(20)	C(46)- C(47)	1.418(19)
C(22)- C(23)	1.348(20)	C(47)- C(48)	1.352(18)

Supplemental Table 4. Additional angles in $(CH_3C_5H_4)_3U\cdot(NC_5H_4)N(CH_3)_2$

C(2) -C(1) -C(5)	111.1(18)	C(27)-C(26)-C(30)	110.7(16)
C(1) -C(2) -C(3)	106.3(16)	C(26)-C(27)-C(28)	107.2(14)
C(2) -C(3) -C(4)	107.1(16)	C(27)-C(28)-C(29)	104.5(16)
C(3) -C(4) -C(5)	110.8(18)	C(28)-C(29)-C(30)	113.8(18)
C(1) -C(5) -C(4)	104.7(20)	C(26)-C(30)-C(31)	124.5(22)
C(1) -C(5) -C(6)	126.3(23)	C(29)-C(30)-C(31)	131.4(22)
C(4) -C(5) -C(6)	129.0(22)	C(26)-C(30)-C(29)	103.6(18)
C(8) -C(7) -C(11)	110.5(24)	C(33)-C(32)-C(36)	107.3(19)
C(7) -C(8) -C(9)	109.3(26)	C(32)-C(33)-C(34)	110.2(23)
C(8) -C(9) -C(10)	108.0(29)	C(33)-C(34)-C(35)	110.5(19)
C(9) -C(10)-C(11)	106.8(21)	C(34)-C(35)-C(36)	105.9(18)
C(7) -C(11)-C(10)	105.2(21)	C(32)-C(36)-C(35)	106.1(20)
C(7) -C(11)-C(12)	124.1(36)	C(32)-C(36)-C(37)	125.4(25)
C(10)-C(11)-C(12)	129.7(35)	C(35)-C(36)-C(37)	127.8(29)
C(14)-C(13)-C(17)	104.7(15)	C(39)-C(38)-C(42)	105.9(21)
C(13)-C(14)-C(15)	112.2(18)	C(38)-C(39)-C(40)	110.4(24)
C(14)-C(15)-C(16)	105.9(18)	C(39)-C(40)-C(41)	108.6(24)
C(15)-C(16)-C(17)	108.8(16)	C(40)-C(41)-C(42)	108.8(22)
C(13)-C(17)-C(16)	108.5(14)	C(38)-C(42)-C(41)	106.2(20)
C(13)-C(17)-C(18)	131.1(17)	C(38)-C(42)-C(43)	131.7(35)
C(16)-C(17)-C(18)	120.3(16)	C(41)-C(42)-C(43)	122.1(32)
U(1) -N(1) -C(19)	125.3(11)	U(2) -N(3) -C(44)	119.1(10)
U(1) -N(1) -C(23)	118.9(11)	U(2) -N(3) -C(48)	127.1(10)
C(19)-N(1) -C(23)	115.0(14)	C(44)-N(3) -C(48)	113.5(13)
N(1) -C(19)-C(20)	124.2(14)	N(3) -C(44)-C(45)	125.0(13)
C(19)-C(20)-C(21)	120.3(15)	C(44)-C(45)-C(46)	119.3(14)
N(2) -C(21)-C(20)	121.8(16)	N(4) -C(46)-C(45)	120.3(16)
N(2) -C(21)-C(22)	123.6(16)	N(4) -C(46)-C(47)	125.0(15)
C(20)-C(21)-C(22)	114.7(16)	C(45)-C(46)-C(47)	114.7(14)
C(21)-C(22)-C(23)	122.7(15)	C(46)-C(47)-C(48)	120.4(13)
N(1) -C(23)-C(22)	123.1(15)	N(3) -C(48)-C(47)	127.2(14)
C(21)-N(2) -C(24)	119.9(14)	C(46)-N(4) -C(49)	117.2(15)
C(21)-N(2) -C(25)	120.5(15)	C(46)-N(4) -C(50)	122.1(14)
C(24)-N(2) -C(25)	119.6(15)	C(49)-N(4) -C(50)	120.7(14)

Supplemental Table 5. Least-squares Planes

Plane No. 1

Equation of plane: 10.46529 a + 13.69559 b - 7.54835 c = 0.37321

Distance to the plane from atoms

in the plane			not in the plane	
atom	d(Å)	σ(d)	atom	d(Å)
C(1)	0.0068	(344)	U(1)	2.580(11)
C(2)	-0.0024	(306)	C(6)	-0.06(5)
C(3)	-0.0012	(300)		
C(4)	0.0054	(331)		
C(5)	-0.0066	(326		

Plane No. 2

Equation of plane: -5.44357 a + 8.85522 b - 6.31165 c = 4.09762

Distance to the plane from atoms

in the plane			not in the plane	
atom	d(Å)	σ(d)	atom	d(Å)
C(7)	0.0299	(475)	U(1)	-2.526(16)
C(8)	-0.0225	(547)	C(12)	0.13(7)
C(9)	-0.0038	(424)		
C(10)	0.0019	(439)		
C(11)	-0.0197	(302)		

Supplemental Table 5. Least-squares Planes (continued)

Plane No. 3

Equation of plane: 13.30970 a + 8.78887 b + 1.73386 c = 5.52662

Distance to the plane from atoms

in the plane			not in the plane	
atom	d(Å)	σ(d)	atom	d(Å)
C(13)	-0.0016	(244)	U(1)	-2.590(9)
C(14)	0.0023	(277)	C(18)	0.05(4)
C(15)	-0.0017	(290)		
C(16)	0.0001	(247)		
C(17)	0.0009	(240)		

Plane No. 4

Equation of plane: 8.78155 a - 6.05300 b + 4.82588 c = -0.49705

Distance to the plane from atoms

in the plane			not in the plane	
atom	d(Å)	σ(d)	atom	d(Å)
N(1)	-0.0080	(190)	N(2)	0.01(3)
C(19)	0.0114	(241)	C(24)	0.07(4)
C(20)	-0.0049	(242)	C(25)	-0.03(4)
C(21)	0.0023	(237)		
C(22)	-0.0067	(248)		
C(23)	0.0118	(234)		

Supplemental Table 5. Least-squares Planes (continued)

Plane No. 5

Equation of plane: 3.74166 a + 7.10333 b +7.36550 c = 6.04921

Distance to the plane from atoms

in the plane			not in the plane	
atom	d(Å)	σ(d)	atom	d(Å)
C(26)	-0.0311	(323)	U(2)	2.547(10)
C(27)	0.0107	(254)	C(31)	-0.05(4)
C(28)	-0.0000	(253)		
C(29)	-0.0132	(278)		
C(30)	0.0279	(314)		

Plane No. 6

Equation of plane: 15.00855 a + 9.91864 b - 1.91639 c = 17.43655

Distance to the plane from atoms

in the plane			not in the plane	
atom	d(Å)	σ(d)	atom	d(Å)
C(32)	-0.0028	(465)	U(2)	-2.555(14)
C(33)	0.0033	(394)	C(37)	0.19(6)
C(34)	-0.0030	(377)		
C(35)	0.0019	(387)		
C(36)	-0.0000	(395)		

Supplemental Table 5. Least-squares Planes (continued)

Plane No. 7

Equation of plane: 10.69187 a - 2.80601 b - 6.43455 c = -0.37284

Distance to the plane from atoms

in the plane			not in the plane	
atom	d(Å)	σ(d)	atom	d(Å)
C(38)	-0.0126	(464)	U(2)	2.546(15)
C(39)	0.0177	(429)	C(43)	-0.04(6)
C(40)	-0.0176	(419)		
C(41)	0.0097	(398)		
C(42)	-0.0005	(413)		

Plane No. 8

Equation of plane: 13.79884 a + 0.16961 b - 4.57432 c = 6.62023

Distance to the plane from atoms

in the plane			not in the plane	
atom	d(Å)	σ(d)	atom	d(Å)
N(3)	-0.0061	(175)	N(4)	0.015(26)
C(44)	0.0036	(204)	C(49)	0.12(3)
C(45)	0.0024	(208)	C(50)	-0.02(3)
C(46)	-0.0035	(219)		
C(47)	-0.0029	(216)		
C(48)	0.0102	(212)		

This report was done with support from the Department of Energy. Any conclusions or opinions expressed in this report represent solely those of the author(s) and not necessarily those of The Regents of the University of California, the Lawrence Berkeley Laboratory or the Department of Energy.

Reference to a company or product name does not imply approval or recommendation of the product by the University of California or the U.S. Department of Energy to the exclusion of others that may be suitable.

LAWRENCE BERKELEY LABORATORY
TECHNICAL INFORMATION DEPARTMENT
UNIVERSITY OF CALIFORNIA
BERKELEY, CALIFORNIA 94720