LBL-23012 c2

Lawrence Berkeley Laboratory
UNIVERSITY OF CALIFORNIA

Materials & Chemical Sciences Division

RECEIVED
LAWRENCE
BERKELEY LABORATORY

APR 22 1987

LIBRARY AND
DOCUMENTS SECTION

Center for Advanced Materials

To be presented at the Microbeam Analysis Society Conference, Kona, HI, July 13-17, 1987

USING DYNAMIC TEM TO STUDY THERMAL AND STRAIN-INDUCED EFFECTS ON BLOCK COPOLYMER MICROSTRUCTURES

R.J. Spontak and M.C. Williams

February 1987

TWO-WEEK LOAN COPY
This is a Library Circulating Copy
which may be borrowed for two weeks.

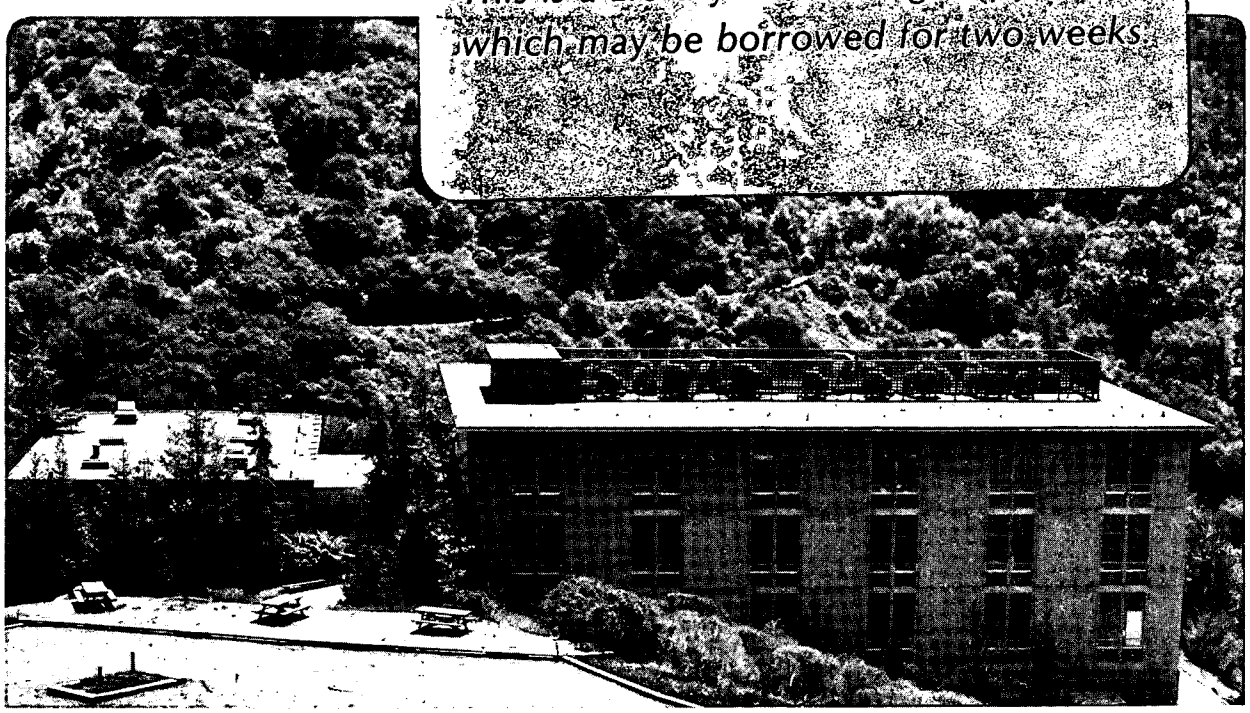

LBL-23012 c2

Prepared for the U.S. Department of Energy under Contract DE-AC03-76SF00098

DISCLAIMER

This document was prepared as an account of work sponsored by the United States Government. While this document is believed to contain correct information, neither the United States Government nor any agency thereof, nor the Regents of the University of California, nor any of their employees, makes any warranty, express or implied, or assumes any legal responsibility for the accuracy, completeness, or usefulness of any information, apparatus, product, or process disclosed, or represents that its use would not infringe privately owned rights. Reference herein to any specific commercial product, process, or service by its trade name, trademark, manufacturer, or otherwise, does not necessarily constitute or imply its endorsement, recommendation, or favoring by the United States Government or any agency thereof, or the Regents of the University of California. The views and opinions of authors expressed herein do not necessarily state or reflect those of the United States Government or any agency thereof or the Regents of the University of California.

USING DYNAMIC TEM TO STUDY THERMAL AND STRAIN-INDUCED EFFECTS ON BLOCK COPOLYMER MICROSTRUCTURES

R.J. Spontak and M.C. Williams

Transmission electron microscopy (TEM) has traditionally been utilized to study the static nature of microstructures resulting from microphase separation in block copolymers. Such investigations have provided much useful data on morphological variations, microstructural dimensions, and interphase composition gradients.[1] Until now, information on the time-dependent response of these microstructures to changes in temperature and strain has been acquired indirectly, through bulk dynamic mechanical tests[2] or scattering experiments.[3] Since such dynamic information can be vital in more thoroughly understanding polymeric phase-transformation processes and deformation mechanics, methods for studying the dynamic responses of block copolymer microstructures in-situ with the use of TEM are presented here.

Experimental

The copolymers used in this study were composed of blocks (sequences) of either polystyrene (PS) and polybutadiene (PB) or polysiloxane (PSi) and a polyimide (PI). From static TEM studies, the linear PS-PB-PS (triblock) copolymers [Cosden Chemical Co.] are known to possess phase-separated structures consisting of cylindrical PS domains in a PB matrix or alternating lamellae, depending on the PS

Authors Spontak and Williams are at the Lawrence Berkeley Laboratory (Center for Advanced Materials) and the University of California, Berkeley (Dept. of Chemical Engineering), Berkeley, CA, 94720. This work was supported by the Director, Office of Energy Research, Office of Basic Energy Sciences, Materials Science Division of the U.S. Department of Energy under Contract No. DE-AC03-76SF00098.

content. The comb PSi-PI copolymer [M&T Chemical Co.] possesses spherical domains of PSi in a PI matrix. TEM samples were cast from solution. In the case of the PS-PB copolymers, toluene was used; n-methyl-2-pyrrolidone was the solvent for the PSi-PI copolymer.

A specimen holder was designed to study morphologies undergoing dynamic tensile deformation. This holder, shown schematically in Fig. 1, was comprised of two sliding brass plates connected by a segment of a 300 linear-mesh copper grid, which provided polymeric thin films (measuring approximately 200 nm thick) with sufficient structural support. The grid, aligned with the axis of strain and attached to the plates with an insoluble adhesive, was the only disposable part of the entire holder. Films of PSi-PI were cast directly from 1.5% solutions onto the grid; no staining was necessary to achieve contrast. The specimen holder was then inserted into the straining stage of the KRATOS electron microscope at the National Center for Electron Microscopy. Micrographs were obtained at an accelerating voltage of 1.5 MeV and an elongation stretch rate of 0.11 μm/s. Real-time measurements were possible with the on-line video output.

Investigations also determined the effects of in-situ annealing both the PS-PB and PSi-PI block copolymers, achieved with the heating stage of a JEOL JEM 100CX electron microscope. Since low-voltage TEM was utilized, ultrathin films on the order of 30-40 nm were produced using a direct-casting procedure.[4] PS-PB copolymers were stained with the vapor of a 1% osmium tetroxide aqueous solution to enhance contrast between phases. The effects of temperature on these copolymers between 100° and 400° C were examined at an accelerating voltage of 80 kV, at intervals of 15 minutes.

Results

Typical undeformed PSi domains (having diameters between 10 and 25 nm) are

shown in Fig. 2a. After a straining time of approximately 8 min, the microstructures are deformed as in Fig. 2b. Some of these microstructures, seen in the lower part of the micrograph, exhibit a tensile strain of approximately 80%. Under prolonged deformation (about 21 min), the discrete domains yield to continuous striations, as seen in Fig. 2c. Similar striated features were found to be concentrated in the regions of some ultrathin films which showed other signs of internal stress (e.g., microtears approximately 10 nm wide).

The thermal studies reveal information on the evolution of microstructures under non-strain conditions. For example, Fig. 3 (324° C for 75 min) clearly shows a transition zone from a PS matrix (as cast) to a PB matrix, the latter normally prevailing in the bulk copolymer (70 wt% PB). Complete phase inversion of a sample such as this has been reported before, when the copolymer was annealed beyond the microphase-separation temperature (T_S) and studied with static TEM.[5] Thermal degradation was encountered at 400° C (60 min). In a PS-PB triblock copolymer with a higher PS fraction, lamellae naturally occur. In Fig. 4, the initial formation of these lamellae is observed. These bands, highlighted by superimposed diagonal lines, measure approximately 110 nm wide (except for one at 180 nm) and are separated by about 280 nm. The existence of these bands, which were completely reproducible, might be attributed to either Benard convection cells,[6] for which the size scale seems incorrect, or to spinodal decomposition.[7] Thermal degradation was observed once again at 400° C (30 min). The PSi-PI copolymer exhibited thermal instability at 324° C (75 min), which has been substantiated by others using thermogravimetric analysis.[8]

Conclusions

Methods for monitoring the dynamic response of block copolymer microstructures to temperature changes and strain have been presented.

Observation of boundary deformation should ultimately by useful in explaining the mechanical properties of block copolymers. In addition, thermal effects can provide insight into polymeric phase transformations and microstructural development.

References

1. R. J. Spontak et al., "The interphase composition profile in SB/SBS block copolymers, measured with electron microscopy, and microstructural implications," submitted to Macromolecules/1987.

2. S. L. Wunder et al., "Rheology of phase separation in anisotropic melt copolymers," Macromolecules/1986 19, 1696-1702.

3. J. H. Magill and Christian Riekel, "A phase transition study in poly[bis(p-methylphenoxy)phosphazene] using synchrotron radiation," Makromol. Chem., Rapid Commun./1986 7, 287-294.

4. Spontak, R.J., "Direct casting of SBS block copolymers on supported grids for TEM study," in G. W. Bailey, Ed., Proc., Electron Microscopy Society of America, San Francisco, CA: San Francisco Press, Inc., 1986, 788-789.

5. D. F. Leary and M. C. Williams, "Statistical thermodynamics of ABA block copolymers. II," J. Polym. Sci., Polym. Phys. Ed./1973 11, 345-358.

6. W. R. Krigbaum et al., "Some comments on domain structures in block copolymers," J. Polym. Sci., Polym. Phys. Ed./1973 11, 511-527.

7. Artur Baumgartner and D. W. Heermann, "Spinodal decomposition of polymer films," Polymer/1986 27, 1777-1780.

8. C. A. Arnold et al., "Structure property behavior of polyimide siloxane segmented copolymers," Proc., Society for Advancement of Materials and Process Engineering, April 1987.

Figure Captions

FIG. 1.--Schematic representation of the sample straining holder designed for in-situ tensile deformation in the KRATOS 1.5 MeV electron microscope.

FIG. 2.--Real-time deformation of PSi spherical domains at (a) t = 0 min, (b) t $\approx$ 8 min, and (c) t $\approx$ 21 min. Arrow indicates strain axis. Bar = 30 nm.

FIG. 3.--Phase inversion observed in PS-PB triblock copolymer at 324° C (75 min). Bar = 200 nm.

FIG. 4.--Bands displaying initial formation of lamellae in PS-PB triblock copolymer. Bar = 200 nm.

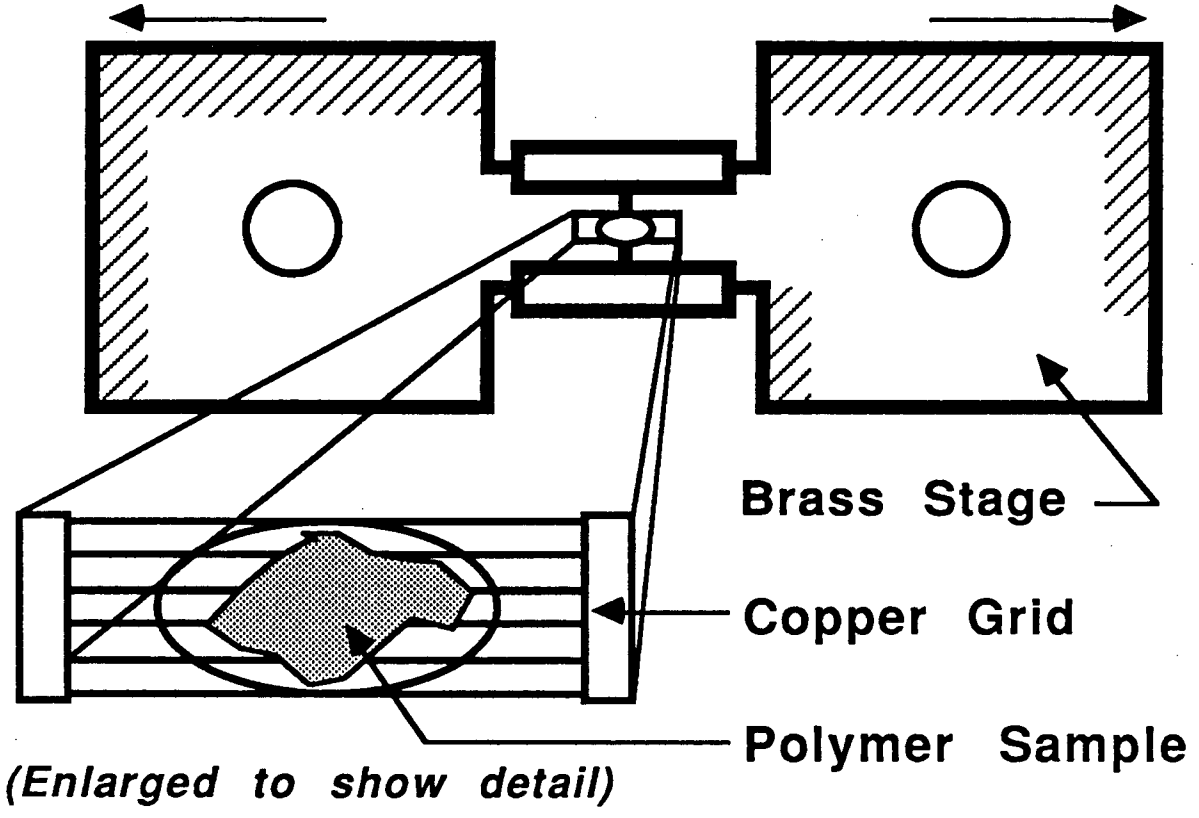

XBL 871-365

Fig. 1

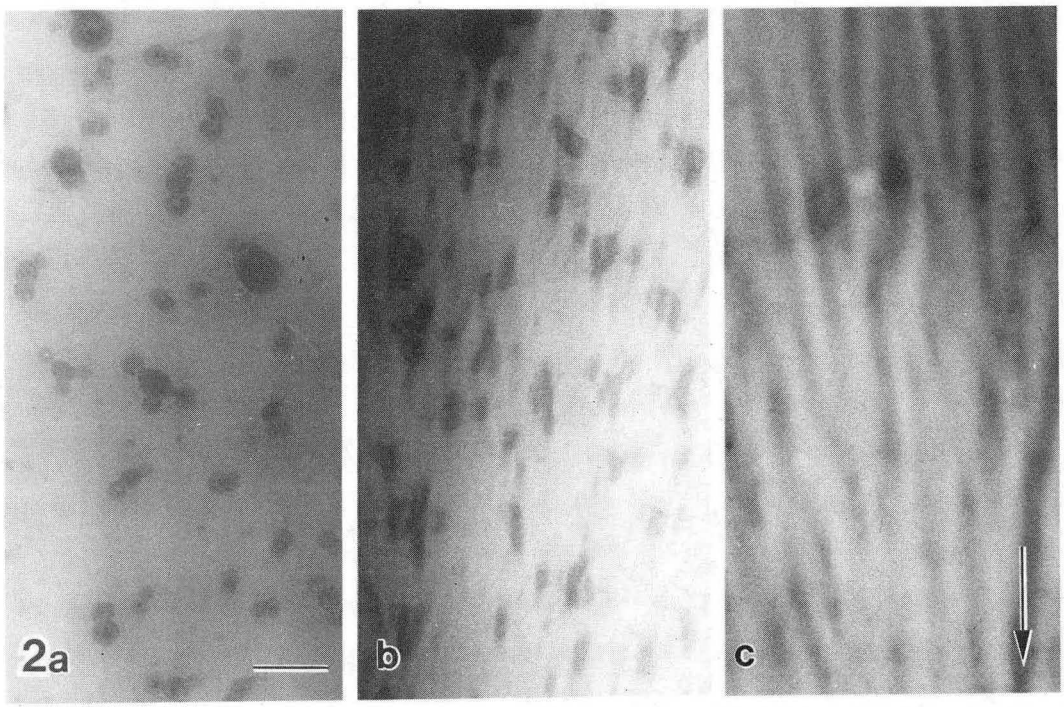

XBB 872-1038

Fig. 2

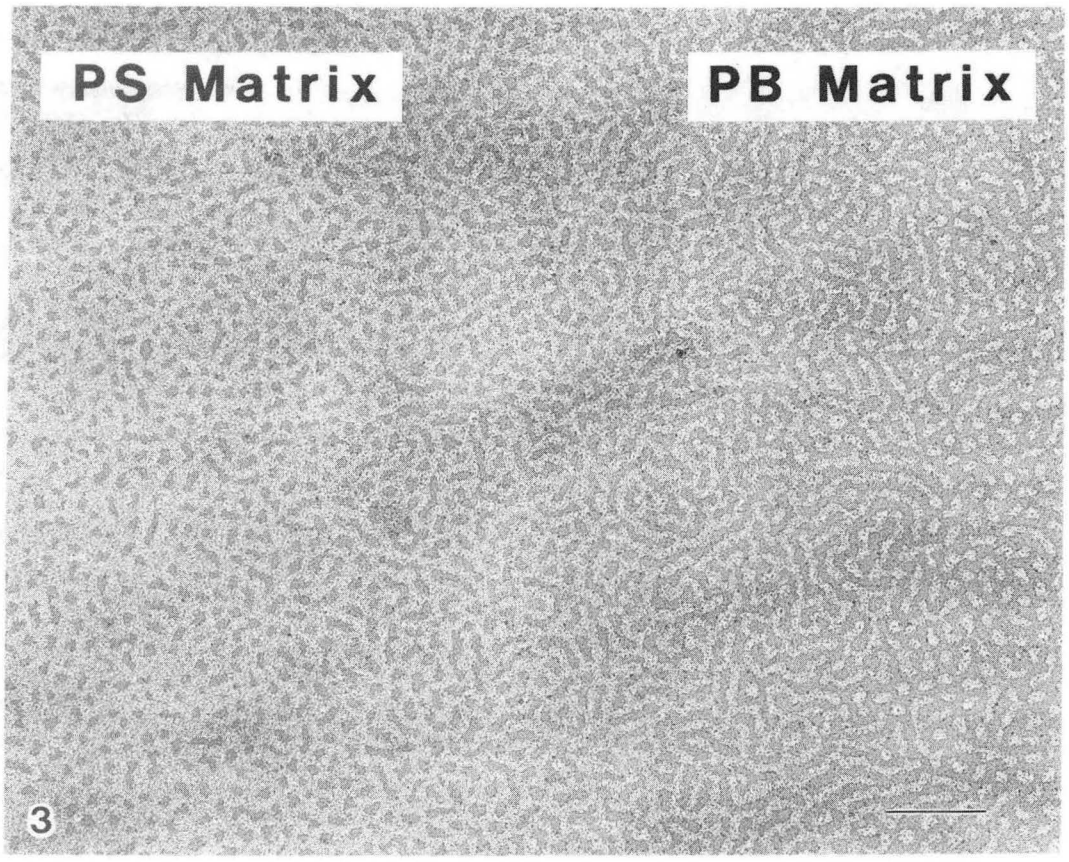

XBB 872-1039

Fig. 3

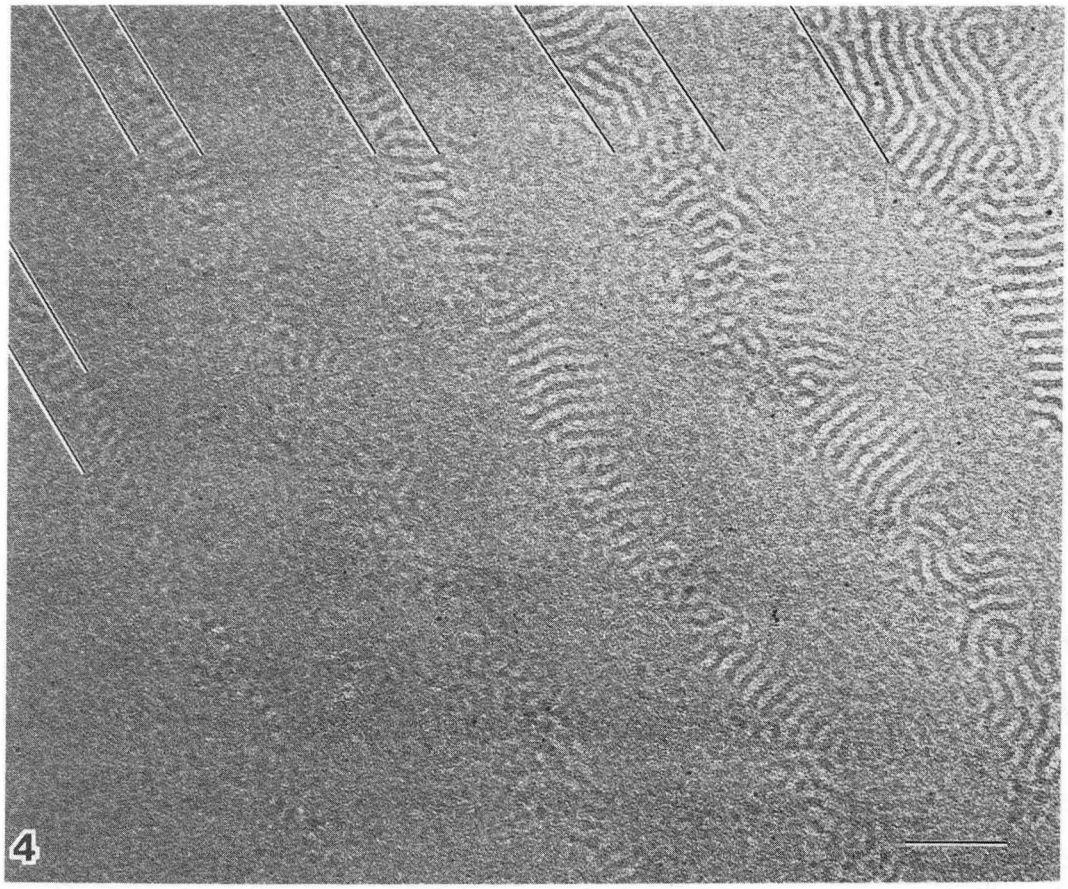

XBB 872-1040

Fig. 4

This report was done with support from the Department of Energy. Any conclusions or opinions expressed in this report represent solely those of the author(s) and not necessarily those of The Regents of the University of California, the Lawrence Berkeley Laboratory or the Department of Energy.

Reference to a company or product name does not imply approval or recommendation of the product by the University of California or the U.S. Department of Energy to the exclusion of others that may be suitable.

LAWRENCE BERKELEY LABORATORY
TECHNICAL INFORMATION DEPARTMENT
UNIVERSITY OF CALIFORNIA
BERKELEY, CALIFORNIA 94720