LBL-23103 c.2

Lawrence Berkeley Laboratory
UNIVERSITY OF CALIFORNIA

Engineering Division

RECEIVED
LAWRENCE
BERKELEY LABORATORY

NOV 20 1987

LIBRARY AND
DOCUMENTS SECTION

Presented at the Tenth International
Conference on Magnetic Technology,
Boston, MA, September 21–25, 1987,
and to be published in the Proceedings

Experience with Measuring Magnetic Moments of Permanent Magnet Blocks at Lawrence Berkeley Laboratory

D.H. Nelson, P.J. Barale,
M.I. Green, and D.A. Van Dyke

September 1987

TWO-WEEK LOAN COPY
This is a Library Circulating Copy
which may be borrowed for two weeks.

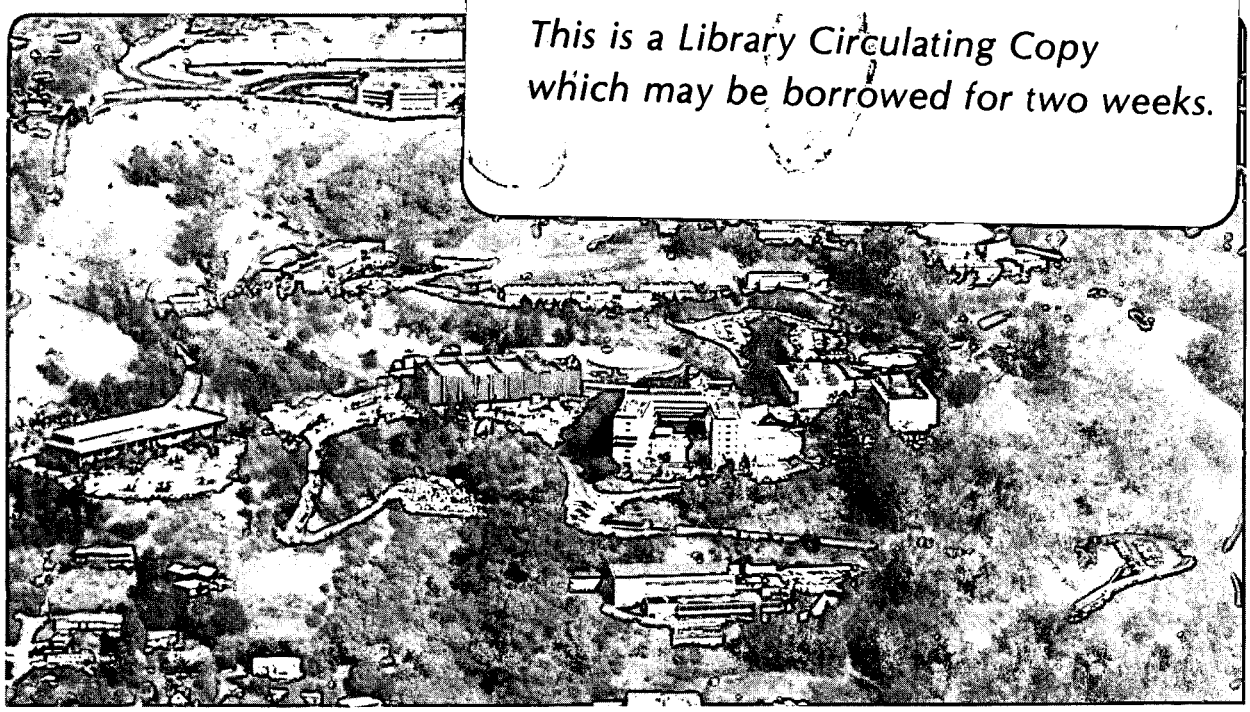

LBL-23103 c.2

Prepared for the U.S. Department of Energy under Contract DE-AC03-76SF00098

DISCLAIMER

This document was prepared as an account of work sponsored by the United States Government. While this document is believed to contain correct information, neither the United States Government nor any agency thereof, nor the Regents of the University of California, nor any of their employees, makes any warranty, express or implied, or assumes any legal responsibility for the accuracy, completeness, or usefulness of any information, apparatus, product, or process disclosed, or represents that its use would not infringe privately owned rights. Reference herein to any specific commercial product, process, or service by its trade name, trademark, manufacturer, or otherwise, does not necessarily constitute or imply its endorsement, recommendation, or favoring by the United States Government or any agency thereof, or the Regents of the University of California. The views and opinions of authors expressed herein do not necessarily state or reflect those of the United States Government or any agency thereof or the Regents of the University of California.

LBL-23103

Presented at the Tenth
International Conference
on Magnetic Technology,
Boston, MA, Sept. 23-26, 1987

EXPERIENCE WITH MEASURING MAGNETIC MOMENTS OF PERMANENT MAGNET BLOCKS AT LAWRENCE BERKELEY LABORATORY

D.H. Nelson, P.J. Barale, M.I. Green, and D.A. Van Dyke

Magnetic Measurements Engineering Group
Lawrence Berkeley Laboratory
University of California
Berkeley, CA 94720

September 1987

This work was supported by the Director, Office of Energy Research, Office of High Energy and Nuclear Physics, High Energy Physics Division, U. S. Dept. of Energy, under Contract No. DE-AC03-76SF00098.

EXPERIENCE WITH MEASURING MAGNETIC MOMENTS OF PERMANENT MAGNET BLOCKS AT LAWRENCE BERKELEY LABORATORY*

D.H. Nelson, P.J. Barale, M.I. Green, and D.A. Van Dyke
Magnetic Measurements Engineering Group
Lawrence Berkeley Laboratory
University of California
Berkeley, CA 94720

Abstract: Since May 1985, The Magnetic Measurements Engineering Group at LBL has measured and sorted a total of 3834 permanent magnet blocks. These magnetic blocks have been used in the construction of various successful beam-line elements including dipoles, quadrupoles, and wigglers. We report on observed variations in magnetic moments among blocks supplied by five manufacturers, describe the operational capabilities (accuracy, precision, and resolution) of the LBL Magnetic-moment Measurement and Sorting System (MMSS), cite the results of comparative calibrations by permanent-magnet manufacturers and other National Laboratories, and suggest criteria for automating the MMSS for measuring the large number of permanent-magnet blocks required for the insertion devices for the projected LBL 1-2 GeV Synchrotron Radiation Source.

Introduction

Since May 1985, the Magnetic Measurements Engineering (MME) Group at the Lawrence Berkeley Laboratory (LBL) has measured and sorted a total of 3834 permanent magnet blocks. These blocks have been used in the construction of 29 beam-line elements for 5 different projects--8 dipoles, 19 quadrupoles, and 2 wigglers.

We hope to automate the MME Magnetic-moment Measurement and Sorting System (MMSS) for the anticipated measurements of the permanent magnets to be incorporated in the 1-2 GeV Synchrotron Radiation Source planned for LBL. We present a plan to automate the MMSS to measure the principal component of magnetic moment. Existing tested technology, hardware, and software will be used (for the most part).

The decision to automate first-order rotational-error corrections depends on a study of the costs of automating a second axis of rotation vs. manually positioning some or all of the blocks. (Any measurement of first-order rotational-error corrections also provides a measurement of a second component.) The decision to measure a third component depends on the specifications of the insertion-device designers.

In addition to announcing our intention to automate the MMSS, we summarize our experience with the original configuration. We identify beam-line elements built from permanent magnets measured by the MMSS. We summarize variations among blocks provided by five vendors. We tabulate zero-resolution and position-sensitivity test results. And, finally, we discuss independent measurements of magnetic-moment components by one vendor.

Automating the MMSS

In 1985 Don Nelson and Derek Shuman made a cursory investigation of the number of magnetic blocks that would make automation of the MMSS cost effective and concluded that the "break-even" number would be between one thousand and ten thousand. Since the conceptual design of the 1-2 GeV Synchrotron Radiation Source[1] indicates that more than 13,000 "NdFe" blocks will be required for insertion devices U20.0, U9.0, U5.0, U3.65, and W13.6, we conclude that some automation is justified, and a serious investigation of the extent of automation is warranted.

Figure 1 shows the Helmholtz-coil pair and a coordinate system we have used for manually measuring magnetic moments at LBL.[2] Although we developed a satisfactory procedure for measuring, sorting, and documenting large numbers of magnetic blocks, we intend to initiate the first stage of automation for our next MMSS application.

The Helmholtz coil-pair shown in Fig. 1 will detect changes in flux-linkage. Figure 2 is a block diagram of test equipment that will automatically measure and record the detected flux-linkage as a function of rotation about the y-axis. Most of the hardware used for manual operation of the MMSS may be reused for the automated version. Most of the additional hardware has been purchased but has not been interfaced to the MMSS. Existing software will be revised to rotate the magnetic block about the y-axis and collect and Fourier analyze magnetic flux-linkage as a function of the magnetic block's azimuthal position.

Fourier analysis of data collected as the block is rotated 360° about the y-axis will be used to determine the amplitude of the magnetic moment in the x-z

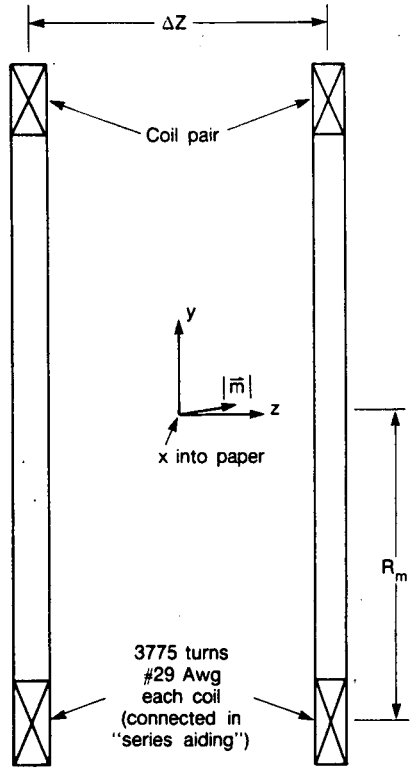

Fig. 1. A magnetic dipole ($\vec{m}$) at the origin of a cartesian coordinate system centered on a Helmholtz coil pair; the axial separation (Δz) equals the mean radius of the coil bundle (R_m).

*This work was supported by the Director, Office of Energy Research, Office of High Energy and Nuclear Physics, High Energy Physics Division, U.S. Dept. of Energy, under Contract No. DE-AC03-76SF00098.

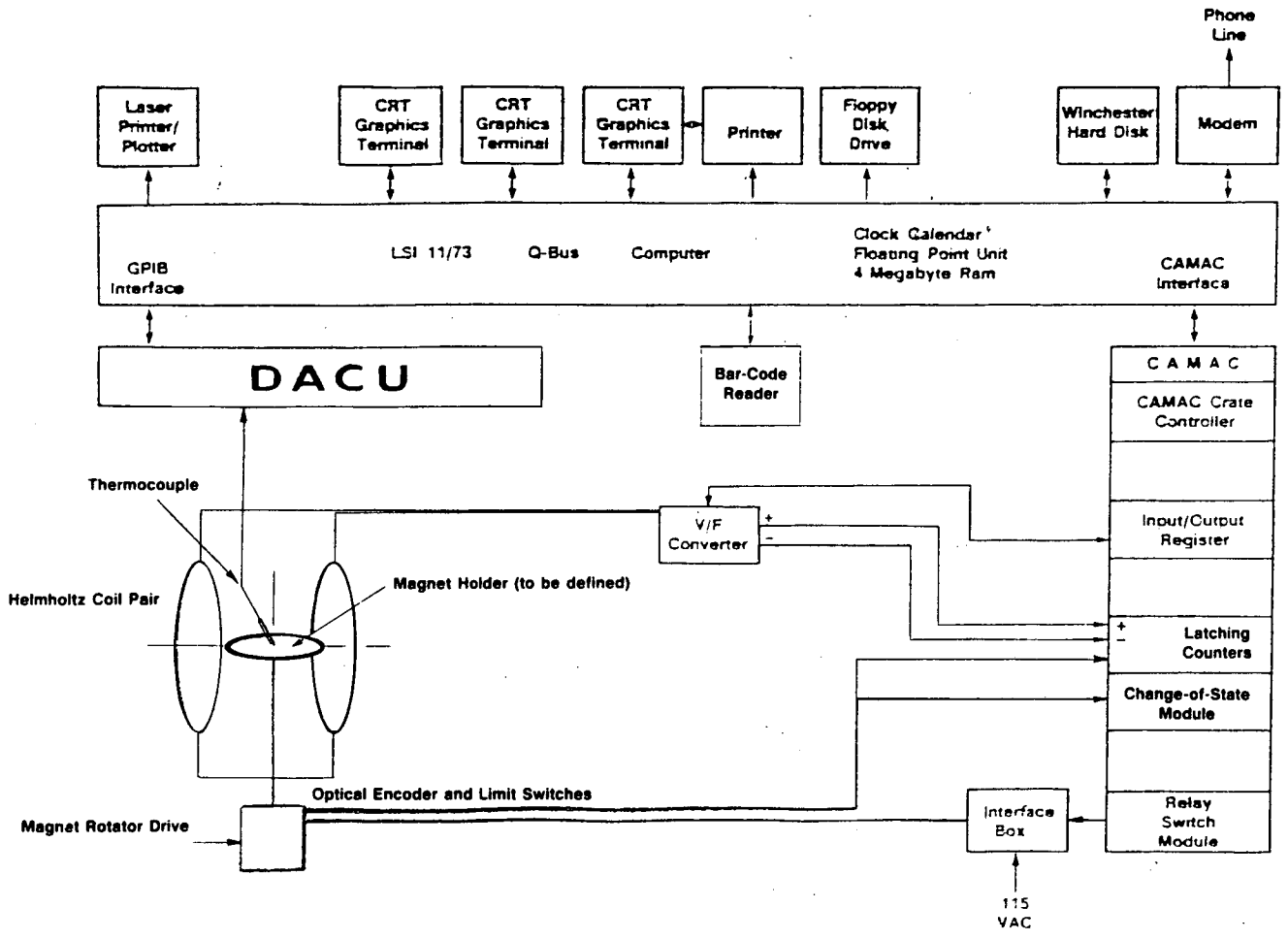

Fig. 2. Block diagram of the automated Magnetic-moment Measurement and Sorting System.

plane. If the orientation of the magnet under test, with respect to the z-axis, were determined, the "real" and "quadrature" parts of the "fundamental" would reveal two components of magnetic moment. Flipping the magnet (a 180° rotation about its nominal "easy axis"), followed by acquiring another data set as a function of rotation about the y-axis, could be used either to determine the orientation of its moment with respect to the z-axis or to determine directly the magnitude of the real and quadrature components of magnetic moment in the x-z plane. (The easy axis is defined as the direction of a block's magnetic moment.)

Reorienting the magnet (±90° rotations about its nominal easy axis) along with acquiring appropriate additional data sets could be used to provide another determination of the principal component of magnetic moment plus a determination of the minor component on the third axis. The decision to automate rotation about the z-axis requires additional study.

One advantage of introducing Fourier analysis of the moment data is that it could provide a means for determining higher-order multipoles. According to one source[3] the higher-order moments of B_r are significant in the design of permanent-magnet beam-line elements [those not ferromagnetic (iron) dominated].

Measured Variations among Magnetic Blocks Used in Beam-Line Elements

Table I lists the beam-line elements that have been fabricated with permanent magnets measured with the LBL MMSS and summarizes the measured variations among magnetic blocks from five manufacturers. To minimize the effects of these inherent variations, several selection processes have been devised to optimize the quality of the beam-line element under construction.[12,13]

Results of Reproducibility, Zero Resolution, and Position Sensitivity Tests

Early in our operation of the MMSS we determined its zero resolution (the noise level of a measurement sequence without a magnet) and reproducibility, the effects of translational errors along the x-, y-, and z-axes, and the effects of rotational errors about the principal axes. The zero-resolution tests were made without a magnet in the positioning fixture. The reproducibility tests were conducted with two magnets with their easy axes normal to one another. For each test we measured three components of magnetic-moment. Results of these tests are summarized in Table II.

Uncertainty in our determination of any component of magnetic moment was 30×10^{-10} Wbm; our angular uncertainty (limited by magnet dimensional tolerances) was 5 mrad.

Comparative Calibrations

We have begun the process of comparing LBL magnetic-moment calibrations with those of manufacturers and other National Laboratories. Three magnetic blocks supplied by three vendors and measured with the MMSS are being circulated to interested organizations. We can report on the results of extensive tests by one manufacturer. This company estimates its systematic errors at 1.2%, whereas we estimate the LBL systematic errors at 0.5%. The LBL determinations of the easy-axis components of the three "test" blocks were sys-

TABLE I. SUMMARY OF PERMANENT-MAGNET DATA USED IN THE CONSTRUCTION OF 29 BEAM-LINE ELEMENTS.

Project	Beam-Line Element	No. of Elements (or Per.)	No. of Blocks/ Element (or Per.)	Status	Total No. of Tested Magnets	Moment/ Volume (m/Vol.) [T]	Standard Deviations [%(m/Vol.)] x' (Easy) Axis	y' Axis	z' Axis	Material
ATA beam Director [Ref. 4]	Dipole	8	16	Constructed & Tested	144	0.351	1.20	n.a.	n.a.	Ferrite
	Quadrupole	3	16		80	0.342	1.40	n.a.	n.a.	Ferrite
	Quadrupole	4	16		96	0.344	0.87	n.a.	n.a.	Ferrite
	Quadrupole	2	16		47	0.343	0.73	n.a.	n.a.	Ferrite
Paladin Free-Electron Laser Wiggler [Refs. 5-8]	Wiggler	(320)	(8)	60% Constructed & Tested	100	0.977	n.a.	n.a.	n.a.	Sm_2Co_{17}
					713	0.981	1.03	0.00	0.45	Sm_2Co_{17}
					903	0.974	1.06	0.00	1.19	Sm_2Co_{17}
Hilac Adj. Rare Earth Drift Tube [Ref. 9]	Adjustable Quadrupole	1		Harmonic Analyzed						
	Rotor 1		24		30	0.932	0.65	0.64	1.03	$SmCo_5$
	Rotor 2		24		30	0.936	0.55	0.90	0.89	$SmCo_5$
	Stator		16		20	0.924	0.26	1.13	0.74	$SmCo_5$
LBL/LLNL/SSRL Beam-Line X Wiggler [Ref. 10]	Wiggler	(16)	(64)	Operational	1135	1.122	1.22	0.91	0.43	Neodymium Iron Boron
Heavy Ion Fusion [Ref. 11]	3 x 3 Quad	9	20	Harmonic Analyzed	266	1.079	0.22	0.14	0.49	Neodymium Iron Boron
					270	1.164	0.63	0.86	0.93	Neodymium Iron Boron
				Total	3834					

Note: n.a. = not available

TABLE II. RESULTS OF ZERO RESOLUTION, REPRODUCIBILITY, AND POSITION SENSITIVITY TESTS.

Error Test	Easy-Axis Moment (10^{-6} Wbm)	% Measured Error $\Delta m_{x'}$ (%1.2 x 10^{-6})	$\Delta m_{y'}$ (%1.2 x 10^{-6})	$\Delta m_{z'}$ (%1.2 x 10^{-6})
Zero Resolution (Std. Dev. of 16 measurements)	0	0.05<	0.05<	0.05<
Reproducibility (Std. Dev. of 10 measurements)	$m_{x'}$ = 1.186	0.16	0.02	0.06
Reproducibility (Std. Dev. of 10 measurements)	$m_{y'}$ = 1.189	0.05	0.08	0.05
Displacement in j	$m_{y'}$ = 1.189	$\Delta m_{x'}/\Delta j$ (%$m_{y'}$/cm)	$\Delta m_{y'}/\Delta j$ (%$m_{y'}$/cm)	$\Delta m_{z'}/\Delta j$ (%$m_{y'}$/cm)
Displacement in x (j=x)		0.01	0.02	0.00
Displacement in y (j=y)		0.01	0.00	-0.02
Displacement in z (j=z)		0.02	0.01	0.00
Rotation about j axis	$m_{y'}$ = 1.527	$\Delta m_{x'}/\Delta j$ (%$m_{y'}$/100 mrad)	$\Delta m_{y'}/\Delta j$ (%$m_{y'}$/100 mrad)	$\Delta m_{z'}/\Delta j$ (%$m_{y'}$/100 mrad)
j = x (pitch)		0.05<	-0.79	0.05<
j = y (yaw)		0.05<	-0.62	0.05<
j = z (roll)		0.05<	-0.05	0.05<

Notes: Primed coordinates are magnet coordinates (to differentiate from Helmholtz-Coil Coordinates); for the zero-resolution tests no magnet was used (m = 0), and errors are reported in %(1.2 x 10^{-6} Wbm); 0.05< means less than 0.05% of the quantities specified above.

tematically 0.6% lower than the average nominal easy-axis components (of magnetic moment) reported by this manufacturer. The correlation between the measurements, by LBL and by the manufacturer, of the moment directions of the three blocks is less than 1 mrad, even though dimensional tolerances limit our angular uncertainty to 5 mrad.

Discussion

We are convinced that limited automation of the MMSS and the introduction of Fourier analysis of magnetic-moment data will be cost effective. However, to maximize the effectiveness of automating the MMSS we recommend that any additional tests or magnet modifications[14] be incorporated into the "measurement cycle" and that a detailed study be conducted of packaging the magnets, identifying data sets, and handling magnets before and after measuring magnetic moments. We offer a few suggestions to be executed by the manufacturer in close cooperation with LBL.

1. Develop a packaging technique that will minimize the effort required to install the magnet in the magnet holder and repackage it after measurement.
2. Identify each magnet with a bar code that would be read into the computer.
3. Place an arrow on each block to show the nominal direction of its magnetic moment and establish its unique, agreed-upon coordinate system. For example, if the arrow points in the +z' direction and is placed on the +x' face the +y' direction may be deduced from the right-hand rule associated with $\hat{x}' \times \hat{y}' = \hat{z}'$.

Acknowledgement

We wish to acknowledge the excellent support of the LBL Technical Information Department.

References

1. K. Halbach and E. Hoyer, "1–2 GeV Synchrotron Radiation Source Insertion Devices--Conceptual Design No. 1," LBL Mechanical Engineering Note NC3401, M6521, June 1986.
2. D.H. Nelson, P.J. Barale, M.I. Green, and D.A. VanDyke, "The Lawrence Berkeley Laboratory Magnetic-Moment Sorting System," in Proceedings of the 9th Intern. Conf. on Magnet Technology, Zurich, Switzerland, Sept. 9–13, 1985; Swiss Institute of Nuclear Research.
3. M. Baltay, B. Denton, and J. Spencer, R. Adler, H. Marik and W. Sattler, "Techniques for Making and Measuring Permanent Magnets," to be published.
4. D.H. Nelson and D.A. Van Dyke, "Summary of Measurements and Sorting of Permanent Magnets for the ATA Beam Director," LBL Electronics Engineering Note MT352 (LBID-1047), November 1985.
5. D.H. Nelson and D.A. Van Dyke "Summary of Measurements and Sorting of Sm_2CO_{17} (Rare-Earth Cobalt) Magnets for the Paladin Free Electron Laser," LBL Electronics Engineering Note MT 359 (LBID-1108), January, 1986.
6. D.H. Nelson and D.A. Van Dyke, "Summary of Measurements and Sorting of Sm_2CO_{17} (Second Lot) (Rare-Earth Cobalt) Magnets for the Paladin Free Electron Laser," LBL Electronics Engineering Note MT 367 (LBID-1160), May 1986.
7. D.H. Nelson, P.J. Barale, and D.A. Van Dyke, "Summary of Measurements and Sorting of Sm_2CO_{17} (Rare-Earth Cobalt) Magnets for the Paladin Free Electron Laser", LBL Electronics Engineering Note MT 368 (LBID-1182), July 1986.
8. D.H. Nelson and D.A. Van Dyke, "Summary of Measurements and Sorting of Sm_2CO_{17} (Fourth Lot) (Rare-Earth Cobalt) Magnets for the Paladin Free Electron Laser," LBL Electronics Engineering Note MT 375 (LBID-1293), October 1987.
9. D.H. Nelson, D.B. Shuman, and D.A. Van Dyke, "HILAC Variable Hybrid Quadrupole Prototype: Results of Magnetic Moment Measurements," Electronics Engineering Note MT371 (LBID-1212), October 1986.
10. D.H. Nelson and D.A. Van Dyke, "Summary of Measurements and Sorting of Neodymium-Iron-Boron (Rare-Earth) Magnet Blocks for the LBL/LLNL/SSRL Beam-Line X Wiggler," LBL Electronics Engineering Note MT 369 (LBID-1192), January 1987.
11. D.H. Nelson and D.A. Van Dyke, "Summary of Measurements and Sorting of Neodymium-Iron-Boron (Rare-Earth) Magnet Blocks for a Permanent Magnet Quadrupole Array (Group A Sumitomo Neomax - 30H) & (Group B. Vacuumschemelze Vacodym - 370), LBL Electronics Engineering Note MT 372 (LBID-1231), January 1987.
12. D. Shuman and J. Tanabe, "Block Sorting and Placement of $SmCO_5$ Blocks in SuperHILAC--Variable Hybrid Quadrupole Prototype Magnetic Structure, LBL Mechanical Engineering Note M6584, Oct. 1986.
13. G. Deis, LLNL, Private Communication, Sept. 1987.
14. K. Halbach, Private Communication, Aug. 1987.

LAWRENCE BERKELEY LABORATORY
TECHNICAL INFORMATION DEPARTMENT
UNIVERSITY OF CALIFORNIA
BERKELEY, CALIFORNIA 94720