LBL-23277
Preprint

Lawrence Berkeley Laboratory
UNIVERSITY OF CALIFORNIA

Materials & Chemical Sciences Division

NOV 20 1987
DOCUMENTS SECTION

Submitted to Review of Scientific Instruments

A Novel High Pressure Isolation Cell Capable of Reaching 120 atm Mounted in an Ultra-High Vacuum Chamber

T.G. Rucker, K. Franck, D. Colomb,
M.A. Logan, and G.A. Somorjai

March 1987

TWO-WEEK LOAN COPY
This is a Library Circulating Copy which may be borrowed for two weeks.

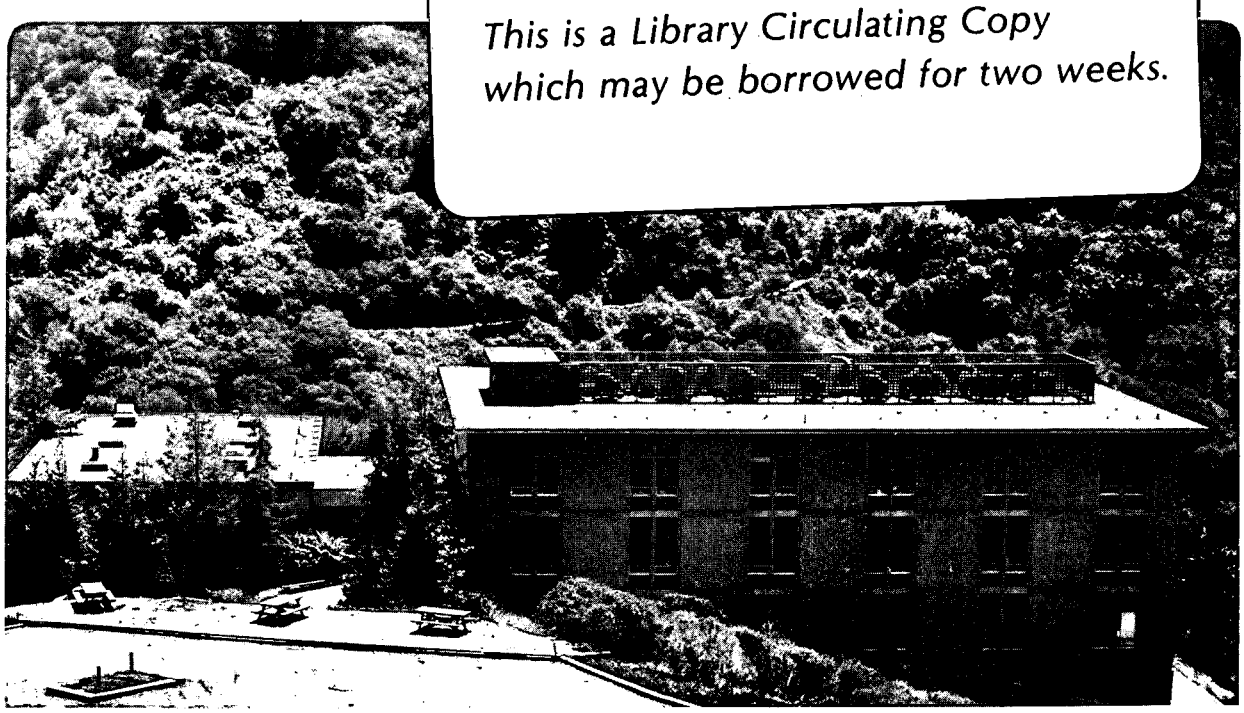

LBL-23277 c.2

Prepared for the U.S. Department of Energy under Contract DE-AC03-76SF00098

DISCLAIMER

This document was prepared as an account of work sponsored by the United States Government. While this document is believed to contain correct information, neither the United States Government nor any agency thereof, nor the Regents of the University of California, nor any of their employees, makes any warranty, express or implied, or assumes any legal responsibility for the accuracy, completeness, or usefulness of any information, apparatus, product, or process disclosed, or represents that its use would not infringe privately owned rights. Reference herein to any specific commercial product, process, or service by its trade name, trademark, manufacturer, or otherwise, does not necessarily constitute or imply its endorsement, recommendation, or favoring by the United States Government or any agency thereof, or the Regents of the University of California. The views and opinions of authors expressed herein do not necessarily state or reflect those of the United States Government or any agency thereof or the Regents of the University of California.

A Novel High Pressure Isolation Cell Capable of Reaching 120 atm Mounted in an Ultra-High Vacuum Chamber

T.G. Rucker, K. Franck, D. Colomb , M.A. Logan and G.A. Somorjai

Department of Chemistry
University of California, Berkeley
and
Materials and Chemical Sciences Division
Lawrence Berkeley Laboratory
Berkeley, CA 94720

Abstract

A high pressure cell and manipulator mounted inside a UHV surface analysis chamber has been built which can reach 1800 psi. With this apparatus, catalytic reactions on small surface area ($\sim$1 cm^2) single crystals and polycrystalline surfaces are monitored, and the effect of reactant pressure, surface composition and surface structure are correlated with catalytic activity. This paper describes in detail the apparatus and typical experimental procedure.

INTRODUCTION

This paper reports on the design of a new high pressure isolation cell mounted inside an ultra-high vacuum (UHV) chamber capable of attaining pressures of 1800 psi (122 atm). This pressure range allows modeling of many industrially important reactions, including CO hydrogenation, ammonia synthesis and hydrocarbon reforming.

Work in our laboratory has centered on studying catalytic reactions on well characterized low surface area (1 cm^2) transition metal single crystal and polycrystalline surfaces to correlate surface composition and structure (determined in UHV) to catalytic behavior (high pressure conditions).[1] Previous experiments were performed in chambers equipped with high pressure cells capable of attaining only 350 psi. In these systems, all of the features of UHV surface science chambers (AES, LEED, XPS, TPD, ion bombardment gun, evaporation sources) are combined with a high pressure batch reactor.[2,3] With this configuration the catalyst surface is fully characterized before and after a reaction without exposing the sample to the ambient atmosphere.

Many commercial reactions are operated at pressures over 500 psi. Thermodynamics dictates that product formation for some reactions is enhanced at higher pressures. Also, at higher pressures, different mechanisms may exist which lead to different product distributions than at lower pressures because of larger surface concentrations of weakly adsorbed molecules. In ammonia synthesis higher conversions are obtained by performing the reaction at higher pressures (>1500 psi). In the Fischer-Tropsch (Syn Gas) reaction recent studies in our laboratory found a significant increase (from 65% to 90%) in the alcohol selectivity of K_2CO_3 promoted MoS_2 in a pressure range of 500 to 1500 psi H_2 with a constant CO pressure of 500 psi.[4] This new system we describe provides a means to model reactions at high pressure.

The major limitation in reaching high pressures in the previous isolation cells was the manipulator-to-cell sealing surface. The copper gasket-knife edge seal fails above 350 psi of reactant gas. This new apparatus uses a sealing surface with differentially pumped o-rings, which is tight to over 1800 psi of reactant gas. Other improvements in design include

smaller cell volume, easier manipulator-cell alignment, and a simplified sealing mechanism.

DESIGN CRITERIA

Various constraints are imposed on the design of the high pressure cell and the manipulator. The cell should have a seal capable of maintaining UHV in the chamber during reactions with 10^5 torr of reactants. After a reaction, the cell should pump down rapidly (within minutes) to UHV. The total unit has to fit comfortably inside a 10 liter UHV chamber and also allow use of all of the surface science equipment (x-ray and electron sources, electron energy analyzer and mass spectrometer). The volume of the cell has to be minimized for two reasons. First, since the catalyst surface area is $\sim$1 cm^2, the sample surface area/cell volume ratio has to be maximized to enhance detectability of reaction products. Second, during reactions products and reactants adsorb on the walls of the cell and slowly outgas when the cell is opened to UHV, increasing the chamber base pressure. The sample should be easily mountable on the manipulator to facilitate sample changes. The cell and sample support must be catalytically inactive at the reaction temperatures to which they are exposed.

HIGH PRESSURE SYSTEM

A schematic of the high pressure/UHV system is shown in Figure 1. The primary components are the manipulator (to which the sample is attached), the high pressure cell mounted inside the UHV chamber, a gas circulation pump and gas chromatograph for reaction product analysis. The components of the high pressure system (manipulator and cell) are described below in detail.

a) MANIPULATOR

The manipulator shown in Figure 2 is composed of two sections: a solid stainless steel (s.st.) bulkhead with thermocouple and electrical feedthroughs to which the sample is attached and a 1m long s.st. transfer probe. This unit has both vertical and 360° rotational motion with the sample mounted on the central chamber axis.

The manipulator is raised and lowered with a vertical translator mounted on the chamber. To prevent exposure of the chamber to atmosphere during sample changes a load lock

is mounted on the chamber (Fig. 1). The seal between the manipulator and chamber, located above the load lock gate valve, consists of two differentially pumped piston seals which are very lightly lubricated with diffusion pump oil to allow the manipulator to slide easily.

The bulkhead has two 150 amp copper feedthroughs and two thermocouple feedthroughs welded in with the ceramic insulator inside the cell. The sample is spotwelded to 20 mil gold wire which in turn is spotwelded to the copper feedthroughs. On the topside of the electrical feedthroughs copper tubes were soldered on which carry in liquid nitrogen for cooling and current for sample heating. The tubes and thermocouple wires run the length of the 2.5′ diameter polished transfer probe welded to the bulkhead. The other end of the probe is capped to allow evacuation of the transfer probe to cool samples without condensation on the outside of the probe. The copper tubes and thermocouple have vacuum tight connections through this cap.

b) CELL

The manipulator is lowered and inserted into the high pressure cell (Fig. 3) to complete a micro-batch reactor. This cell (18 cm × 7.5 cm), mounted inside the chamber on the bottom center, has a piston-actuated seal which grasps the manipulator in a bayonet mount. The sealing surface of the cell consists of two differentially pumped viton o-rings seated in dove-tail grooves on the top flat surface. Pressurizing the piston through the air-in line pulls down the outer housing which in turn pulls the manipulator's flat sealing surface tightly against the o-rings. A nitrogen sealing pressure of at least one-half the reaction gas pressure is needed for a tight seal. When the nitrogen pressure is released, the spring forces the piston and outer housing up.

The inner cell is mounted on a 1 cm diameter pedestal which holds the cell firmly while still allowing 1-2 mm lateral flexibility for manipulator-cell alignment.The cell has cavities for the sample (9 cm × 2.5 cm) and piston (6 cm × 5 cm). This cell has connections for reactant gas in and out, nitrogen for pressurizing the piston, and for differential pumping between the o-rings and the volume below the piston. The volume under the piston is

pumped as an extra precaution to eliminate the possibility of nitrogen leaking into the chamber during a reaction.

EXPERIMENTAL PROCEDURE

In a typical reaction study, the $\sim 1\ cm^2$ catalyst sample is cleaned and characterized by AES, LEED and XPS. The manipulator is lowered and then rotated 45° to latch it into the high pressure cell. After the manipulator and cell are tightly sealed, by pressurizing the piston (500 psi N_2) and thereby activating the clamping mechanism, the differential pumping between the o-rings is started. At this point valves 1 & 2 (Fig. 1) are opened to complete the micro-batch reactor (total volume 103 cm^3). The unit is filled with the desired amount of reactant gases (up to 1800 psi) which are circulated by a positive displacement circulation pump. The sample is then resistively heated and the product yield and distribution monitored with a gas chromatograph. At reaction pressures over 20 atm, sample heating becomes difficult due to heat conduction by the gases. Depending on the sample and reactant gases 80 – 90 amps maybe necessary to heat the 1 cm^2 sample to 400°. After the reaction, the unit is evacuated with a mechanical pump and oil-diffusion pump to $\sim 1 \times 10^{-6}$ torr. The differential pumping is stopped and the cell is isolated from the rest of the loop by closing valves 1 and 2. After releasing the piston pressure and rotating the manipulator 45° it is raised to align the sample with the UHV surface analytical tools and fully characterized.

SUMMARY

A high pressure cell and manipulator mounted inside a UHV surface analysis chamber has been built which can reach 1800 psi while the chamber base pressure remains at 1×10^{-9} torr. With this apparatus, catalytic reactions on small surface area ($\sim 1\ cm^2$) single crystals and polycrystalline surfaces are monitored, and the effect of reactant pressure, surface composition and surface structure are correlated with catalytic activity. A model catalyst can easily be characterized, enclosed in a micro-batch reactor; a reaction can be run (10 min – 24+ hours) and the sample quickly (10-15 minutes) returned to the UHV environment without exposing it to the ambient atmosphere.

ACKNOWLEDGEMENTS

This work was supported by the Director, Office of Energy Research, Office of Basic Energy Sciences, Chemical Sciences Division of the U.S. Department of Energy, under Contract DE–AC03–76SF00098.

REFERENCES

1.a. T.G.Rucker, M.A.Logan, T.M.Gentle, E.L.Muetterties and G.A.Somorjai, *J. Phy. Chem*,**90**, 2703 (1986)

b. M.A.Logan, T.G.Rucker, T.M.Gentle, E.L.Muetterties and G.A.Somorjai, *J. Phy. Chem*,**90**, 2709 (1986)

2. D.W.Blakely, E.I.Kozak, B.A.Sexton and G.A.Somorjai,*J. Vac. Sci. Tech.*, **13**, 1091, (1976)

3. A.L.Cabrera, N.D.Spencer, E.Kozak, P.W.Davies and G.A.Somorjai, *Rev. Sci. Instrum.*, **53**, 1889 (1982)

4. X.Youchang, B.M.Naasz and G.A.Somorjai,*App. Catal.*, **27**, 233 (1986)

Figure Captions

Figure 1. A schematic of the Ultra-high vacuum surface science chamber with the new high pressure manipulator and cell is shown. The manipulator can be raised to allign the sample with the surface analytical techniques (AES, TPD, XPS) or lowered into the cell mounted on the bottom of the chamber to enclose the sample in a microbatch reactor. The reaction loop has a circulation pump, gas chromatograph and gas manifold.

Figure 2. The manipulator is composed of a solid stainless steel bulkhead with thermocouple and electrical feedthroughs to which the sample is attached, and a 1m long transfer probe. The sample can be cooled to 85K and heated to over 1300 K.

Figure 3. This figure shows a cross sectional view of the high pressure cell mounted on the bottom of the chamber. The cell has a piston-actuated seal which grasps the manipulator in a bayonet mount. Pressurizing the piston through the air-in line pulls down the outer housing which in turn pulls the manipulator's flat sealing surface tightly against the o-rings.

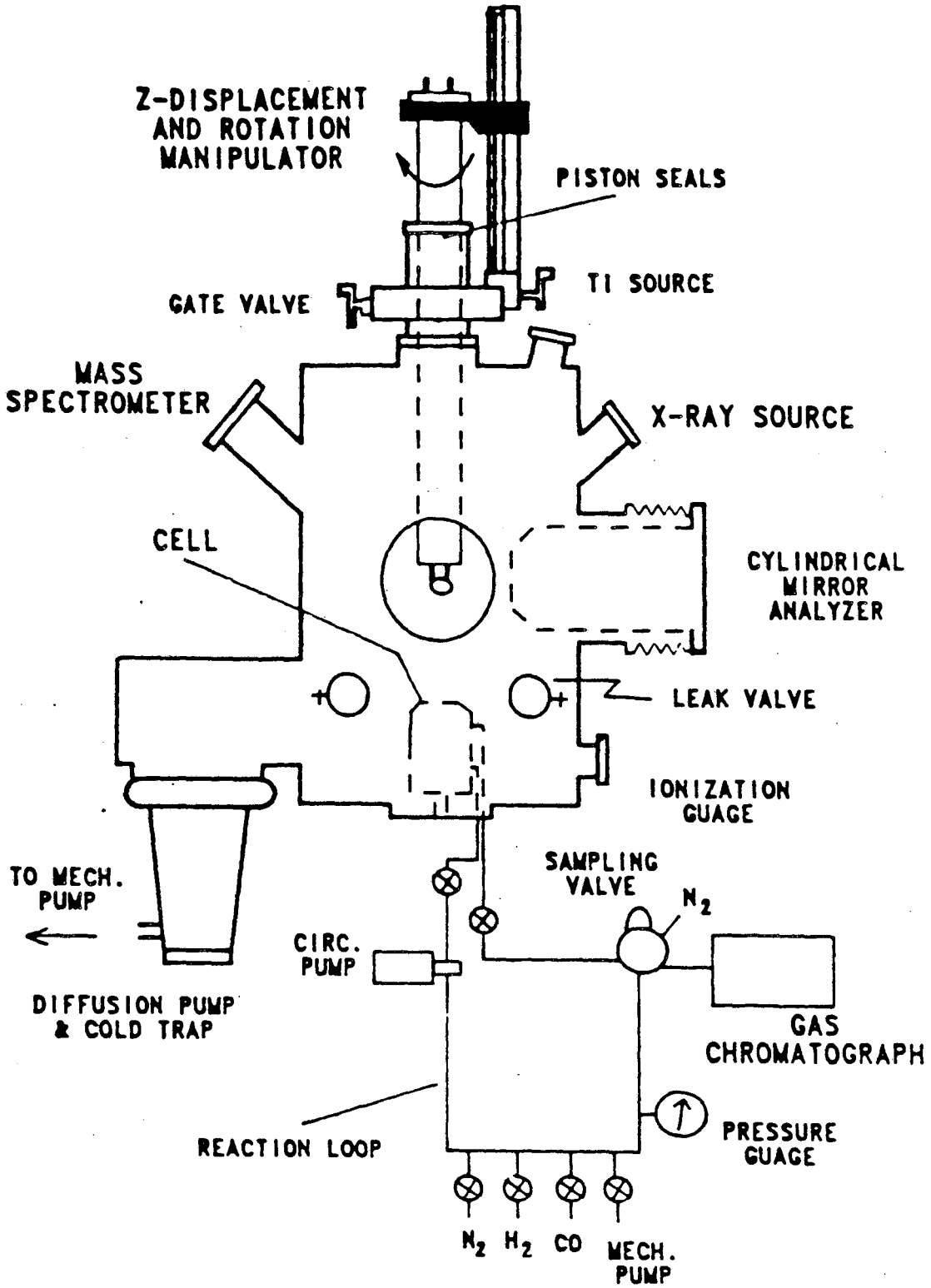
Z-DISPLACEMENT AND ROTATION MANIPULATOR
PISTON SEALS
TI SOURCE
GATE VALVE
MASS SPECTROMETER
X-RAY SOURCE
CELL
CYLINDRICAL MIRROR ANALYZER
LEAK VALVE
IONIZATION GUAGE
SAMPLING VALVE
N_2
TO MECH. PUMP
CIRC. PUMP
DIFFUSION PUMP & COLD TRAP
GAS CHROMATOGRAPH
REACTION LOOP
PRESSURE GUAGE
N_2 H_2 CO MECH. PUMP

XBL 871-368

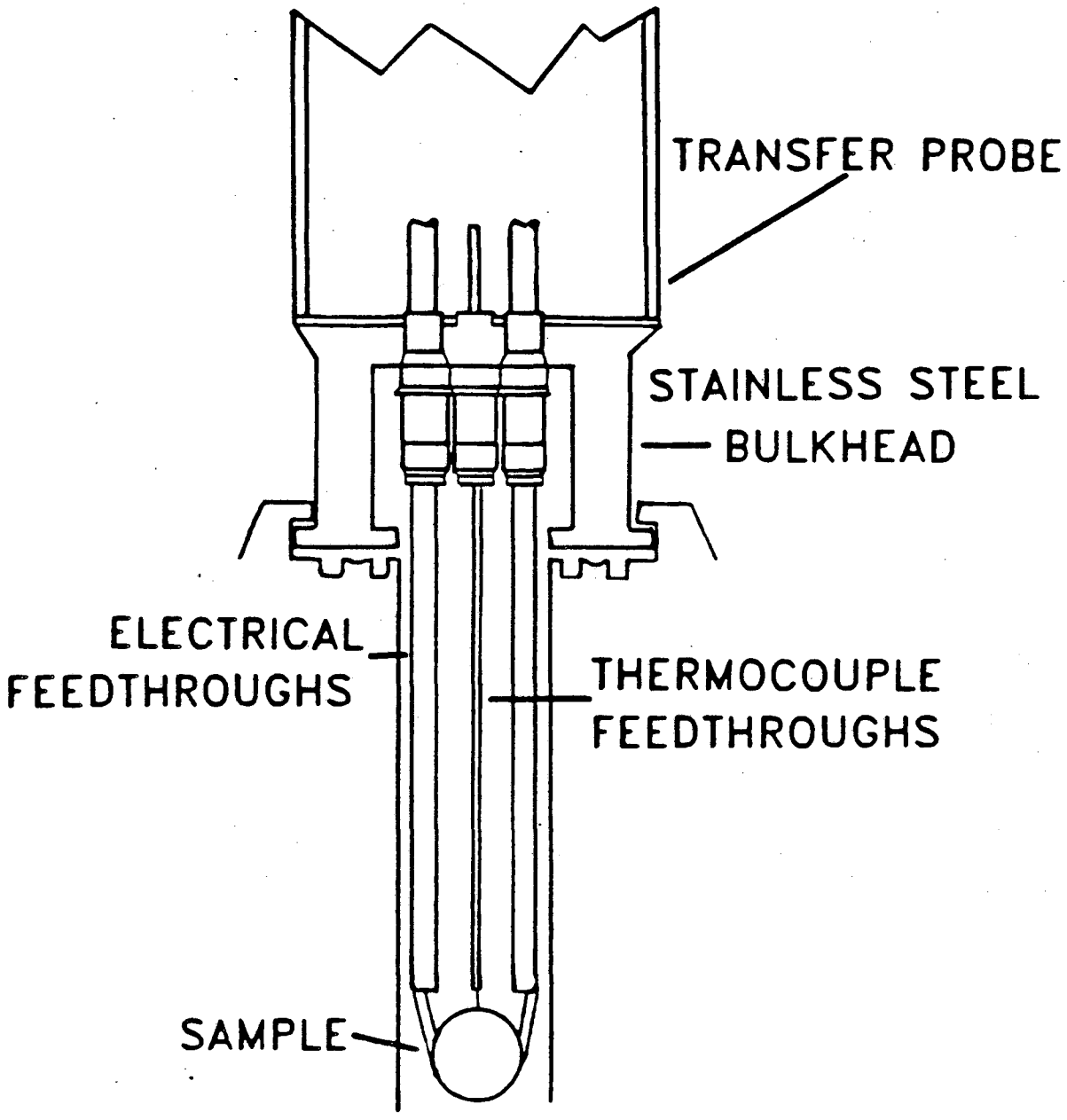
TRANSFER PROBE
STAINLESS STEEL
BULKHEAD
ELECTRICAL
FEEDTHROUGHS
THERMOCOUPLE
FEEDTHROUGHS
SAMPLE

XBL 871-366

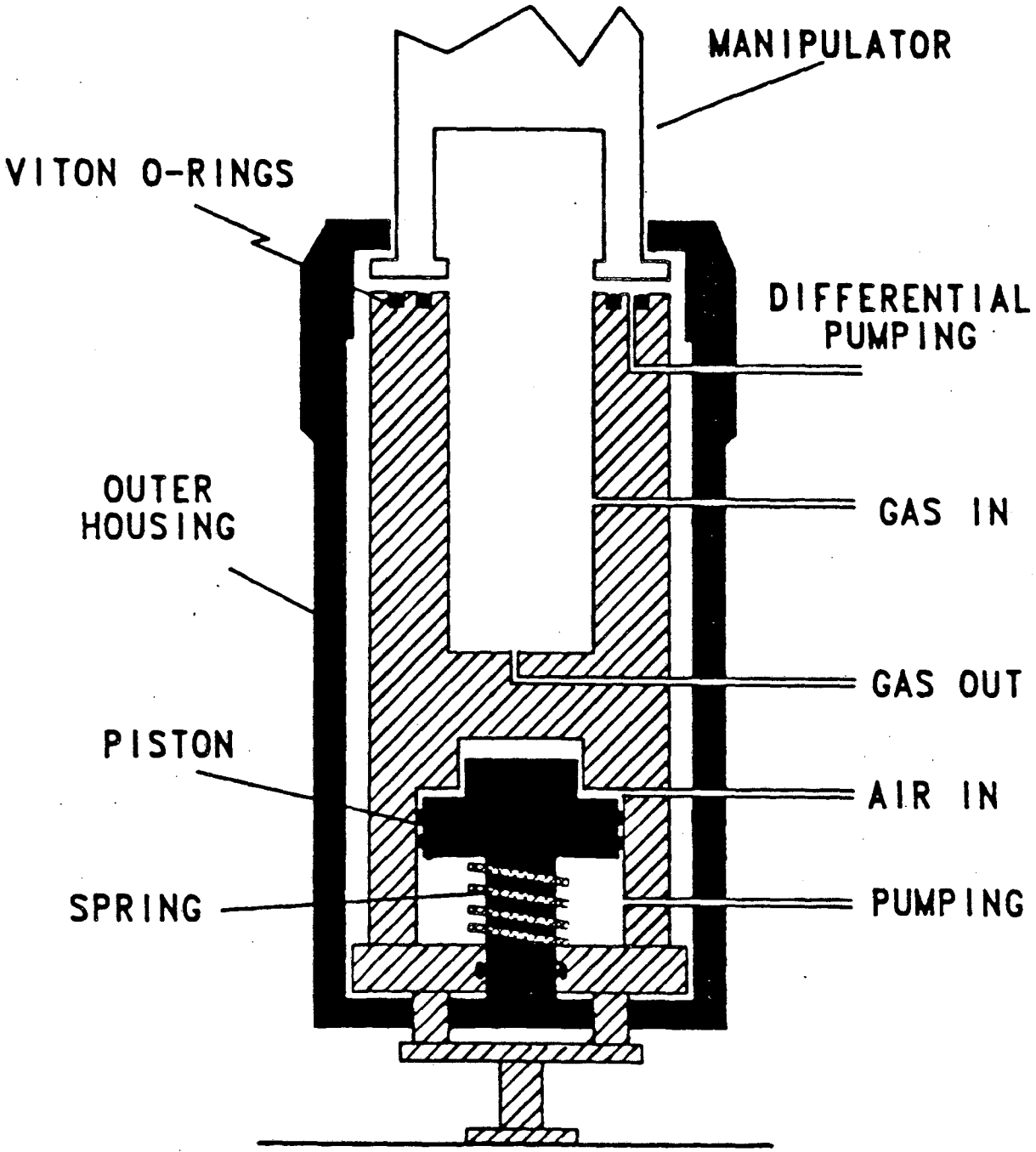
MANIPULATOR
VITON O-RINGS
DIFFERENTIAL PUMPING
OUTER HOUSING
GAS IN
GAS OUT
PISTON
AIR IN
SPRING
PUMPING

XBL 871-367

LAWRENCE BERKELEY LABORATORY
TECHNICAL INFORMATION DEPARTMENT
UNIVERSITY OF CALIFORNIA
BERKELEY, CALIFORNIA 94720