UC-34A
LBL-23711
c.1

Lawrence Berkeley Laboratory
UNIVERSITY OF CALIFORNIA

Accelerator & Fusion Research Division

RECEIVED
LAWRENCE
BERKELEY LABORATORY

OCT 19 1987

LIBRARY AND
DOCUMENTS SECTION

Presented at the IAEA Topical Committee Meeting
on Negative Ion Beam Heating,
Abingdon, England, July 15–17, 1987

Volume Production of Li^- in a Multicusp Ion Source

S.R. Walther, K.N. Leung, and W.B. Kunkel

July 1987

For Reference

Not to be taken from this room

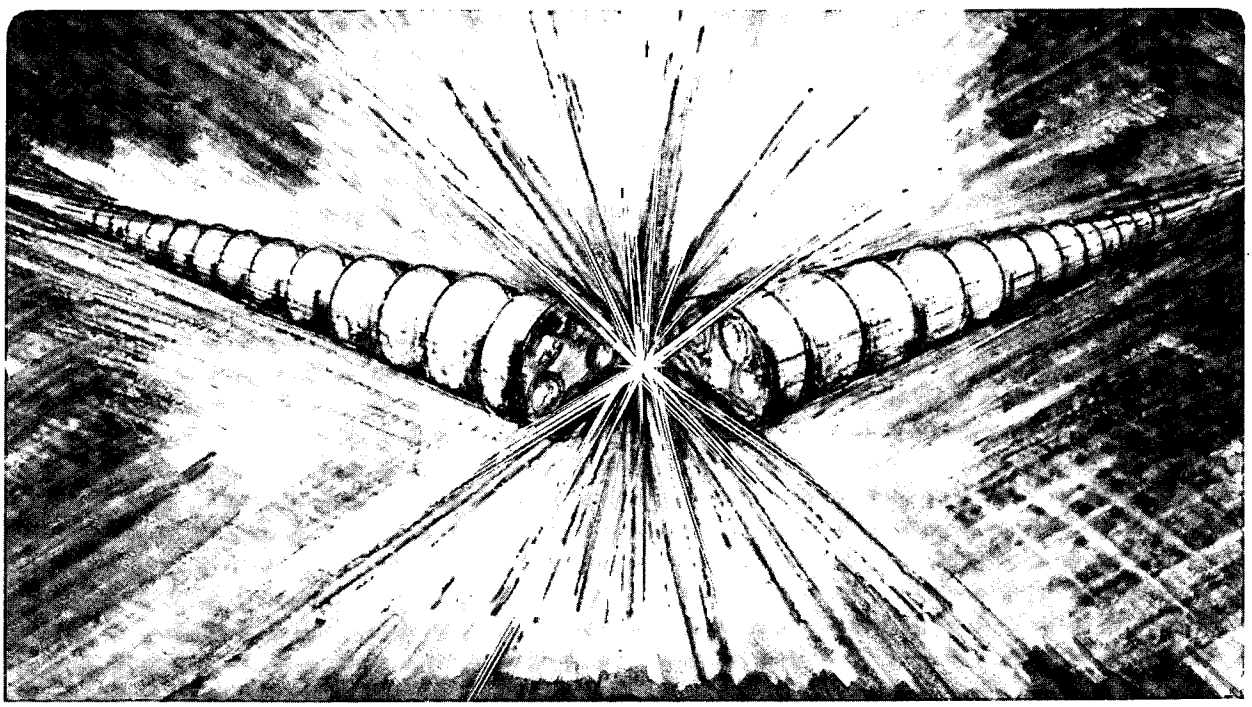

LBL-23711
c.1

Prepared for the U.S. Department of Energy under Contract DE-AC03-76SF00098

DISCLAIMER

This document was prepared as an account of work sponsored by the United States Government. While this document is believed to contain correct information, neither the United States Government nor any agency thereof, nor the Regents of the University of California, nor any of their employees, makes any warranty, express or implied, or assumes any legal responsibility for the accuracy, completeness, or usefulness of any information, apparatus, product, or process disclosed, or represents that its use would not infringe privately owned rights. Reference herein to any specific commercial product, process, or service by its trade name, trademark, manufacturer, or otherwise, does not necessarily constitute or imply its endorsement, recommendation, or favoring by the United States Government or any agency thereof, or the Regents of the University of California. The views and opinions of authors expressed herein do not necessarily state or reflect those of the United States Government or any agency thereof or the Regents of the University of California.

LBL-23711

Paper presented at the IAEA Topical Committe Meeting on Negative Ion Beam Heating at Culham Laboratory, July 15-17, 1987.

VOLUME PRODUCTION OF LI^- IN A MULTICUSP ION SOURCE*

S. R. Walther, K. N. Leung, and W. B. Kunkel
Lawrence Berkeley Laboratory
University of California
Berkeley, CA 94720, U.S.A.

High energy beams of neutral lithium atoms have applications in neutral beam heating of fusion plasmas and plasma diagnostics. Specifically, a neutral 100kev Li beam has been used as a diagnostic tool for determining current, plasma density, and magnetic pitch angle on the Texas EXperimental Tokamak (TEXT).[1] Scale up of this diagnostic for the Tokomak Fusion Test Reactor (TFTR) would require use of a Li^- beam because of the inefficiency of neutralizing Li^+ at the high energies required.[2] Previous efforts to generate Li^- beams have focused on electron capture in a gas[3] or production on a low work function surface in a plasma.[4,5] Volume Li^- production by dissociative attachment of optically pumped lithium molecules has also been studied.[6] In this paper we report the first volume production of a Li^- ion beam from a plasma discharge. In the volume of a plasma, Li^- ions are presumed to be formed via dissociative attachment to vibrationally and rotationally excited Li_2

---

*Work supported by the Air Force Office of Scientific Research and the U.S. Department of Energy under Contract #DE-AC03-76SF00098.

molecules,[7] a process very similar to the production of H^- ions.[8] Li_2 molecules are first formed by evaporation or by three body recombination of Li atoms; subsequent electron impact excitation provides a population of vibrationally and rotationally excited Li_2 molecules.

The ion source uses a cylindrical water cooled copper chamber (2.5 cm diameter by 5 cm long) with the open end enclosed by a two grid ion extraction system. Inside the source chamber is a heat shield constructed of molybdenum sheet metal (7.6×10^{-3} cm thick). A solid sample of lithium metal is placed in the heat shield and evaporates during operation due to discharge heating. A schematic diagram of the ion source is shown in Fig. 1. The source chamber is surrounded externally by 16 columns of ceramic magnets to form a longitudinal line-cusp configuration for primary electron and plasma confinement. Fig. 2 shows a computer plot of the magnetic field produced by the longitudinal line-cusp magnets.

In this experiment, argon was used as a supporting gas to initiate the discharge. Typical discharge parameters are: an arc voltage of 40V and an arc current of 4A. The mass spectrometer output signal in Fig. 3(a) shows that $^6Li^+$, $^7Li^+$, and Li_2^+ are present in the extracted ion beam with $^7Li^+$ composing 80% of the beam. A small peak shows the presence of ions at mass 13. These are Li_2^+ ions formed by the combination of ^6Li and ^7Li atoms. Ar^+ ions are present in the extracted beam but the signal is too small to be seen on the same scale. Figure 3(b) shows a mass spectrometer trace of the negative ion species extracted from the source plasma. Only Li^- ions (both $^6Li^-$ and $^7Li^-$) were detected.

The maximum negative ion current measured was 14.9uA (corresponding to a current density of 1.9 mA/cm^2) for a discharge voltage of 40V and

discharge current of 4A. The extracted electron current measured by the mass separator was 3.75 mA which gives an electron to ion ratio of 250 to 1 for the extracted beam. The ion source was capable of steady-state operation. However, due to the condensation of lithium vapor on the water cooled extraction plates, the source could be operated for only a short period of time (~ 2-3 min.) before the extraction apertures were clogged with lithium. This observation indicates that a "hot" extraction electrode system is needed for steady-state operation. As far as we are aware, these are the first measurements of volume produced Li^- current density and electron-to-ion ratio.

References

1. D. M. Thomas, W. P. West, and S. Zheng, Bull. Am. Phys. Soc., 31(9), 1574, (1986).
2. M. M. Menon, IEEE Proc., 69(8), 1012, (1981).
3. J. R. Mowat, E. E. Fisch, A. S. Schlachter, J. W. Stearns, and Y. K. Bae, Phys. Rev. A, 31(5), 2893, (1985).
4. J. W. Stearns, R. V. Pyle, and F. Tehranian, J. Vac. Sci. Technol. A, 4(3), (1986).
5. E. H. A. Granneman et. al., Proc. 3rd Int. Symp. on the Production and Neutralization of Negative Ions and Beams, p. 206, Brookhaven National Laboratory, (1983).
6. M. W. McGeoch and R. E. Schlier, Phys. Rev. A, 33(3), 1708, (1983).
7. J. M. Wadehra and H. H. Michels, Chem. Phys. Lett., 114(4), 380, (1985).
8. J. M. Wadehra and J. N. Bardsley, Phys. Rev. Lett., 41,1795, (1978). (1985).

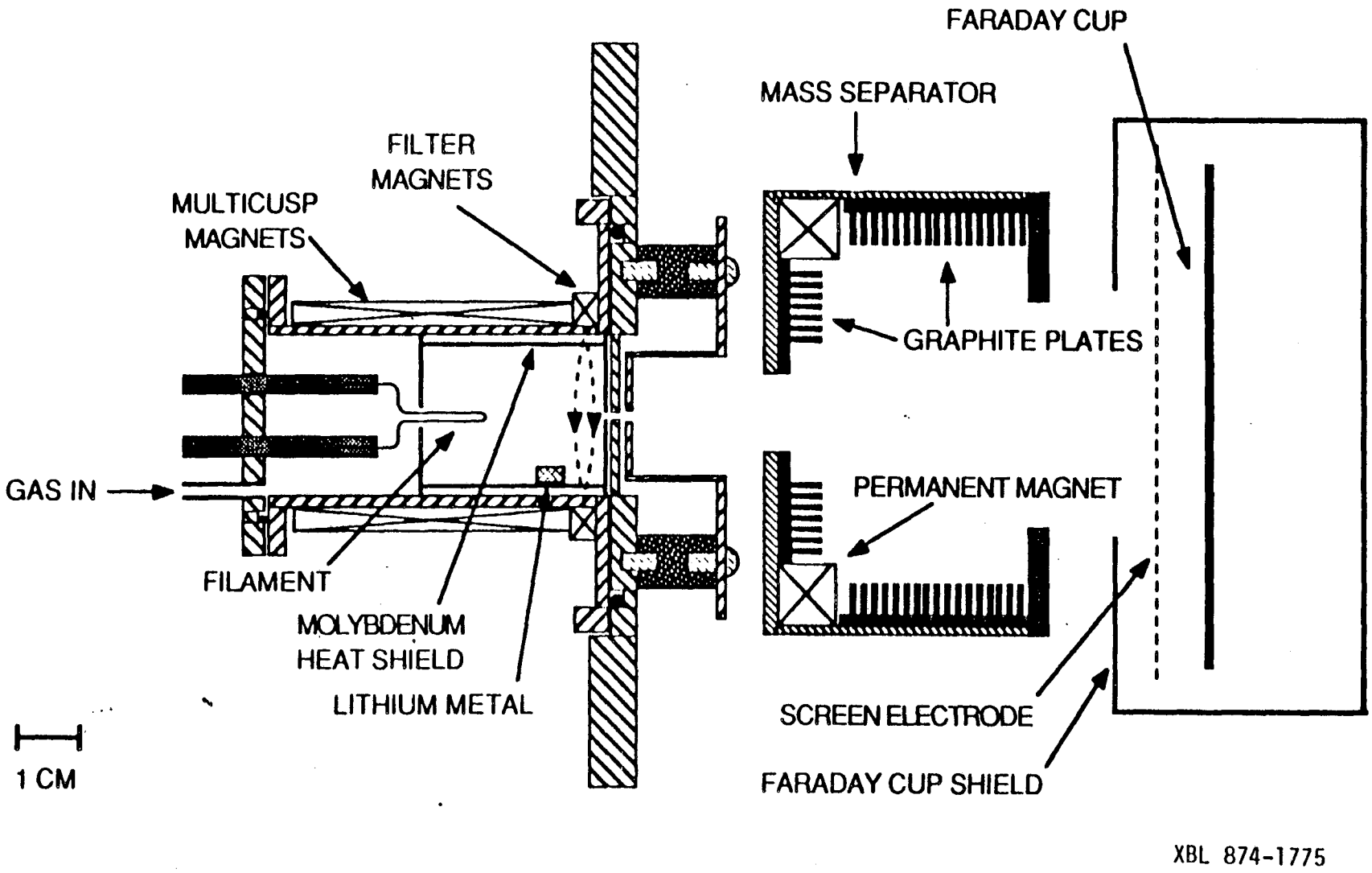

Figure 1 A schematic drawing of the ion source and apparatus for measuring negative ion and electron currents.

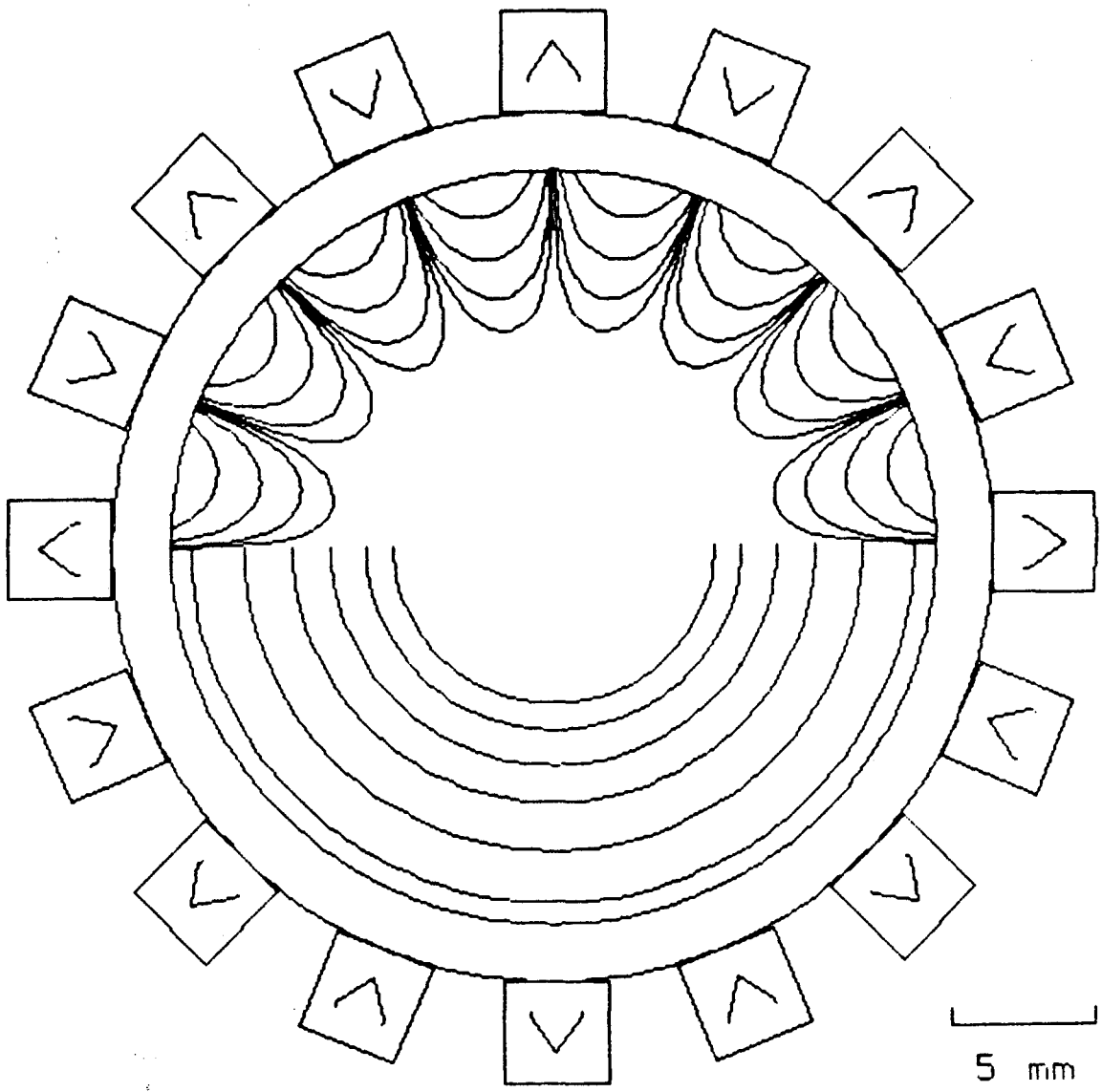

XBL 874-1776

Figure 2 A computer plot of the magnetic field produced by the multicusp magnets surrounding the ion source. The upper half plot shows the field lines (1,3,10,30 gauss–cm), and the lower half plot shows the field intensity contours (1,3,10,30,100,300 gauss).

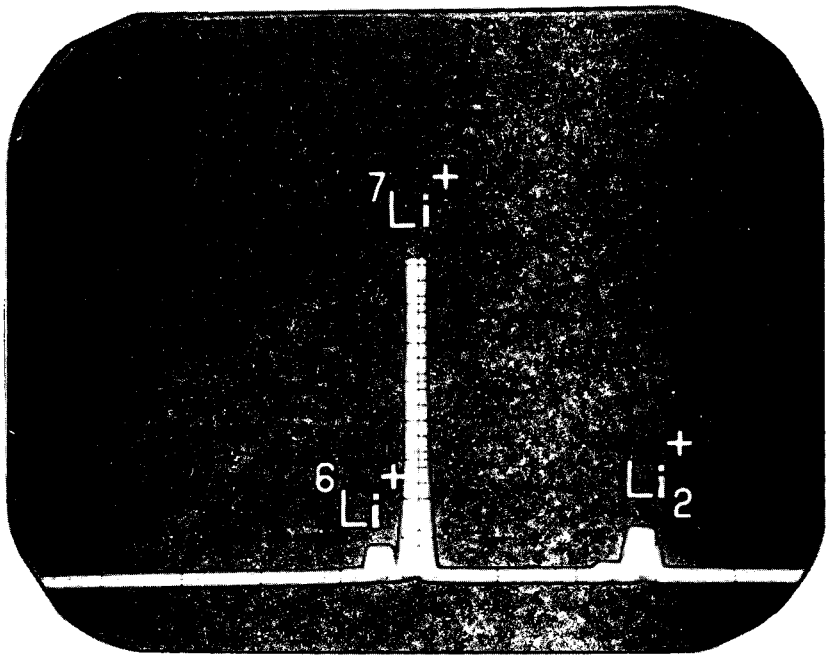

(a)

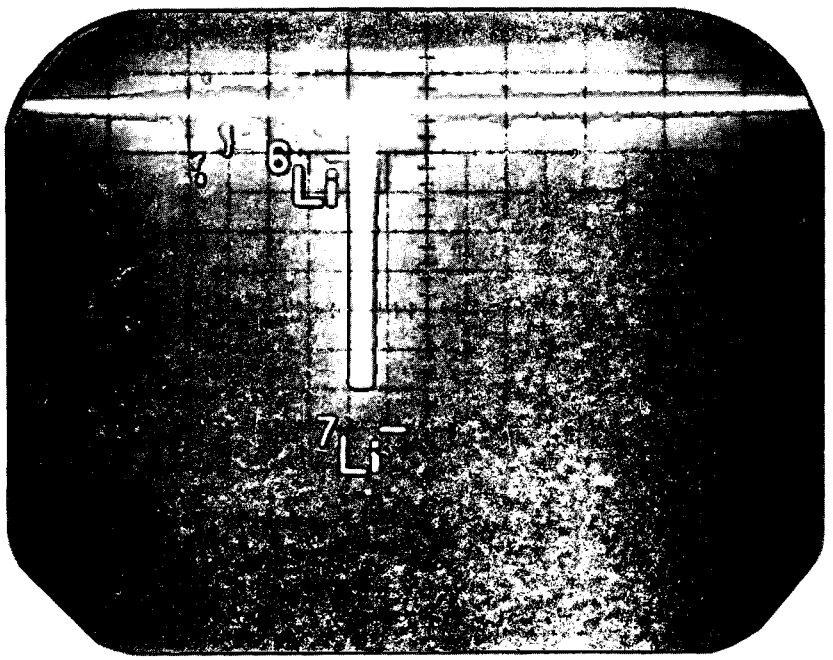

(b)

XBB 874-3134

Figure 3. Mass spectrometer output signals showing (a) the positive ion species and (b) the negative ion species in the extracted ion beam.

LAWRENCE BERKELEY LABORATORY
TECHNICAL INFORMATION DEPARTMENT
UNIVERSITY OF CALIFORNIA
BERKELEY, CALIFORNIA 94720