UC-37
LBL-23842 c.1

Lawrence Berkeley Laboratory
UNIVERSITY OF CALIFORNIA

Materials & Chemical Sciences Division

RECEIVED
LAWRENCE
BERKELEY LABORATORY

OCT 1 1987

LIBRARY AND
DOCUMENTS SECTION

Presented at the CAMS/NRC 1987 Workshop on Molecular and Cluster Beam Science, Washington, DC, April 24, 1987, and to be published in the Proceedings

Vibrational Spectroscopy of Cluster Ions: Two Novel Methods

L.I. Yeh, M. Okumura, J.D. Myers, and Y.T. Lee

July 1987

For Reference

Not to be taken from this room

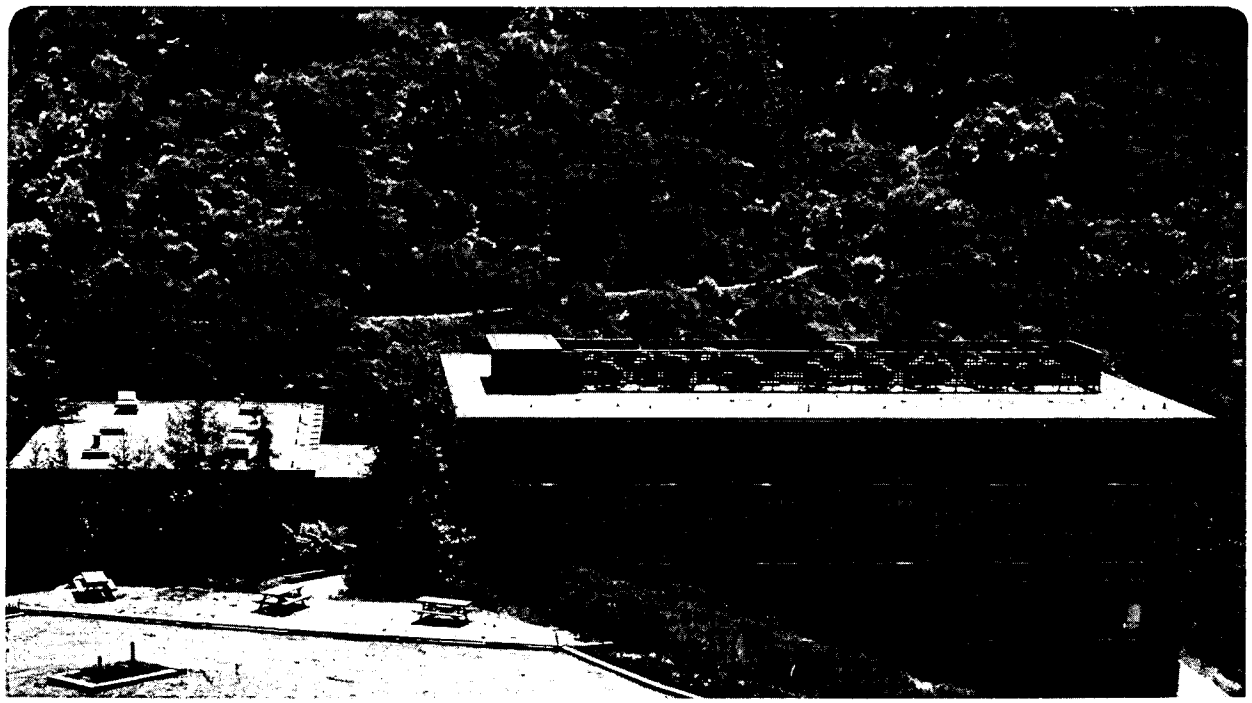

Prepared for the U.S. Department of Energy under Contract DE-AC03-76SF00098

LBL-23842 c.1

DISCLAIMER

This document was prepared as an account of work sponsored by the United States Government. While this document is believed to contain correct information, neither the United States Government nor any agency thereof, nor the Regents of the University of California, nor any of their employees, makes any warranty, express or implied, or assumes any legal responsibility for the accuracy, completeness, or usefulness of any information, apparatus, product, or process disclosed, or represents that its use would not infringe privately owned rights. Reference herein to any specific commercial product, process, or service by its trade name, trademark, manufacturer, or otherwise, does not necessarily constitute or imply its endorsement, recommendation, or favoring by the United States Government or any agency thereof, or the Regents of the University of California. The views and opinions of authors expressed herein do not necessarily state or reflect those of the United States Government or any agency thereof or the Regents of the University of California.

VIBRATIONAL SPECTROSCOPY OF CLUSTER IONS: TWO NOVEL METHODS

L. I. Yeh, M. Okumura[a], J. D. Myers[b], and Y. T. Lee
Materials and Chemical Sciences Division,
Lawrence Berkeley Laboratory and
Department of Chemistry, University of California,
Berkeley, CA 94720

INTRODUCTION

Studying the vibrational spectroscopy of cluster ions, such as the hydrated hydronium ions, is an inherently difficult problem. Although one may study these species in the liquid phase or in a gas cell where their densities are relatively high, these methods have the disadvantage of ambiguity in assigning absorption features to a given species. The recently developed velocity modulation technique[1] in gaseous discharge plasmas has provided important information on high resolution infrared absorption spectra of molecular ions, but weakly bound ionic clusters are not abundant in high temperature plasmas. Using an ion beam has the advantage of mass selection capability, but at the expense of orders of magnitude in ion density. This makes traditional absorption spectroscopy nearly impossible. Thus, one has to depend on the observation of the consequence of photon absorption rather than the attenuation of photon intensity due to absorption.

For very weakly bound ionic clusters such as H_5^+, H_7^+, H_9^+, etc. excitation of vibrational degrees of freedom induce the dissociation and one can use the vibrational predissociation process to obtain vibrational spectra as has been done in the

a) Present address: Chemistry Department, University of Chicago, Chicago, IL 60637.
b) NSF Pre-doctoral Fellow

investigation of neutral molecular clusters. But there are many cluster ions, such as the hydrated hydronium ions, whose binding energy far exceeds the energy of vibrational quanta and the vibrational predissociation process will not take place by exciting the fundamental molecular vibration. In our recent ion beam study of the hydrated hydronium ions, we have overcome these obstacles by utilizing two complementary techniques. Both methods take advantage of the inherently high sensitivity of ion detection.

The first approach is to attach a H_2 molecule to the hydrated hydronium ions. Because the original goal was to study the hydrated hydronium ions, the attached H_2 is hoped to have only a small effect on the spectrum. After an O-H stretch of the cluster ion has been excited, it vibrationally predissociates, losing the H_2. In a sense, the H_2 is a messenger which indicates when an absorption has taken place. By monitoring the dissociation product as a function of laser frequency, the absorption spectra of these $H_3O^+.(H_2O)_n.H_2$ (n=1,2,3) ions have been found.[2]

The second approach is to detect the vibrationally excited $H_3O^+.(H_2O)_n$ (n=1,2,3) ions using an infrared multiphoton dissociation process. The procedure is to first excite from v=0 to v=1 in the O-H stretch using a tunable IR laser. We then make use of the fact that the density of states near v=0 and v=1 are very different, and the vibrationally excited ionic clusters, which contain many low frequency vibrations, are likely to be in the quasicontinuum region for the sequential excitation by a fixed frequency laser. This means that one can distinguish between ground state and vibrationally excited $H_3O^+.(H_2O)_n$ by using a multiphoton dissociation (MPD) process to selectively dissociate the latter using a CO_2 laser. Once again, we monitor the dissociation product ion signal as a function of the excitation frequency of the first laser to get the

absorption spectra of the $H_3O^+.(H_2O)_n$ ions. This paper will concentrate on $H_3O^+.H_2O$ as an example of these two novel experimental techniques.

The spectrum of $H_5O_2^+$ from 3550 to 3800 cm^{-1} is presented and compared to the spectrum of $H_5O_2^+.H_2$, which was reported previously.[3] A comparison with vibrational frequencies calculated using ab initio methods by Remington and Schaefer[4] is also made and implications regarding the structure are discussed.

EXPERIMENTAL APPROACH

The ions are created in a high pressure corona discharge source as shown in Fig. 1. Typical discharge conditions behind the nozzle are 1.2 kV from cathode to anode and 200 torr of H_2 gas containing trace amounts of H_2O. The beam containing various ionic clusters is formed by expanding the plasma through a 75 μm nozzle. The ions pass through two differential regions of pumping, in which they are skimmed and focused, before initial mass selection in a 60° sector magnet. This capability of mass selection allows us to eliminate the background ions completely as well as to unambiguously ascertain the identity of the ion being studied. In order to facilitate the interaction with the lasers, the ion of interest is then bent 90° by an electrostatic field and sent into a 50 cm long radio-frequency octopole ion trap. While the ions are trapped, they interact with a tunable infrared laser. A schematic of the apparatus is shown in Fig. 2.

Two different laser schemes were needed depending on the approach taken. When studying $H_3O^+.(H_2O)_n.H_2$, a single tunable infrared laser was needed. The system used was a Quanta-Ray infrared wavelength extender (IR-WEX), which is a difference frequency laser. The IR-WEX generates infrared at

the difference between the fundamental of a YAG laser and the output from a pulsed dye laser. The laser path between the output of the tunable infrared laser and the entrance of the machine was enclosed and continually flushed with dry nitrogen to reduce atmospheric water absorptions. In spite of this precaution, atmospheric water absorption was still a problem, accounting for much of the noise in the spectra introduced during the normalization by laser power. The laser path was flushed in both laser schemes.

The second laser scheme consists of two lasers and is used to investigate the more strongly bound $H_3O^+.H_2O$. The first laser is a Burleigh cw F-center laser which is scanned from 3550 to 3800 cm^{-1} with a linewidth of 0.5 cm^{-1}. This is the region of an O-H stretching vibration. The second laser, used to multiphoton dissociate the vibrationally excited $H_5O_2^+$ ions, is an MPB cw CO_2 laser. The frequency and intensity of the CO_2 laser is determined by trying to reach the ideal situation where none of the ground state $H_5O_2^+$ ions absorb enough photons to dissociate, but those in v=1 do dissociate into H_3O^+ and H_2O. In $H_5O_2^+$, as opposed to $H_7O_3^+$ and $H_9O_4^+$ which will be discussed in a future paper, the ground state ions do not readily absorb enough photons to dissociate. Therefore, the CO_2 laser is run full power (~6 W in the interaction region) on R(24) of the 00^01-02^00 transition. Since a cw CO_2 laser is used, the length of time the $H_5O_2^+$ ions reside in the octopole ion trap is a third variable which is optimized to achieve a low H_3O^+ background from those $H_5O_2^+$ ions that don't absorb an IR photon from the F-center laser and a high H_3O^+ signal from those $H_5O_2^+$ that do. In this case, 100 msec was found to be optimal. The residence time of the ions and the laser intensity together determine the energy fluence of the laser irradiation of the ions in the trap.

After the laser irradiation, ions are ejected from the exit lens of the rf ion trap. It is the fragment ions, not the parent ions, which are mass selected by an Extranuclear quadrupole mass filter and sent into a Daly-type ion detector. Specifically, when studying $H_5O_2^+.H_2$, the quadrupole mass filter selects $H_5O_2^+$ fragment ions; when studying $H_5O_2^+$, the H_3O^+ ions are mass selected. By monitoring the fragment ion signal as a function of the tunable IR laser frequency, the vibrational spectrum is obtained.

RESULTS AND DISCUSSION

The <u>ab initio</u> calculations on the structures and frequencies of the hydrated hydronium ions, $H_3O^+.(H_2O)_n$ (n=1,2,3), have been carried out by Remington and Schaefer.[4] For $H_5O_2^+$, the proton in the center is shared by two H_2O molecules, but for larger clusters, the H_3O^+ unit forms the core which is solvated by H_2O's in strong hydrogen bonds. Kebarle[5] has measured the binding energies to be 31.6, 19.5, and 17.9 kcal/mole for n=1,2,and 3, respectively.

The two lowest energy structures of $H_5O_2^+$, which are shown in Fig. 3, are the C_2 and C_s structures. At the CISD level of theory, using a DZ+P basis set, they differ in energy by less than 0.2 kcal/mole, with the symmetric structure being lower. This structure agrees with our vibrational spectrum shown in Fig. 4. The dashed lines in the figure indicate the predicted vibrational frequencies and intensities for the C_2 structure where the central H atom is equidistant between the two oxygen atoms.

Contrast the $H_5O_2^+$ spectrum with that of $H_5O_2^+.H_2$ shown in Fig. 5. Rather than two principle absorptions, four are now evident. This indicates a loss of symmetry and consequently a splitting of the degenerate vibrations. The dashed lines in Fig. 5 correspond to the frequencies and intensities

predicted for $H_5O_2^+$ at the SCF level of theory for the asymmetric C_s geometry where the central H is closer to one of the oxygen atoms. The presence of the H_2 on the H_3O^+ core stabilizes the asymmetric C_s structure causing it to be the dominant structure. Although the H_2 messenger is bound very weakly, its presence has a tremendous impact on the vibrational spectra.

The two features of the spectrum of $H_5O_2^+$ from 3550 to 3800 cm^{-1} are due to O-H stretches. The feature near 3609 cm^{-1} is assigned to the symmetric O-H stretch of the H_2O units and is broad and featureless. The more striking feature centered at 3696 cm^{-1} corresponds to the antisymmetric O-H stretch of the H_2O units and is shown resolved into a perpendicular band progression of Q-branches. The separation of the Q-branch positions is ~11.6 cm^{-1}. This agrees with the spacing predicted by the theoretical C_2 structure, although the significance of this agreement is not known due to the nonrigidity of the molecule. High resolution spectra have been resolved under the central Q-branches and are in the process of being analyzed.

We also are able to take Doppler limited high resolution spectra as shown in Fig. 6, by operating the F-center laser single mode. The Doppler width arises from the motion of the ions travelling back and forth in the octopole ion trap, giving a linewidth of 0.02 cm^{-1}. This band is the antisymmetric O-H stretch of the solvent H_2O moieties in $H_9O_4^+$. The apparent structure on the sides has a separation of 0.18 cm^{-1} which seems to be due to the end over end rotation of the $H_9O_4^+$ ion.

CONCLUDING REMARKS

We have briefly discussed two sensitive techniques for obtaining vibrational spectra of cluster ions. Although H_2

may not be the ideal choice for a "messenger" due to its perturbation of the spectra, the feasibility of the technique has been demonstrated warranting further development of this approach. The second method, which makes use of MPD, has been proven capable of obtaining high resolution spectra of low density cluster ions. In fact, this technique is ideally suited to study cluster ions because of the abundance of low frequency modes in cluster ions making the multiphoton dissociation process more facile.

ACKNOWLEDGMENTS

This work was supported by the Director, Office of Energy Research, Office of Basic Energy Sciences, Chemical Sciences Division of the U.S. Department of Energy under Contract No. DE-AC03-76SF00098. The F-center laser was on loan from the San Francisco Laser Center, a National Science Foundation Regional Instrumentation Facility, NSF Grant No. CHE79-16250 awarded to the University of California at Berkeley in collaboration with Stanford University. We also thank R. Remington, and H. Schaefer for providing us with results of unpublished calculations.

REFERENCES

1. R. J. Saykally and C. S. Gudeman, Annu. Rev. Phys. Chem. 35, 387 (1984).
2. M. Okumura, L. I. Yeh, J. D. Myers, and Y. T. Lee, J. Chem. Phys. 85, 2328 (1986).
3. M. Okumura, Ph. D. Thesis, University of California, Berkeley, 1986.
4. R. B. Remington and H. F. Schaefer, unpublished results.
5. Y. K. Lau, S. Ikuta, and P. Kebarle, J. Am. Chem. Soc. 104, 1463 (1982).

FIGURE CAPTIONS

Fig. 1 Schematic of the corona discharge ion source.

Fig. 2 Schematic of the tandem mass spectrometer and octopole ion trap.

Fig. 3 Two lowest energy structures for $H_5O_2^+$ using a DZ+P basis set and configuration interaction with single and double excitations.

Fig. 4 Infrared spectrum of $H_5O_2^+$ taken with the two laser scheme and detecting the H_3O^+ dissociation product. The linewidth of the F-center laser was 0.5 cm^{-1}.

Fig. 5 Infrared spectrum of $H_5O_2^+.H_2$ taken using the Quanta-Ray IR-WEX ($\Delta\nu \sim 1.2$ cm^{-1}) and detecting the $H_5O_2^+$ dissociation product.

Fig. 6 Infrared spectrum of $H_9O_4^+$ taken with the two laser scheme. The F-center laser was operated with its intracavity etalon giving it a theoretical linewidth of 3×10^{-5} cm^{-1}. The Doppler width due to the motion of the trapped $H_9O_4^+$ moving back and forth in the ion trap was 0.02 cm^{-1}. $H_7O_3^+$ dissociation product was monitored as a function of the F-center laser frequency.

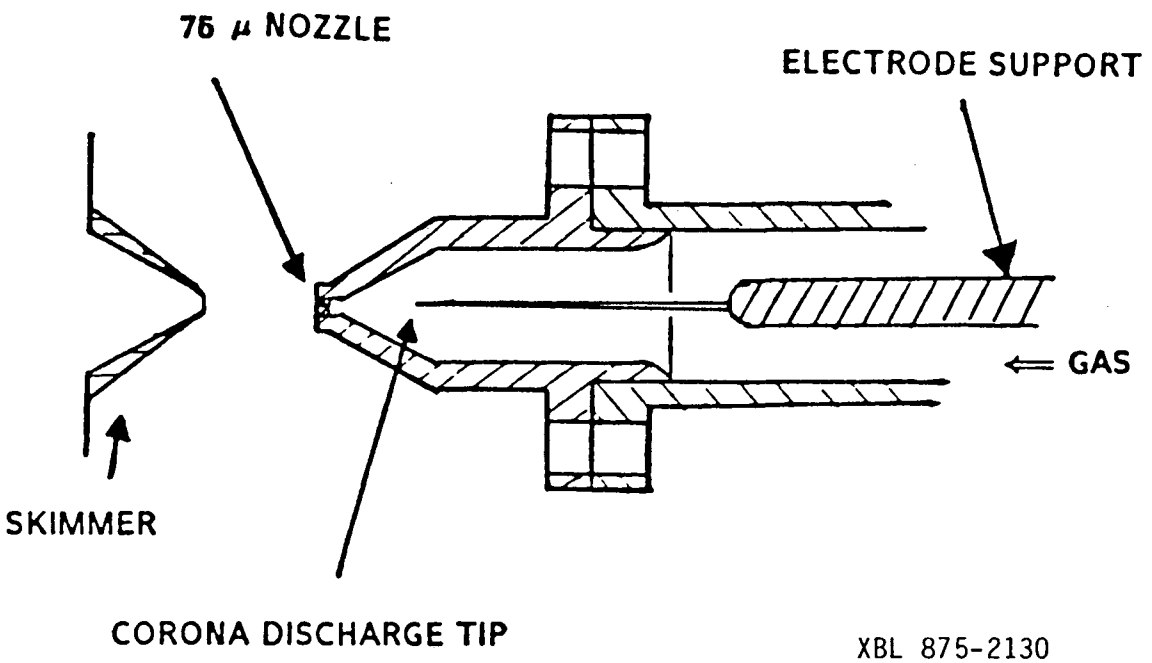
75 μ NOZZLE
ELECTRODE SUPPORT
GAS
SKIMMER
CORONA DISCHARGE TIP
XBL 875-2130

Fig. 1

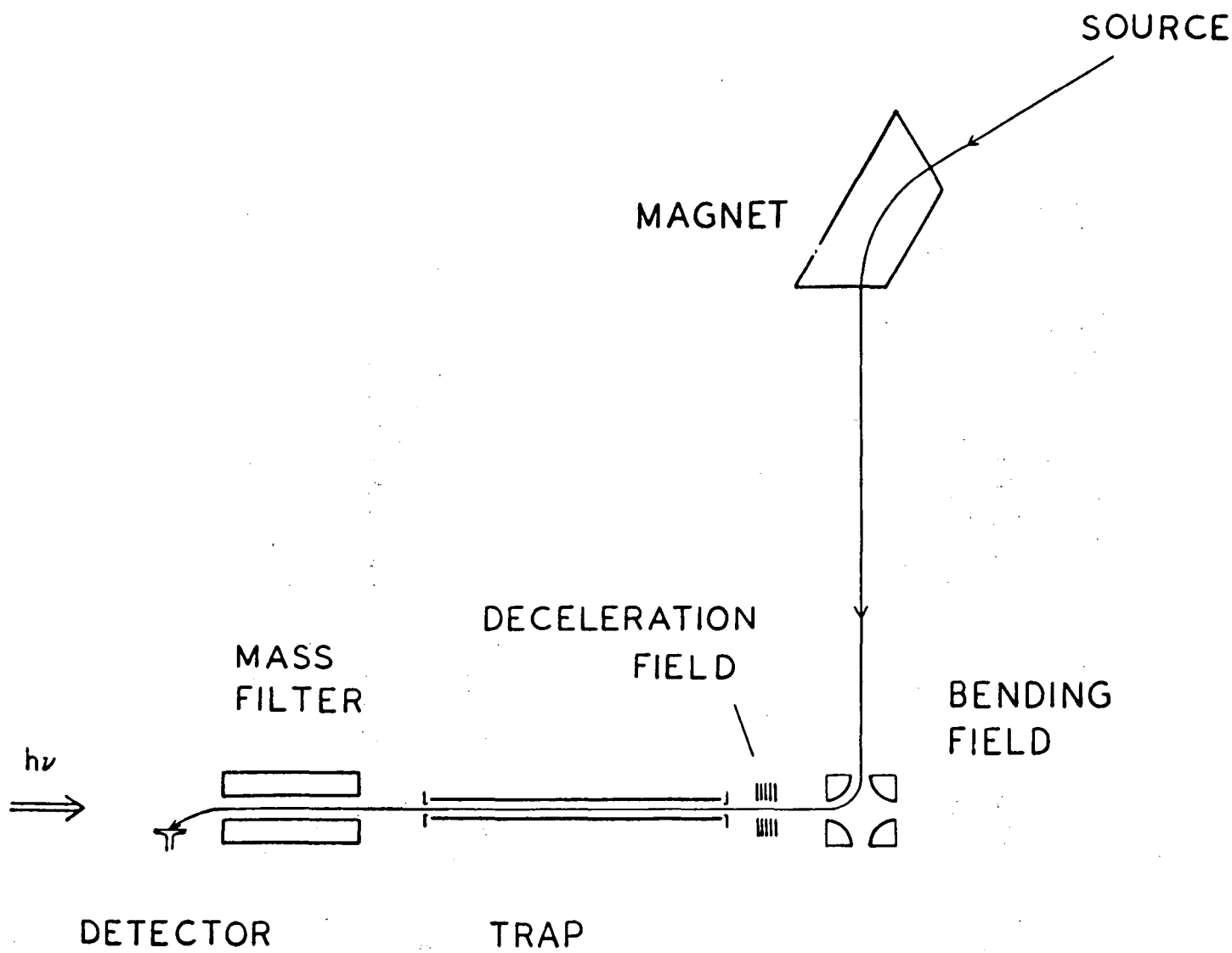

XBL 857-3143

Fig. 2

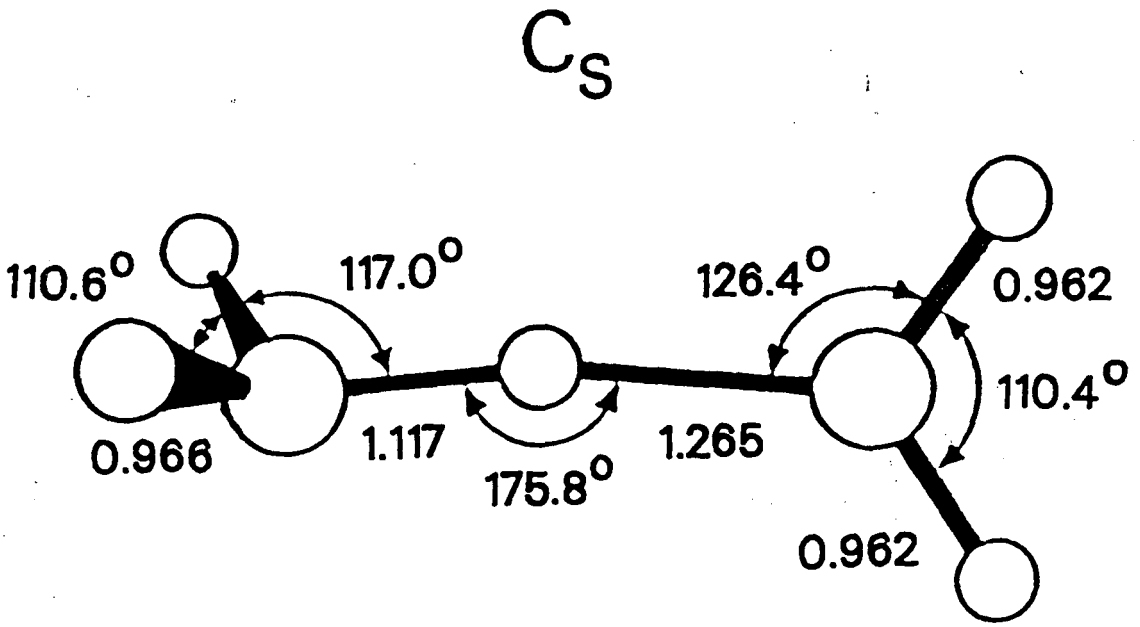

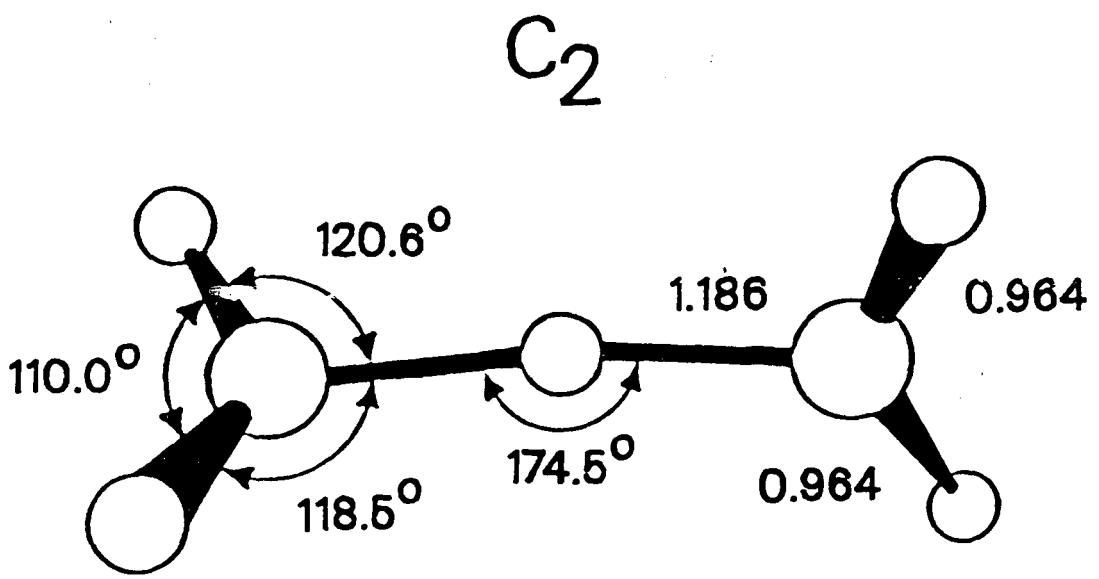

XBL 875-2129

Fig. 3

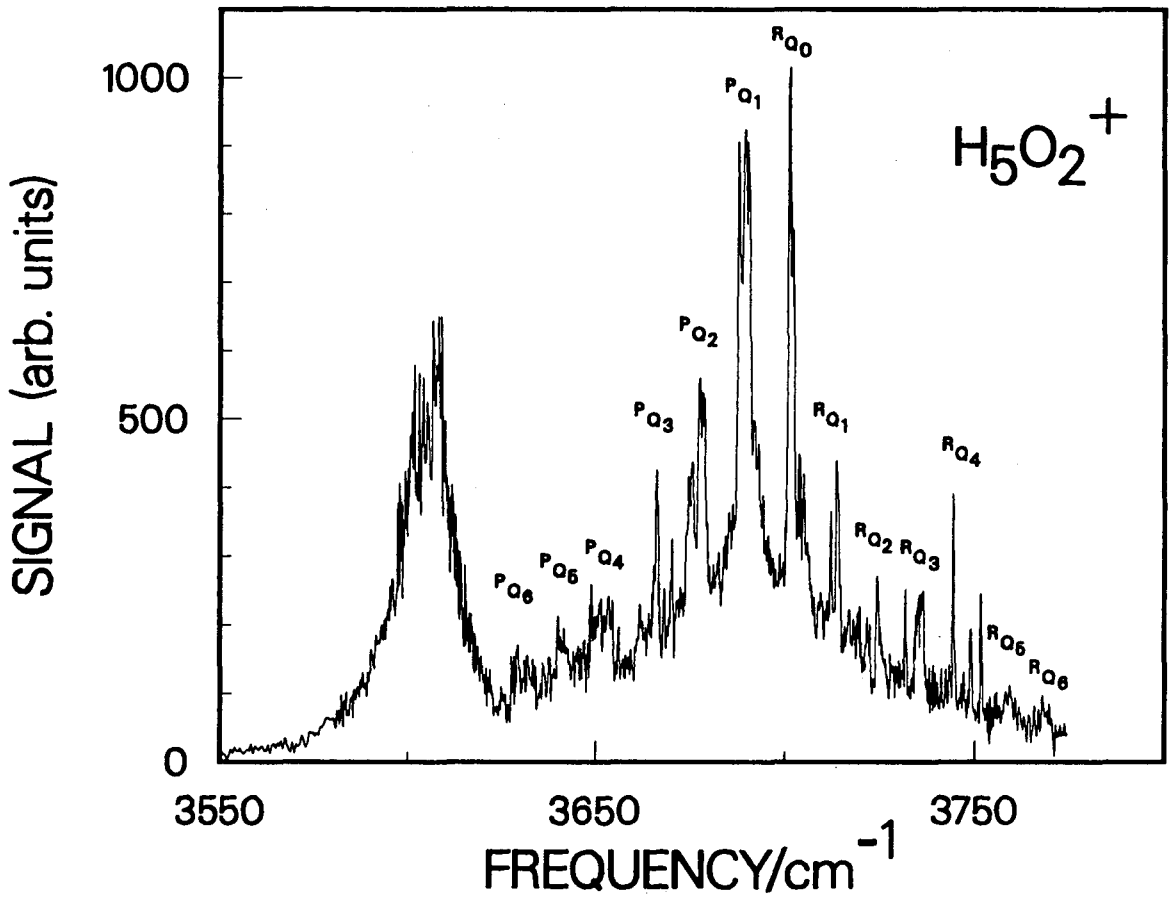
1000
500
0
SIGNAL (arb. units)
3550
3650
3750
FREQUENCY/cm-1
H5O2+
RQ0
PQ1
PQ2
PQ3
PQ4
PQ5
PQ6
RQ1
RQ2
RQ3
RQ4
RQ5
RQ6

Fig. 4

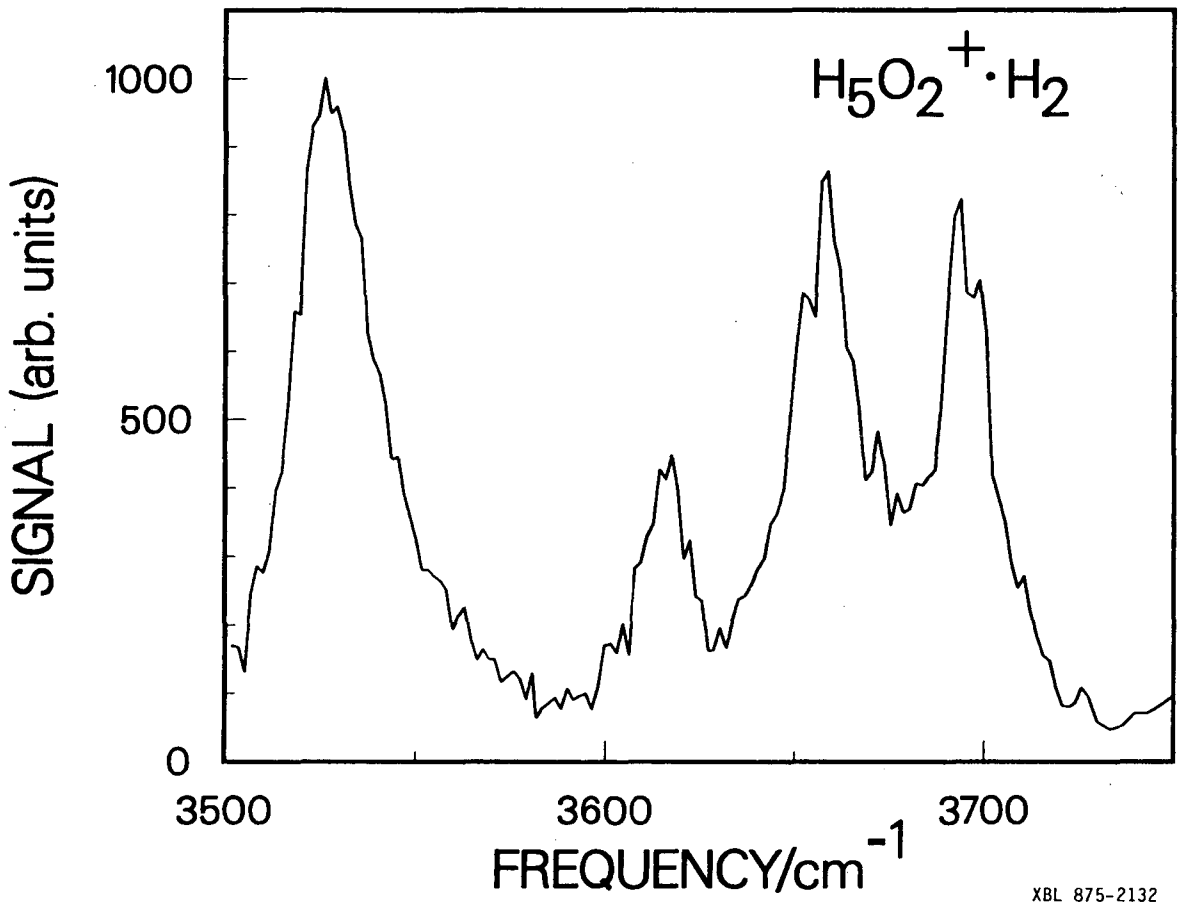
$H_5O_2^+ \cdot H_2$
1000
500
0
SIGNAL (arb. units)
3500
3600
3700
FREQUENCY/cm^{-1}
XBL 875-2132

Fig. 5

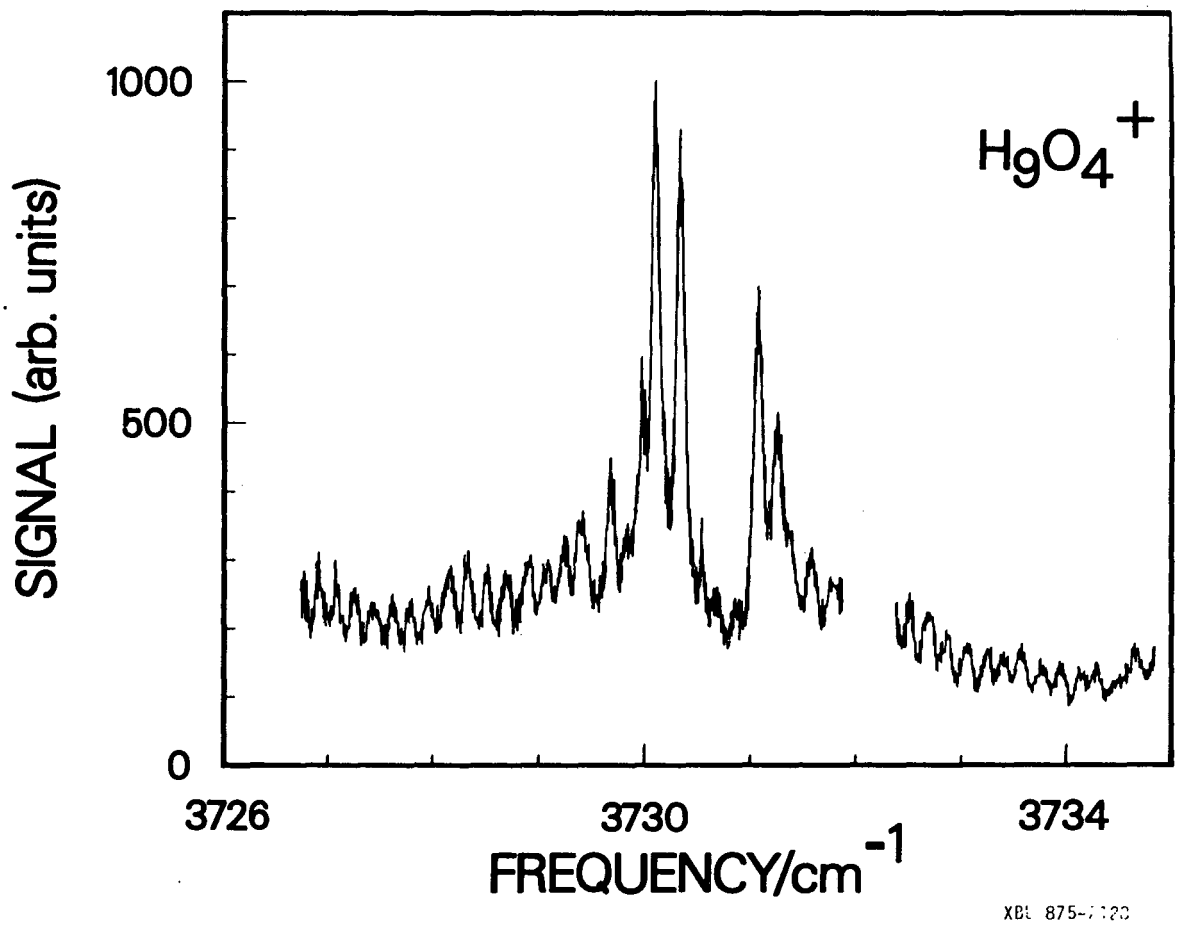
1000
500
0
SIGNAL (arb. units)
$H_9O_4^+$
3726
3730
3734
FREQUENCY/cm^{-1}
XBL 875-7120

Fig. 6

LAWRENCE BERKELEY LABORATORY
TECHNICAL INFORMATION DEPARTMENT
UNIVERSITY OF CALIFORNIA
BERKELEY, CALIFORNIA 94720