LBL-23909 c.2

Lawrence Berkeley Laboratory
UNIVERSITY OF CALIFORNIA

RECEIVED
LAWRENCE
BERKELEY LABORATORY

FEB 1 1988

LIBRARY AND
DOCUMENTS SECTION

Presented at the International Conference
on ECR Ion Sources and their Applications,
East Lansing, MI, November 16–18, 1987

Operating Experience with the LBL ECR Source

C.M. Lyneis

December 1987

TWO-WEEK LOAN COPY
This is a Library Circulating Copy
which may be borrowed for two weeks.

NUCLEAR SCIENCE DIVISION

LBL-23909 c.2

Prepared for the U.S. Department of Energy under Contract DE-AC03-76SF00098

DISCLAIMER

This document was prepared as an account of work sponsored by the United States Government. While this document is believed to contain correct information, neither the United States Government nor any agency thereof, nor the Regents of the University of California, nor any of their employees, makes any warranty, express or implied, or assumes any legal responsibility for the accuracy, completeness, or usefulness of any information, apparatus, product, or process disclosed, or represents that its use would not infringe privately owned rights. Reference herein to any specific commercial product, process, or service by its trade name, trademark, manufacturer, or otherwise, does not necessarily constitute or imply its endorsement, recommendation, or favoring by the United States Government or any agency thereof, or the Regents of the University of California. The views and opinions of authors expressed herein do not necessarily state or reflect those of the United States Government or any agency thereof or the Regents of the University of California.

LBL-23909

Operating Experience with the LBL ECR Source*

C.M. Lyneis
Nuclear Science Division, Lawrence Berkeley Laboratory,
University of California, Berkeley, California 94720

*This work was supported by the Director, Office of Energy Research, Division of Nuclear Physics of the Office of High Energy and Nuclear Physics and by Nuclear Sciences of the Basic Energy Sciences Program of the U.S. Department of Energy under Contract DE AC03-76SF00098.

OPERATING EXPERIENCE WITH THE LBL ECR SOURCE*

C.M. LYNEIS
Lawrence Berkeley Laboratory

The overall performance of the LBL ECR source in providing beam for the 88-Inch Cyclotron has been excellent. However, during the past two years there have been some fluctuations in the peak performance, particularly for the highest charge states. Among the factors which influence the peak performance are coatings from solid feeds or gases such as SiH_4 or CO_2, changes in first stage output, and variation in outgassing rates on the wall. Modifications made to the source have also affected its performance. In the plasma chamber the screens between the sextupole bars were removed to lower its Q_o. When the 9.2 GHz klystron used to power the first stage failed, it was replaced by a 10.3 GHz klystron. Tests were also made using 6.4 GHz to drive both first and second stages. The source performance in these various configuration will be reviewed.

Introduction

The LBL ECR began test operation in January 1984 and regular operation with the 88-Inch Cyclotron in January 1985. During a normal operating year 80% of the approximately 5000 hours of cyclotron operation use the ECR source. Light-ion operation with the internal filament source and the polarized ion source make up the remainder of the time. The ECR source is the only heavy-ion source available for the cyclotron, since the heavy-ion PIG sources were decommissioned shortly after ECR source operation began. The extensive use of the ECR source makes its reliable operation essential. Additional requirements include stable operation, flexibility, simplicity in tuning, and reproducibility. In the first part of this paper, I will discuss how well the source has met these requirements and describe some of the modifications and improvements which have been made in the transition from a test device to a day to day operating device. In the second part of the paper, I will discuss some things which we have learned about technical issues related to ECR source performance including coupling of microwaves to the plasma and how coatings on the wall affects on the charge state distribution .

Operations

The LBL ECR, shown schematically in Fig. 1 has now operated for approximately 18,000 hours. The source parameters for the the LBL ECR are summarized in Table 1. Overall, the reliability has been extremely good, and the loss of beam time due to source problems has been minimal. Many of the problems have been minor ones such as leaks in gate valves and malfunctions in the gas metering valves. The vacuum system on the injection line consists of a combination of turbomolecular pumps and cryopumps. Generally a failure of one of these devices can be tolerated during a run and it can be repaired or replace during the regular Monday maintenance period. The occasional loss of a solenoid power supply on the ECR is quickly remedied by having redundant supplies.

The most serious breakdown occurred in June 1987, when the 9.2 GHz 1 kW klystron used to power the first stage failed. The klystron model VA-922B was built in 1967 for the US Army. At the time of its failure (cathode short to ground) it had at least 20,000 hours of operation. Fortunately, no time was lost on the cyclotron since the beam intensities required by the scheduled experiments the following week could be met by operating the source as a single stage device and the remaining operating time until the summer shutdown was scheduled for polarized ions. Since the tube is no longer manufactured, we tried two solutions: first using 6.4 GHz to drive the first stage and second operating the first stage with a 10.3 GHz klystron.[1] To power both stages at 6.4 GHz, we initially used a power splitter to divide the power from a single 3 kW klystron. Although the source could be operated this way, there was a strong interaction between the stages because reflected power from one stage coupled power into the other through the power splitter. The interaction problem could have been avoided if high power microwave isolators had been available. More stable operation was achieved using separate 6.4 GHz klystrons to drive each stage. Still the performance was not as good as the performance of the old combination of 9.2 GHz and 6.4 GHz. After operating both stages at 6.4 GHz for a few weeks, the 10.3 GHz klystron was installed. After some modifications to the RF coupling in the first stage and the addition of iron to increase the axial magnetic field, the source performance came back to the level achieved previously with 9.2 GHz in the first stage. The reduced performance at 6.4 GHz in both stages may have been a result of the lower frequency, or simply that the new system was not fully optimized in the short time available.

The source performance for a wide range of elements is summarized in Tables 2 and 3. These currents represent the "typical best" results from the source, but except for the very highest charge states, the currents attained during regular operation are usually at

least 80% of these values. Special tuning is required to achieve the currents listed for beams such as O^{8+} and Ar^{14+}. The heaviest element tested was ^{209}Bi, which is mono-isotopic and has a vapor pressure dependence on temperature similar to Ca. This makes it an ideal element for use with the LBL ECR oven.[2] The highest charge state identified was $^{209}Bi^{34+}$ which had an intensity of 50 enA.

Two improvements to the ECR source and the injection beam line have been made which make regular operation easier and more reliable. The gas manifold system has evolved from a two metering valve system feeding the first stage into a much more flexible system which is shown schematically in Fig. 2. With this system gas can be injected into either the first or second stage using any one of 4 leak valves. The manual three way valves in the local gas panel provide switching of source gases between first and second stage and a hard shut off for leak valves not in use. The Swagelock quick connectors allow easy switching of source gas to the desired leak valve. Three of the leak valves are Porter Instruments diaphragm valves and one is a double needle valve system, which is used for corrosive gases and regulation of very low flows required when feeding gas into the second stage of the ECR source.

A beam attenuator system was built and installed in front of the 90° analyzing magnet on the injection beam line.[3,4] It is a device for inserting attenuating meshes in the beam to reduce the intensity uniformly across the beam cross section. It consists of a set of six meshes of different transmission which can be independently inserted by remote controlled air cylinder drives. The attenuation factors are approximately 2, 4, 11, 150, 400, and 800 so that the beam can be reduced by factors of 1/2 down to 1 part in $4\ 10^9$. This device is extremely useful for groups studying single event upsets in computer chips[5], where the experimenters frequently need rapid changes in the beam intensity from the cyclotron. It is also used to reduce the beam intensity during the tuning of the external beam transport system to avoid damage to phosphors. This is particularly useful for doing optics on high intensity (several μA) beams. Before the attenuator was installed the beam intensity was controlled by detuning the injection beam line, but this method required much more time and occasionally lead to operator errors.

Technical Issues

Several tests involving modification of the LBL ECR were done during the last year even though the operating requirements placed on it by the nuclear physics program with the cyclotron and various atomic physics experiments limited the opportunities for source experimentation.

One question which has been examined is what effect does the geometry of the plasma chamber and the location of the RF feed have on the coupling of microwave power to the plasma. Experiments with the LBL ECR[6] and later with the RT-ECR[7] and OCTOPUS[8] indicated that injecting the second stage microwave power in radially yielded less stable operation than feeding it in on axis or at least parallel to the axis. Early in the development of the LBL ECR, when the microwave power was still injected radially, the open sextupole was covered with a copper mesh to confine the microwaves to the plasma region. This basic design was continued as the source evolved from the small sextupole, to the octupole, to axial microwave feed and finally to the large sextupole. As a result of a decrease in high charge state performance on the LBL ECR in the fall of 1986 (O^{7+} current dropped from 14 eμA to 6 eμA), a series of changes were made to the sextupole screens in an attempt to improve performance. First the copper wire screens shown in Fig. 3 were replaced with screens made from perforated copper sheets. These were much more rigid and made better contact with the copper sleeves of the sextupole structure. The idea was that this would make a better more stable microwave cavity. After a few weeks of operation, it was clear that the performance was not significantly altered by the change. The source was still difficult to tune and the high charge state performance was still down. Then we removed the screens entirely and found that the source performance was largely unaffected. The only noticeable change was that about 50% more microwave power was needed.

An increase in the plasma chamber diameter from a minimum diameter of 7.8 cm to 9 cm, that was done initially to accommodate an octupole rather than a sextupole did make a significant improvement in source performance as has been reported earlier.[9] A large sextupole with a diameter of 9 cm was tested and found to perform as well as the octupole. This demonstrated that the improvement was due to the change in diameter. This modest change in diameter resulted in a factor of 2 higher currents for intermediate charge states such as Ar^{8+} and an order of magnitude for high charge states such as Ar^{12+}. These gains were probably due to improved coupling of the 6.4 GHz microwave power to the plasma. In Table 4, the circular waveguide modes are given as a function of the minimum diameter to wavelength (D/λ) for which they can propagate in vacuum. The small sextupole D/λ is 1.66 (7 propagating modes) and for the large sextupole it is 1.92 (10 propagating modes). These geometries are in the transition between a few modes in the waveguide to a highly overmoded waveguide. Increasing D/λ to larger values (≥ 4) as was done on OCTOPUS[10] and RT-ECR[11] does not appear to have resulted in a further improvement to the charge state distribution, although it made source tuning broader and less sensitive to changes in the magnetic field.[12]

So while increasing the diameter of the plasma chamber in the LBL ECR improved its performance, eliminating the screens between the bars had very little effect. This indicates that the location of the cavity walls determines which waveguide modes can be excited, but the Q of the cavity is dominated by the adsorption of microwaves by the plasma.

The high charge state performance of the LBL ECR particularly for ions such as O^{7+} and O^{8+} is strongly influenced by coatings or the lack of coatings on the surface of the plasma chamber walls. In particular, a significant enhancement in the performance was observed after the source is used to produce Si beams. The Si beams were produced by injecting SiH_4 into the plasma chamber while running an oxygen plasma in the first stage. This combination (SiH_4, O_2, and a microwave plasma) is used in the semiconductor industry to make plasma depositions of SiO_2. Measurements on an ECR plasma deposition apparatus show a deposition rate of about 40 nm/min at a pressure of $2x10^{-4}$ Torr.[9] The LBL ECR plasma chamber operates at a pressure of about $6x10^{-7}$ Torr when producing Si beams. If the deposition rate is proportional to pressure, this implies a deposition rate of about 0.1 nm/min. A typical 50 hour long run would deposit a 300 nm layer of SiO_2. To date, the evidence indicating this type of coating is takes place comes from two observations. First, there is a significant change in the source tuning characteristics and performance after running Si beams. Second, the presence of copper in the charge state distribution is reduced by at least 2 orders of magnitude following a Si run.

The improvement in source performance after running Si is most noticeable when tuning high charge state oxygen beams (O^{7+} or O^{8+}). For example in July 1987 after 16 months without running Si, the best O^{7+} current was 6 eμA. At the end of July, Si was run for 7 days after which the O^{7+} current had increased to 12 eμA. The optimum tuning parameters also changed dramatically as a result of the Si. Before running Si, the best O^{7+} performance required adding a significant amount of He mixing gas into the second stage. After running Si, adding helium no longer increased the current and the best performance was achieved using only oxygen. Other changes included improved short and long term stability, reduced reflected power, and the possibility of operating at lower pressure ($3x10^{-7}$ Torr vs $8x10^{-7}$ Torr) and higher power. This "silicon effect" has been observed on at least 3 occasions since regular operation began. Although the effect of running Si in the source after a long period of operation without Si is dramatic, the slow decay of performance afterwards is less obvious. The lifetime of the coating under our normal operating conditions (about 120 hours/wk) appears to be on the order of 3 to 6 months. After a Si run in March 1986, the source performance remained excellent until in September when it began to be more difficult to get peak performance. Although the intensities

remained adequate for the nuclear physics program, the source tuning became more difficult and frequently required adding helium as a mixing gas. This behavior continued until Si was run in the source during the normal course of cyclotron operation. After reviewing the records of charge state distributions and source parameters , it is clear that a similar pattern occurred over a 5 month period in 1985.

Now that the "silicon effect" has been observed, the question is what is the mechanism which causes it. The model proposed here is that the SiO_2 layer leads to an enhanced source of cold electrons, which help stabilize the plasma against microinstabilities. In Table 5, the maximum secondary emission coefficient δ_{max} are listed for a number of common metal and oxides[13] including SiO_2, Cu, and CuO_2. The maximum secondary emission coefficient for SiO_2 is 2 to 4. That is considerably higher than Cu or CuO_2 which should be present when the source is clean. In this model we assume that the limit to lowering the neutral pressure and raising the microwave power for the production of high charge state ions is set by microinstabilities in the plasma. The presence of microinstabilities couples power into the ions decreasing their confinement time. Increasing the supply of cold electrons by enhancing the secondary emission at the wall should help stabilize it since microinstabilities are caused by irregularities in the electron temperature distribution.[14] This model is consistent with the observation that the LBL ECR is usually less stable just after running C, Fe, and Nb which have relatively low secondary emission coefficients.

One other possibility is that coating the wall with an insulator (SiO_2) could modify the plasma potentials in the source, thereby modifying ion confinement times. Less probable is that the charge exchange between the wall and ions is suppressed by the coating. The suppression of the copper background in the plasma also will improve the production of high charge states (inverse gas mixing effect), but the copper background seems too small to significantly affect the oxygen charge state distribution. Further investigation of this effect is necessary before the mechanism can be clarified.

Conclusion

The LBL ECR source, like other ECR source operating with cyclotrons, has proved to be a very flexible and remarkably reliable device. By studying its performance over extended periods of operation, it is possible to observe subtle effects such as the "silicon effect." In one sense the infrequent breakdowns afford a chance to make alterations and explore their effect on source performance.

References

1.We are grateful to Ian Brown for making this klystron available.
2. C.M. Lyneis, "Contributed Papers of the 7th International Workshop on ECR Ion Sources," Jülich, May 1986,(pub. KFA-Jülich) p. 1 and LBL-21579.
3. Designed by D.J. Clark (to be published)
4. Funded by Aerospace Corporation
5. J.N. Bisgrove, J.E. Lynch, P.J. McNulty, W.G. Abdel-Kader, V. Kletnieks, and W.A. Kolasinski, IEEE Trans Nucl. Sci. NS-33, p 1577 (1986)
6. C.M. Lyneis and D.J. Clark, IEEE Trans NS-32, 1745 (1985)
7. T.A. Antaya private communication
8. Y. Jongen, private communication
9. C.M. Lyneis, " Proceedings of the 6th International Workshop on ECR Sources," Berkeley, January 1985, (LBL PUBL-5143), p. 51
10. A. Chevalier and Y Jongen, "Contributed Papers of the 7th International Workshop on ECR Ion Sources," Jülich, May 1986,(pub. KFA-Jülich) p. 124
11. T.A. Antaya and Z.Q. Xie, "Contributed Papers of the 7th International Workshop on ECR Ion Sources," Jülich, May 1986,(pub. KFA-Jülich) p. 72
12. T.A. Antaya, private communication
13. N.R. Whetten, Methods of Experimental Physics, Vol IV, (Academic Press), 1962
14. R.C. Garner, "Electron Microinstabilities in an ECRH Mirror-confined Plasma," Internal Report MIT Plasma Center PFC/RR-86-23 (1986)

*This work was supported by the Director, Office of Energy Research, Division of Nuclear Physics of the Office of High Energy and Nuclear Physics and by Nuclear Sciences of the Basic Energy Sciences Program of the U.S. Department of Energy under Contract DE AC03-76SF00098.

Table 1

LBL ECR Source Parameters

Parameter	Maximum	Typical
Magnetic field		
On axis	4.2 kG	3.5 kG
Mirror Ratio	1.3-2.0	1.6
Sextupole at wall	3.1 kG	2.7 kG
Magnet power	110 kW	30 kW
Microwave Power		
Injector at 10.3 GHz	1.0 kW	0.150 kW
Main Stage 6.4 GHz	3.0 kW	0.300 kW
Vacuum	Base	Typical
Injector (ECR zone)	$1x10^{-7}$ Torr	$3x10^{-4}$ Torr
Injector Vacuum Chamber	$1x10^{-7}$ Torr	$8x10^{-6}$ Torr
Main Stage	$<1x10^{-7}$ Torr	$6x10^{-7}$ Torr
Extraction	$<1x10^{-7}$ Torr	$<1x10^{-7}$Torr
Extraction Geometry		
Plasma Electrode Hole	8 mm dia	8 mm dia
Puller Hole	10 mm dia	10 mm dia
Gap	10-35 mm	30 mm

Table 2

Currents for the LBL ECR: Hydrogen through Silicon

Q	^{1}H	^{3}He	^{12}C	^{14}N	^{16}O	^{19}F	^{20}Ne	^{24}Mg	^{28}Si
1^+	300	300	27	82	118				
2^+		200	37	117	143	43	51	32	20
3^+			*	106	152	55	63	34	33
4^+			31	110	*	53	78	28	69
5^+			6.5	93	96	37	58	44	72
6^+				19	82	17	45	34	47
7^+					14	11	21	18	30
8^+					0.95	1	11	8	17
9^+						0.05	1.1	6.3	7
10^+							0.04	2.2	2.7
11^+								0.1	0.5
12^+									0.2

All currents in eμA measured at 10 kV extraction voltage.
* Indicates not measured because a mixture of two ions with identical charge to mass ratios were present.
Natural isotopic abundance source feeds were used except for ^{3}He and $^{22}Ne^{10+}$.

Table 3

Currents for the LBL ECR: Sulfur through Bismuth

Q	^{32}S	^{39}K	^{40}Ar	^{40}Ca	^{48}Ti	^{84}Kr	^{127}I	^{129}Xe	^{209}Bi
3^+	10	4	38	23					
4^+	*	4.5	82	24					
5^+	20	5	*	*					
6^+	*	8.5	60	37		9			
7^+	63	11	66	38	2.4	12			
8^+	*	18	106	36	*	22			
9^+	36	37	72	31	12	25		4.1	
10^+	*	22	*	*	10	22	4.2	4.7	
11^+	5	12	18	22	8	19	4.9	5.1	
12^+	*	2.4	13	11	*	*	5.7	5.2	
13^+	.4		5	3.2	1	21	7.5	5.2	
14^+	*		1.4	1.1		*	8.5	5	
15^+	.001		*	*		16	11	4.3	
16^+			0.03	0.03		8	*	4.6	
17^+						7	12	4.3	
18^+						*	15	4.4	
19^+						2	15	4.8	
20^+						0.9	14	4.8	
21^+						*	*	4	2.2
22^+						0.1	11	3.	2.6
23^+							10	3.	3.1
24^+							8.3	2.	3.7
25^+							5.6	2	3.6
26^+							2.1	1.	*
27^+							0.83	0.3	3
28^+							0.2		2.5
29^+							0.05		1.6
30^+							0.009		*
31^+									0.56
32^+									0.26
33^+									0.1
34^+									0.05

All currents in eμA measured at 10 kV extraction voltage.
* Indicates not measured because a mixture of two ions with identical charge to mass ratios were present.
Natural isotopic abundance source feeds were used.

Table 4

Minimum diameter to wavelength for propagation of circular waveguide modes

Mode	D/λ	Mode	D/λ
$TE_{1,1}$	0.586	$TM_{3,1}$	2.031
$TM_{0,1}$	0.786	$TE_{5,1}$	2.042
$TE_{2,1}$	0.972	$TE_{2,2}$	2.135
$TE_{0,1}$	1.219	$TM_{1,2}$	2.233
$TM_{1,1}$	1.219	$TE_{6,1}$	2.388
$TE_{3,1}$	1.337	$TM_{4,1}$	2.415
$TM_{2,1}$	1.635	$TE_{3,2}$	2.552
$TE_{4,1}$	1.695	$TE_{1,3}$	2.717
$TE_{1,2}$	1.697	$TM_{0,3}$	2.755
$TM_{0,2}$	1.757		

Table 5

Maximum secondary emission yield for various elements and compounds[13]

Element	δ_{max}	Compound	δ_{max}
C (graphite)	1.0	CaO	2.2
(soot)	0.45	CuO_2	1.2
Cu	1.3	SiO_2	2.1 to 4
Fe	1.3		
Mg	0.95		
Nb	1.2		
Ni	1.3		
Si	1.1		
Ta	1.3		

LBL ECR

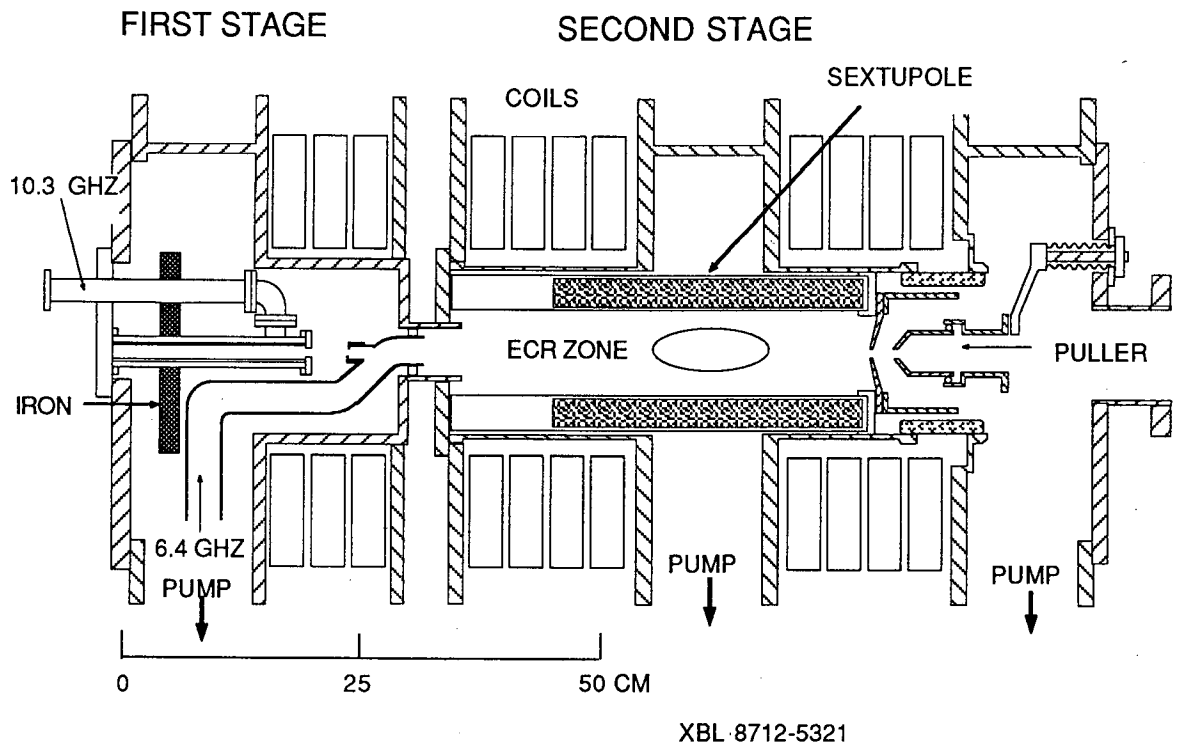

Fig. 1. Elevation view of the LBL ECR.

Gas Handling System for the LBL ECR

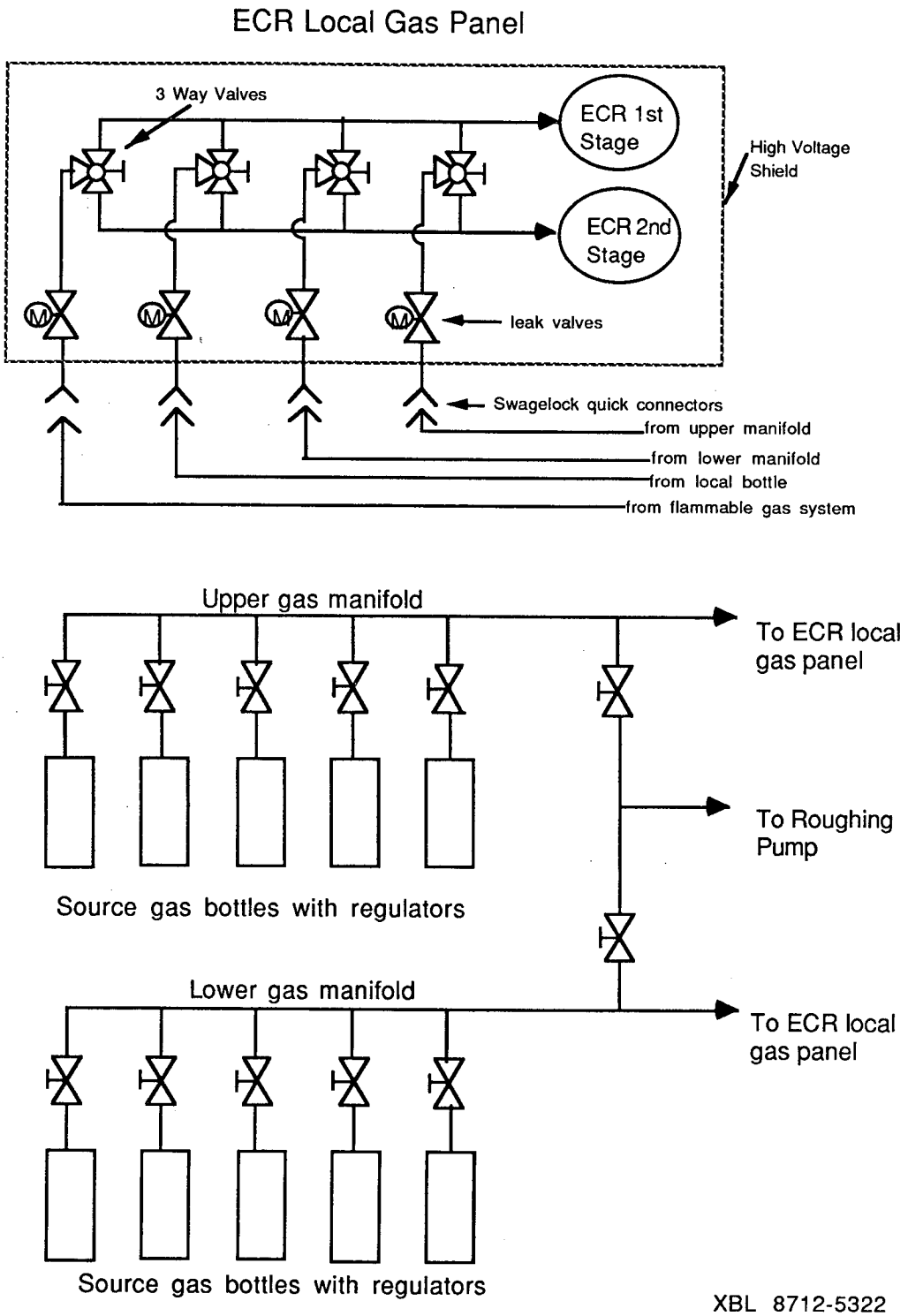

Fig. 2. Schematic of the gas handling system for the LBL ECR. It is designed for flexibility and to make rapid changes possible.

Plasma Chamber Geometry for the LBL ECR

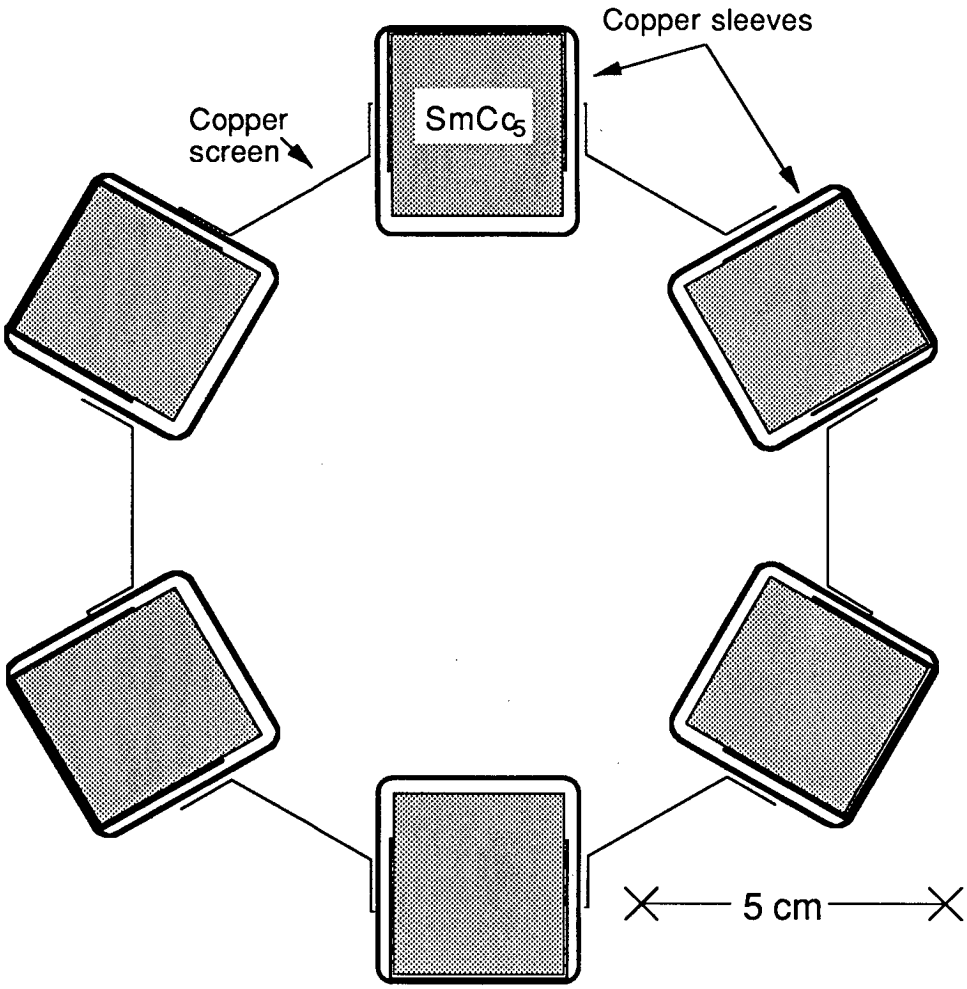

XBL 8712-5323

Fig. 3. A cross sectional view of the the plasma chamber in the LBL ECR. It is presently operating without the copper screens shown here between the bars.

LAWRENCE BERKELEY LABORATORY
TECHNICAL INFORMATION DEPARTMENT
UNIVERSITY OF CALIFORNIA
BERKELEY, CALIFORNIA 94720