LBL-23988 c.2

Lawrence Berkeley Laboratory
UNIVERSITY OF CALIFORNIA

RECEIVED
LAWRENCE
BERKELEY LABORATORY

MAY 10 1988

LIBRARY AND
DOCUMENTS SECTION

Microprocessor-Controlled Personal Dosimeter for Recording Low-Intensity, Power-Frequency Magnetic Fields

T.S. Tenforde

August 1987

TWO-WEEK LOAN COPY

This is a Library Circulating Copy which may be borrowed for two weeks.

Donner Laboratory
Biology & Medicine Division

Prepared for the U.S. Department of Energy under Contract DE-AC03-76SF00098

LBL-23988 c.2

DISCLAIMER

This document was prepared as an account of work sponsored by the United States Government. While this document is believed to contain correct information, neither the United States Government nor any agency thereof, nor the Regents of the University of California, nor any of their employees, makes any warranty, express or implied, or assumes any legal responsibility for the accuracy, completeness, or usefulness of any information, apparatus, product, or process disclosed, or represents that its use would not infringe privately owned rights. Reference herein to any specific commercial product, process, or service by its trade name, trademark, manufacturer, or otherwise, does not necessarily constitute or imply its endorsement, recommendation, or favoring by the United States Government or any agency thereof, or the Regents of the University of California. The views and opinions of authors expressed herein do not necessarily state or reflect those of the United States Government or any agency thereof or the Regents of the University of California.

LBL-23988

MICROPROCESSOR-CONTROLLED PERSONAL DOSIMETER FOR RECORDING LOW-INTENSITY, POWER-FREQUENCY MAGNETIC FIELDS

Thomas S. Tenforde

Research Medicine & Radiation Biophysics Division
Lawrence Berkeley Laboratory
University of California
Berkeley, California 94720

August, 1987

Final report prepared for the Radiation Studies Program of the Environmental Assessment Department, Electric Power Research Institute, Palo Alto, CA, under Contract RP799-21 with the Lawrence Berkeley Laboratory.

This work was supported by the Electric Power Research Institute and the U.S. Department of Energy under Contract DE-AC03-76SF00098.

ABSTRACT

A portable dosimeter has been developed for monitoring human exposure to power-frequency magnetic fields in residential and occupational environments. This microprocessor-controlled dosimeter has been designed to measure 60-Hz field intensities from 20 μG to 600 mG (r.m.s. values), thereby covering the broad range of field levels generally encountered in households and occupational settings. Field detection is accomplished by three orthogonal 500-turn coils, each of which is enclosed in a copper chamber to provide shielding from ambient electric fields. A digitized resolution of 2.5 μG is provided in the 20 μG to 10 mG range, and 150 μG resolution in the 10 mG to 600 mG range. A bench-mounted HP85 computer is used to initialize the data acquisition program during start-up of the portable dosimeter. The HP85 also retrieves data from the random-access memory through an RS-232-C serial interface when the field monitoring is completed. Calibration tests have demonstrated that linearity of the dosimeter's detection system is within 2% over the field range of 50 μG to 600 mG. Contamination of the main 60-Hz signal by harmonics was found to be less than 1%. Tests of the dosimeter's performance in an electronics laboratory, a 230-kV substation, and a residential environment have demonstrated that it meets the original design specifications. Several design improvements that would reduce the dosimeter's physical size and extend its versatility for long-term field monitoring are discussed.

ACKNOWLEDGMENTS

The author wishes to thank C.C. Lo, T.Y. Fujita and A.B. Geyer for their skillful efforts in developing the hardware and software for the 60-Hz magnetic field dosimeter. The cooperation of Dr. T. Dan Bracken in testing the dosimeter and providing a written summary of his results is also gratefully acknowledged.

This project was carried out under Contract No. RP 799-21 awarded by the Electric Power Research Institute. Funding for magnetic field research in the author's laboratory is also received from the U.S. Department of Energy (Office of Energy Research, Health and Environmental Research Division) under Contract No. DE-AC03-76SF00098 with the Lawrence Berkeley Laboratory.

CONTENTS

Section		Page
1	INTRODUCTION	1-1
2	DOSIMETER DESIGN	2-1
3	LABORATORY AND FIELD TESTS	3-1
4	FUTURE DOSIMETER DESIGN FEATURES	4-1
5	CONCLUSIONS	5-1
6	REFERENCES	6-1
APPENDIXES		
A	IEEE TRANSACTIONS ON NUCLEAR SCIENCE, VOL. 33, NO. 1, PP. 643-646 (1986): "A WIDE DYNAMIC RANGE PORTABLE 60-HZ MAGNETIC DOSIMETER WITH DATA ACQUISITION CAPABILITIES" by C.C. Lo, T.Y. Fujita, A.B. Geyer and T.S. Tenforde	A-1
B	OPERATION INSTRUCTIONS FOR THE 60-HZ MAGNETIC FIELD DOSIMETER AND HP -85 COMPUTER	B-1

ILLUSTRATIONS

Figure		Page
2-1	60-Hz Magnetic Field Dosimeter Operational Schematic	2-2
2-2	60-Hz Magnetic Field Dosimeter Components	2-3
2-3	60-Hz Magnetic Field Dosimeter	2-5
3-1	Detector Buffer Amplifier Output	3-2
3-2	Harmonic Rejection Performance	3-3
3-3	High-Field Test of 60-Hz Magnetic Field Dosimeter	3-4
3-4	Low-Field Test of 60-Hz Magnetic Field Dosimeter	3-5
3-5	Field Test of the 60-Hz Dosimeter in a Laboratory	3-6
3-6	Histogram Representation of Laboratory Exposure Data	3-8
3-7	Field Test of the 60-Hz Dosimeter in a Private Residence	3-9
3-8	Histogram Representation of Residential Exposure Data	3-10

TABLES

Table		Page
1-1	60-Hz Magnetic Field Dosimeter	1-2
3-1	60-Hz Magnetic Field Exposures Recorded during a Walk-Through of a 230-kV Substation	3-12

Section 1
INTRODUCTION

An increased interest in the health effects of power-frequency magnetic fields has resulted from recent epidemiological reports which indicate that an increased risk of cancer, primarily leukemia, may be associated with exposure to elevated field levels in both residential and occupational settings (1 - 3). A major deficiency in these epidemiological studies was the failure, in nearly all cases, to use quantitative dosimetry procedures for characterizing the magnetic field exposure levels. For that reason a program was undertaken to develop a compact, battery-operated dosimeter that can be used for extended recording of the power-frequency magnetic field levels encountered by individuals in both residential and industrial environments.

Several studies have been made of the 60-Hz magnetic field levels to which humans are routinely exposed in the residential and occupational environments. Values of the magnetic field strength range from 50 μG to 150 mG within households and businesses, although field levels are generally less than 10 mG (4 - 7). Relatively large magnetic fields are present near the surfaces of rotating machinery and certain household appliances, with field levels exceeding 1 G at distances less than 6 inches from the surface (4). In the vicinity of high-voltage transmission lines, fields up to 330 mG are present at ground level within the right-of-way (8, 9). Because of the broad range of 60-Hz magnetic field levels to which humans are exposed, the portable dosimeter described in this report was designed to have a wide dynamic range from 20 μG to 600 mG.

The general design features of the dosimeter that were established at the beginning of the project are listed in Table 1-1. The prototype model that was developed utilizes three orthogonal, 500-turn copper loops for signal detection. A phase-lock loop and synchronous detector are used for processing the signals acquired on each of the three axes, and narrow bandpass filtration is provided to give a precise recording of the 60-Hz signals with minimal contamination by harmonics. The battery-operated dosimeter is microprocessor controlled and contains 1024 12-bit words of read-only memory (ROM) and 3072 words of random-access memory (RAM). The data acquisition and storage system used in the 60-Hz dosimeter incorporates many of the hardware and software features that were previously developed for a static magnetic field personal dosimeter that was designed and fabricated in our laboratory (10). In this report the design features of the 60-Hz magnetic field

Table 1-1

60-Hz MAGNETIC FIELD DOSIMETER

GENERAL REQUIREMENTS:

- Portable unit -- easily worn on different parts of the body
- Three-axis, 500-turn coils for recording B_x, B_y, B_z
- Provide exposure log of r.m.s. field intensities over preset storage interval [B_x, B_y, B_z, and $|B|^2$]
- Provide exposure log of peak values in storage interval

OPERATING RANGE:

- 20 microgauss to 600 milligauss [30,000 to 1 range span]

OPERATING LIFE:

- Continuous operation for a minimum of 9 hours

DATA RECORDING AND GRAPHICS:

- Serial interface to bench-mounted readout unit for serial data storage and printout/graphics
- Readout unit performs square-root operation to obtain $|B|$ and integrates to obtain $\int |B| dt$

---

dosimeter are described in detail, and the results of tests on the dosimeter's performance in laboratory, occupational and residential environments are presented.

Section 2
DOSIMETER DESIGN

Figure 2-1 provides a flow chart of the signal recording and data processing operations performed by the 60-Hz magnetic field dosimeter. A schematic diagram of the principal components of the dosimeter is shown in Figure 2-2. Field detection is accomplished by three 500-turn copper coils, which are arranged along orthogonal axes to monitor the x, y and z components of 60-Hz ambient magnetic fields. Since the coils are also sensitive to electric fields, they are shielded within individual copper chambers. The signal output of each coil is amplified by two 60-Hz bandpass preamplifiers in cascade. At field levels of 10 mG or lower, the total gain of the two active filters is set at 10,000 so that a 50 μG field will yield a 3.4 mV signal and a 10 mG field will yield a signal of 680 mV at the output of the second active filter. When the field being monitored exceeds 10 mG, the total gain of the two active filters is automatically decreased to 165. A 20 mG field will thus yield a 22.4 mV signal and a 500 mG field will yield a 560 mV signal at the output of the second active filter.

The second active filter supplies amplified signals to a phase-lock loop (PLL) and synchronous detector. The PLL phase locks with the incoming signal and produces a quadrature voltage-controlled oscillator (VCO) output that is in phase with the incoming signal. The quadrature VCO output is then used as the demodulating signal for the synchronous detector. The demodulated output is passed through a low-pass filter suppressing all harmonics except the DC component, which is determined only by the amplitude of the incoming 60-Hz magnetic field. The DC output of the synchronous detector is amplified to be compatible with the 0 - 5 V range of the analog-to-digital converter (ADC) in the data acquisition section of the dosimeter. The amplified detector output and a comparator circuit are used for automatic ranging between the high-gain (10,000) and low-gain (165) signal processing modes, which are used in the 20-μG to 10-mG and 10-mG to 600-mG field ranges, respectively.

Three analog switches are used to transfer data to the ADC. Digitization of the signals acquired along three orthogonal axes is done sequentially. A 12-bit successive approximation ADC is used in the unipolar mode providing 150 μG/bit and 2.5 μG/bit in the low-gain and high-gain modes, respectively. A programmable interface element interfaces the ADC and the universal asynchronous receiver-transmitter (UART) used for serial data transmission to an Intersil IM6100IPL microprocessor. The

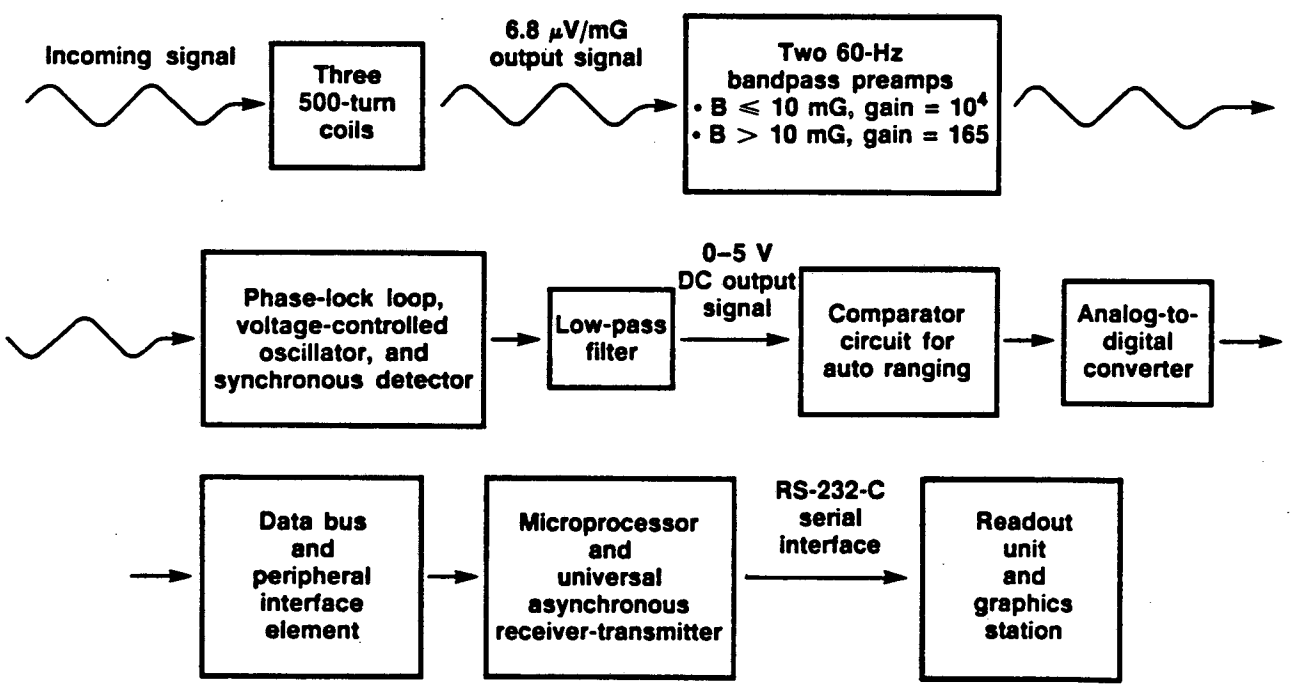

Figure 2-1. 60-Hz Magnetic Field Dosimeter Operational Schematic

Schematic diagram of the operational features of the portable 60-Hz magnetic field dosimeter developed at the Lawrence Berkeley Laboratory. [XBL8510-8523]

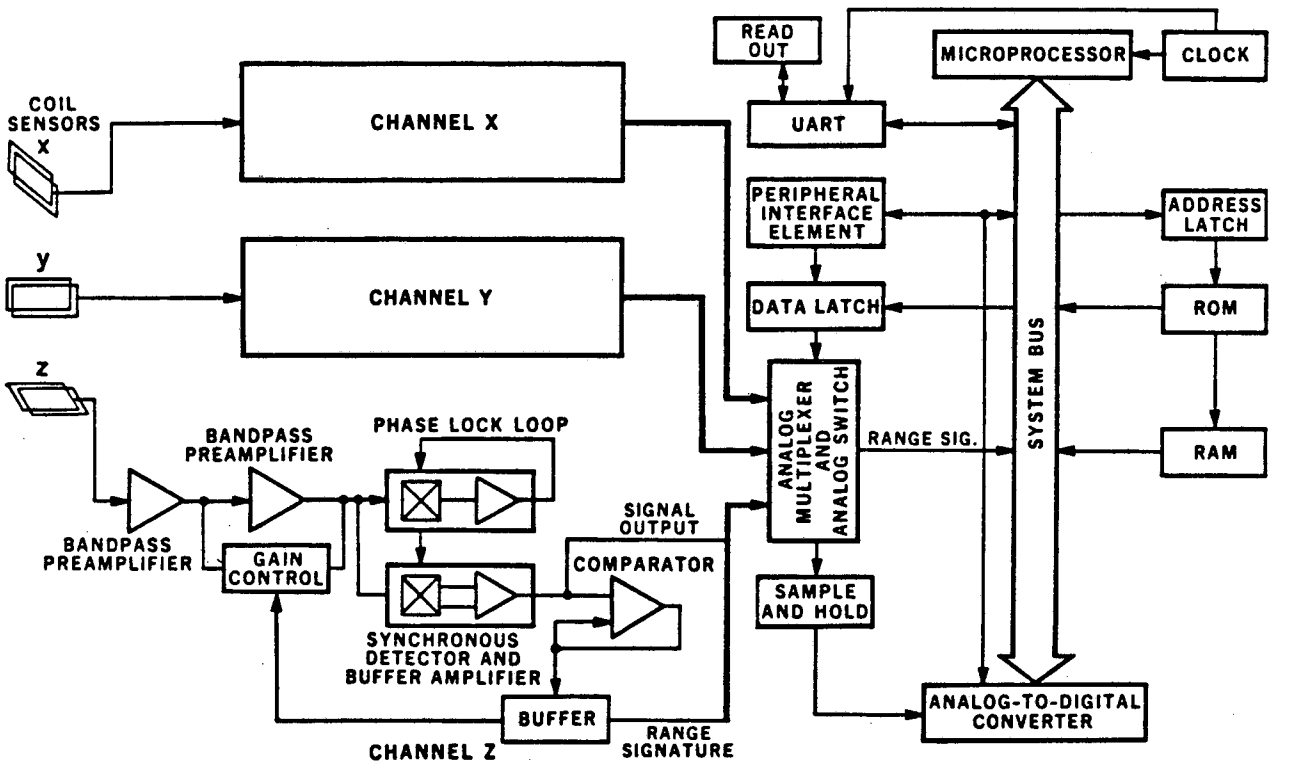

Figure 2-2. 60-Hz Magnetic Field Dosimeter Components

Block diagram showing the major components of the portable 60-Hz magnetic field dosimeter. [XBL8510-4191]

UART interfaces the microprocessor with a Hewlett-Packard HP85 computer that is used for initialization and data readout.

A detailed description of the dosimeter's design features was published in IEEE Transactions in Nuclear Science 33(1): 643-646 (1986), and a reprint of this paper is included as Appendix A. A set of operating instructions for the dosimeter and the HP85 readout station are given in Appendix B.

Photographs of the dosimeter and its six circuit boards are shown in Figure 2-3. The dimensions of the dosimeter are 3.625 inches (width) x 2.25 inches (depth) x 6.125 inches (height), and its total weight including three 3.9-Volt lithium batteries is 0.67 kilogram. The weight of the 60-Hz dosimeter is therefore 2.9 times greater than that of the static magnetic field dosimeter that was previously developed in our laboratory (10). This difference in weight is primarily associated with the fact that field detection by the static magnetic field dosimeter is accomplished with miniature thin-film Hall sensors, whereas the 60-Hz dosimeter uses 500-turn coils and synchronous phase-lock loop detection circuits that are considerably more bulky. However, the signal output of the coil detectors is approximately 500 times larger than that of the thin-film Hall sensors, and this increase in sensitivity was deemed necessary in order to provide accurate recordings of 60-Hz magnetic fields with amplitudes less than 10 mG.

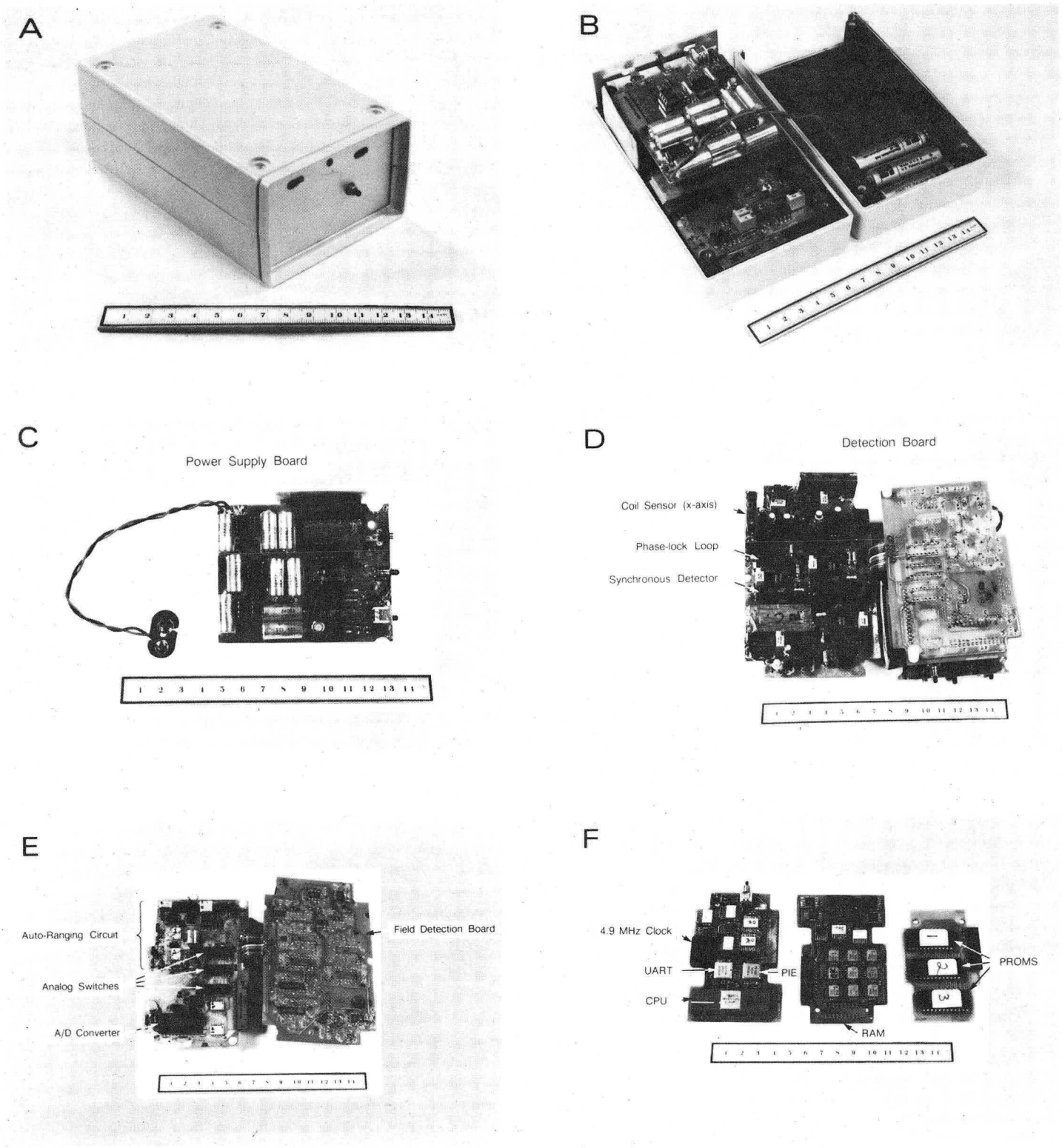

Figure 2-3. 60-Hz Magnetic Field Dosimeter

Photographs of the portable 60-Hz magnetic field dosimeter and its six circuit boards. The battery pack is attached to the inner surface of the top cover, as shown in panel (B). [XBB860-9674]

Section 3
LABORATORY AND FIELD TESTS

Calibration tests for the dosimeter's detection circuitry were carried out with a standard coil that provided a known magnetic flux density as a function of the applied current. The coil was placed inside a Mu-metal shield to reduce the background 60-Hz magnetic field to approximately 20 μG. Linearity of the detection system was observed to be within 2% over the range of field intensities from 50 μG to 600 mG, as shown in Figure 3-1. Contamination of the main 60-Hz signal by harmonics was found to be less than 1%, as demonstrated by the data shown in Figure 3-2.

The integrated data acquisition and recording systems of the prototype 60-Hz magnetic field dosimeter were also subjected to laboratory calibration tests in both the high-field (low sensitivity) range above 10 mG, and the low-field (high sensitivity) range below 10 mG. The results of some representative tests are shown in Figures 3-3 and 3-4. In these tests the axis of the dosimeter was tilted at a 45° angle relative to the axis of the coil that produced the test field, so that the signals recorded along each of the three orthogonal axes were approximately equal. The dosimeter was not shielded from the influence of ambient 60-Hz magnetic fields during these bench tests in a laboratory environment, and consequently the peak values of the field were approximately 500 μG larger than the average fields recorded during 5-min time intervals. The square root of the sum of squares of the B_x, B_y and B_z field components agreed closely with the recorded values of B_{av}.

Limited field tests of the 60-Hz magnetic field dosimeter's performance were also carried out in an electronics laboratory at the Lawrence Berkeley Laboratory and in a private residence in El Cerrito, California. The results of a 4-hour test in an electronics laboratory at LBL Building 29 are shown in Figure 3-5. The dosimeter was worn on the belt near the right hip of an electrical engineer during this test, with the y-axis of the dosimeter recording the vertical field component. The z-axis coil recorded the horizontal field component perpendicular to the body surface, and the x-axis coil recorded the tangential field component parallel to the body surface in the horizontal plane. During the portions of the 4-hour test when the engineer was located in the electronics laboratory, the average field level ranged from 200 μG to 2 mG, with peak field levels reaching 15 mG. Lower

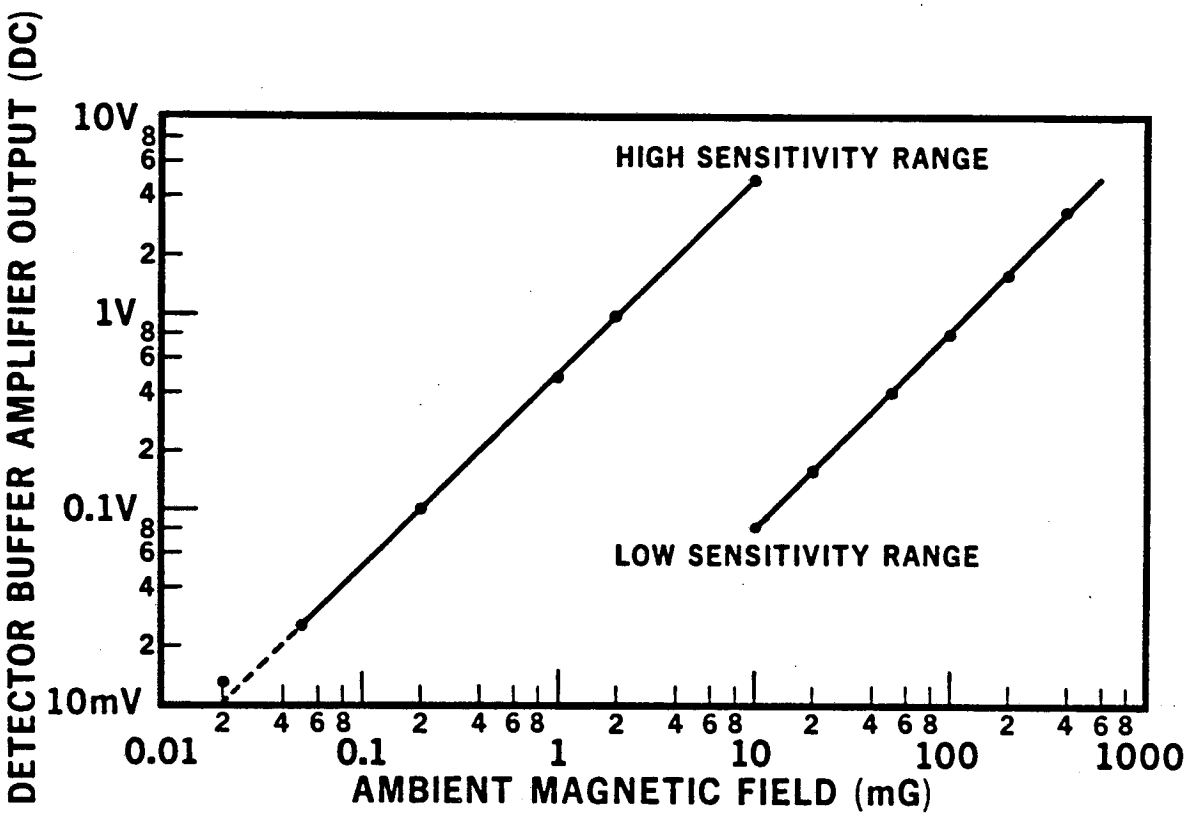

Figure 3-1. Detector Buffer Amplifier Output

The amplified detector output in the 60-Hz magnetic field dosimeter is plotted as a function of magnetic flux density in a calibrated Helmholtz coil. Separate plots are shown for the high-gain and low-gain field ranges (below and above 10 mG, respectively). [XBL8510-4193]

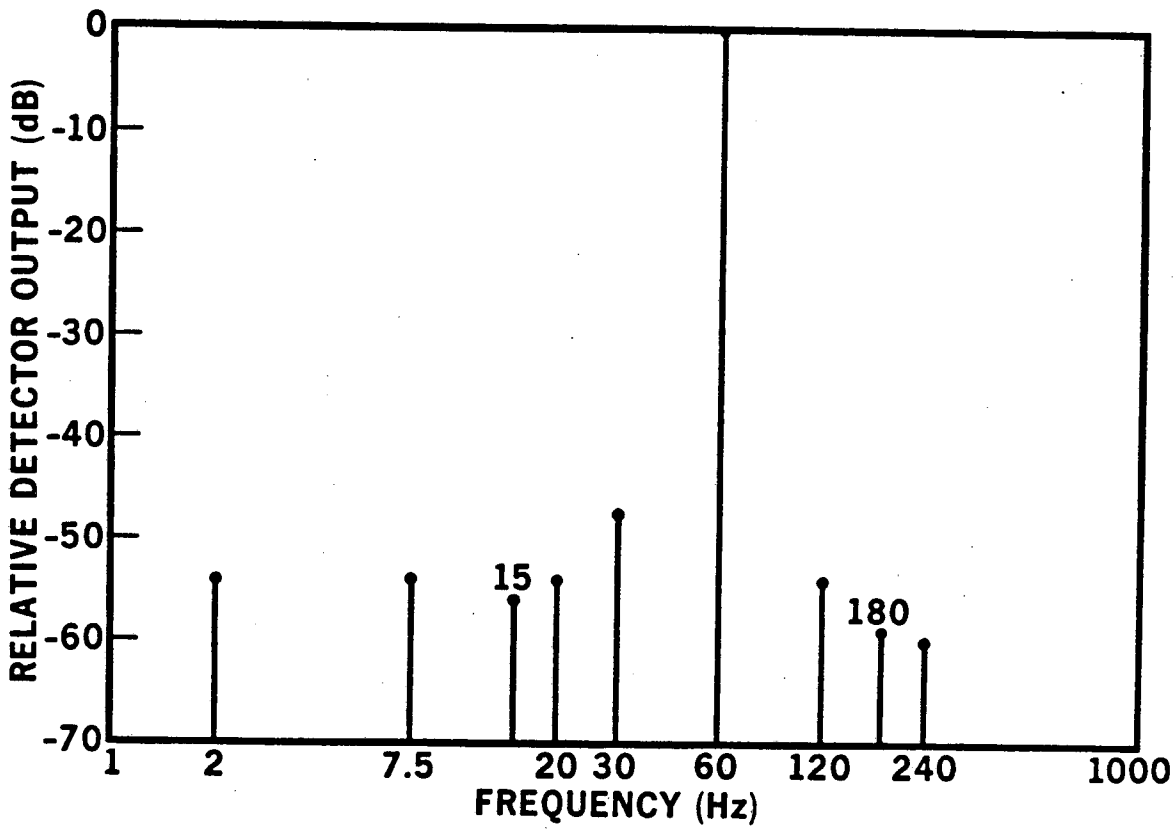

Figure 3-2. Harmonic Rejection Performance

The contribution of harmonic fields to the detector output is shown relative to the primary 60-Hz magnetic field signal. [XBL8510-4194]

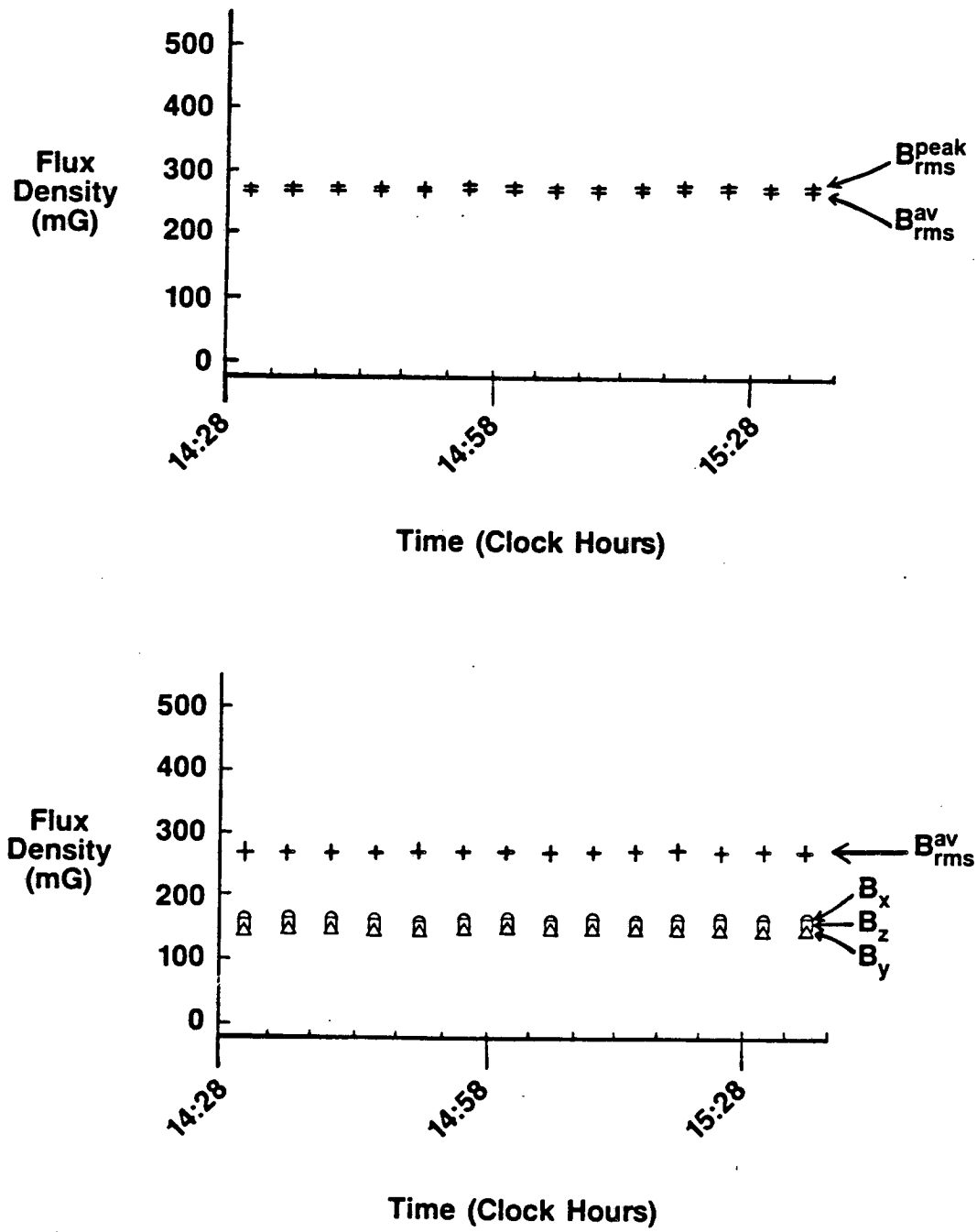

Figure 3-3. High-Field Test of 60-Hz Magnetic Field Dosimeter

The results of a bench test of the dosimeter are shown in the high-field, low-gain operational mode. [XBL8611-6489]

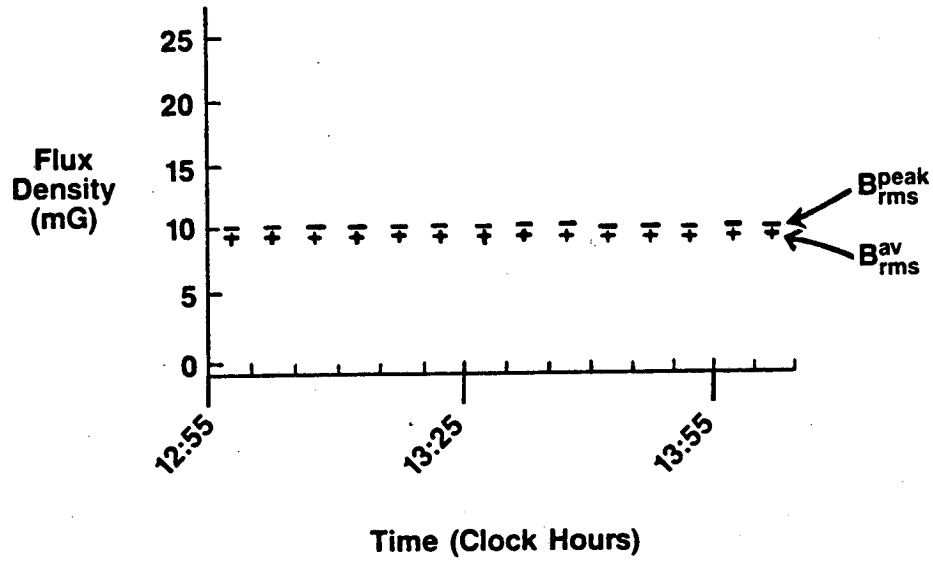

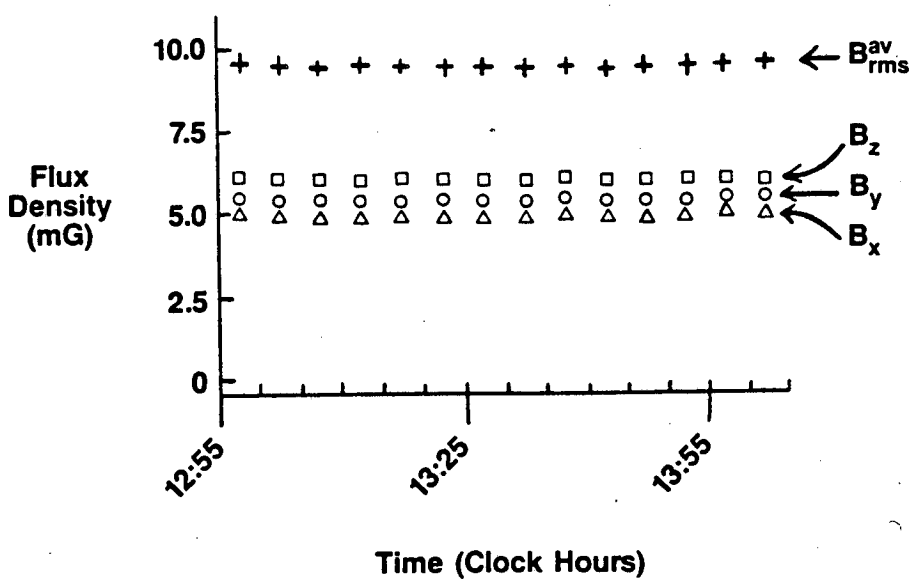

Figure 3-4. Low-Field Test of 60-Hz Magnetic Field Dosimeter

The results of a bench test of the dosimeter are shown in the low-field, high-gain operational mode. [XBL8611-6488]

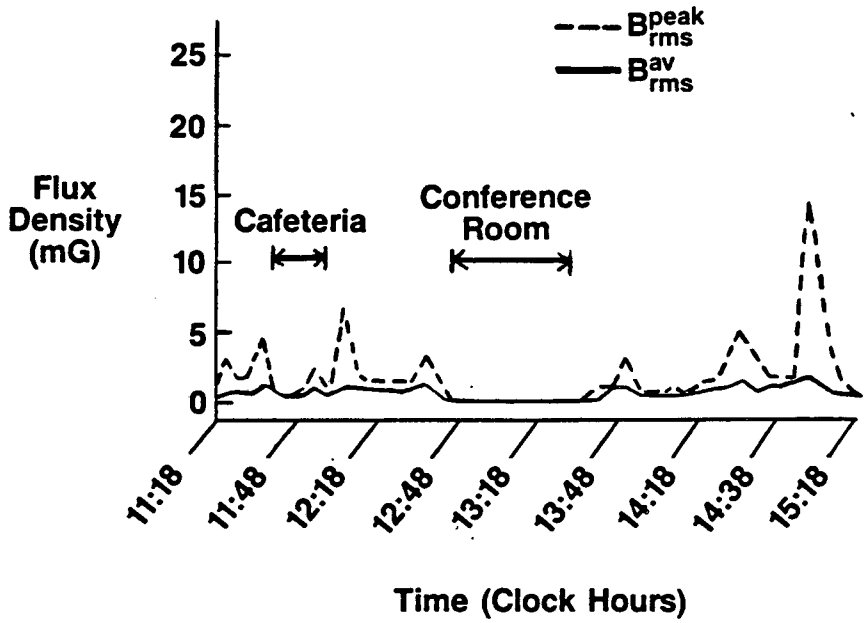

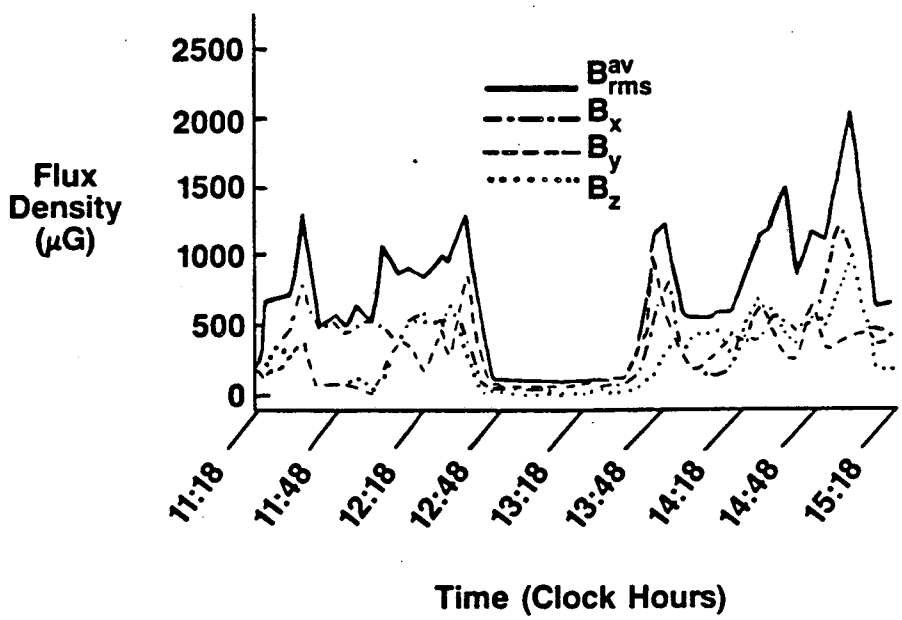

Figure 3-5. Field Test of the 60-Hz Dosimeter in a Laboratory

Results of a 4-h test of the 60-Hz magnetic field dosimeter's performance while worn on the belt of an engineer working in an electronics laboratory. The field test was performed in LBL Building 29 except for the indicated period spent in the LBL cafeteria. [XBL8611-6491]

field levels were recorded during a 20-min interval spent in the LBL cafeteria. Very low 60-Hz field values, less than 100 μG, were recorded during a 40-min meeting that the engineer attended in the LBL Buidling 29 conference room. Histogram representations of the percentage of time spent in average fields in the range up to 2000 μG, and peak fields ranging from 1 to 15 mG, are shown in Figure 3-6.

The results of a 4-hour field test in the home of the same electrical engineer are shown in Figures 3-7 and 3-8. In general, the average 60-Hz field levels recorded in the home environment were less than 1 mG, except in the proximity of an IBM PC/AT computer with a 20 Mbyte disk drive. Switching on the disk drive of this PC produced a large transient spike in the peak field with an intensity of 17 mG. Another large spike of approximately 10 mG intensity was recorded when a Sears washing machine was turned on. The subject walked through different rooms in the house, and the highest average field levels were recorded while he was lying on a heated waterbed during the first 20 min of the 4-hour field test, and in the kitchen during the final 20 min of the field test. The position of the subject, and hence the belt-mounted dosimeter, relative to a source of 60-Hz magnetic fields was found to have a significant influence on the recorded field levels. This fact is evident in the data of Figure 3-7, which shows a large range of recorded 60-Hz magnetic field levels during the interval when the engineer was working at his IBM PC/AT computer. Shifts in the body position relative to the PC produced significant changes in the field levels recorded on the belt-mounted dosimeter. Another feature of the data recorded in the household environment that was not observed in the laboratory field test was the fact that the B_x component of the magnetic field was consistently lower than the B_y and B_z components. This observation indicates that the 60-Hz magnetic fields emanating from sources in the home had the highest intensities in the directions facing the subject and along the vertical body axis. Fields encountered in the laboratory environment were more isotropic in their spatial distribution, as shown by the data presented in Figure 3-5.

Field tests of the LBL 60-Hz magnetic field dosimeter were also made by Dr. T. Dan Bracken at a 230-kV substation operated by the Bonneville Power Administration (BPA). The dosimeter's field calibration was first tested in a 3-turn square loop coil with 6.096 meter sides. The dosimeter was sequentially aligned with the x, y, and z axes along the field direction, and the 60-Hz magnetic field was recorded and compared with values that were either calculated or measured with other

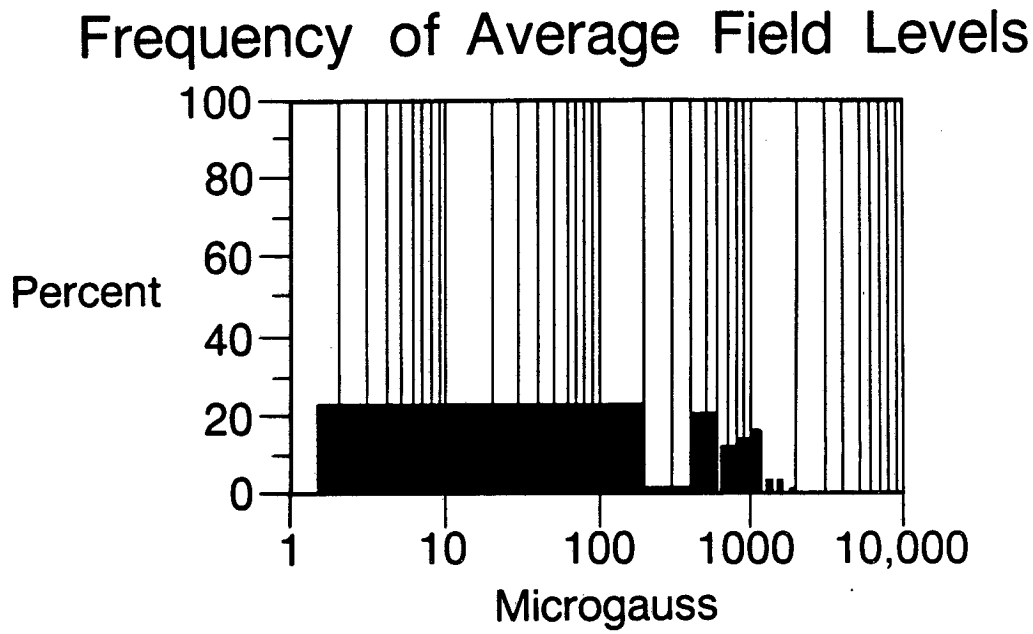

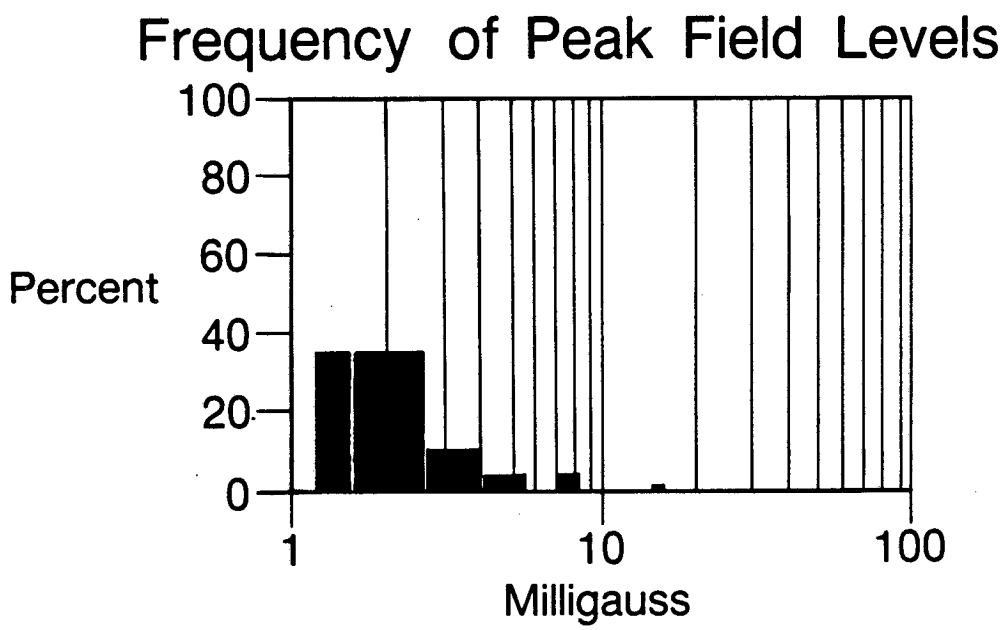

Figure 3-6. Histogram Representation of Laboratory Exposure Data

The data from Figure 3-5 are plotted as a histogram representation of the percent of time spent in various field levels. Histogram representations are shown for both the average and the peak 60-Hz magnetic field levels recorded during the 4-h test. [XBL8611-9062]

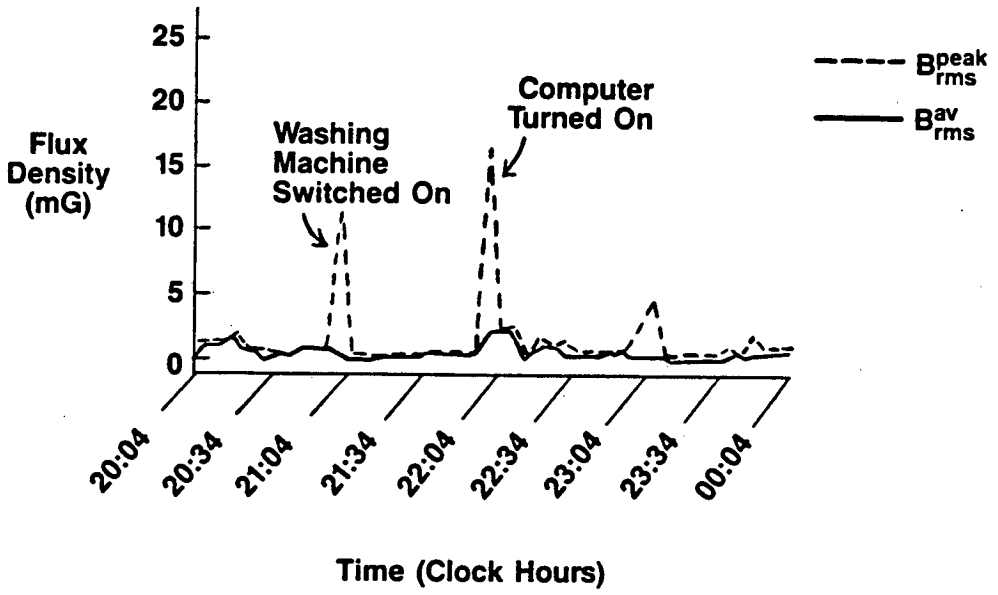

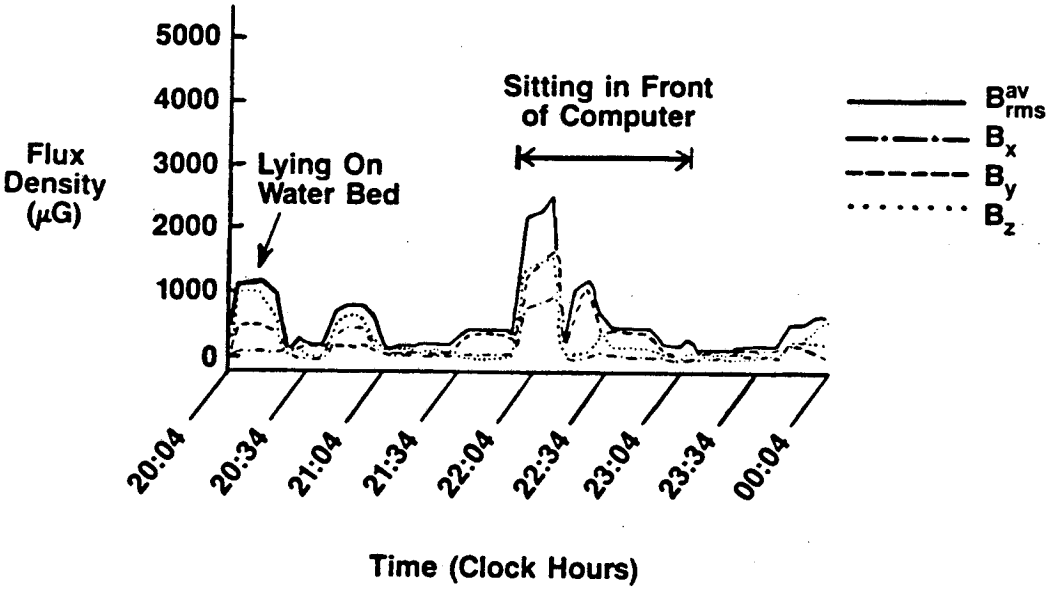

Figure 3-7. Field Test of the 60-Hz Dosimeter in a Private Residence

Results of a 4-h test of the 60-Hz magnetic field dosimeter's performance while worn as a belt-mounted unit in a private residence in El Cerrito, CA. [XBL 8611-6490]

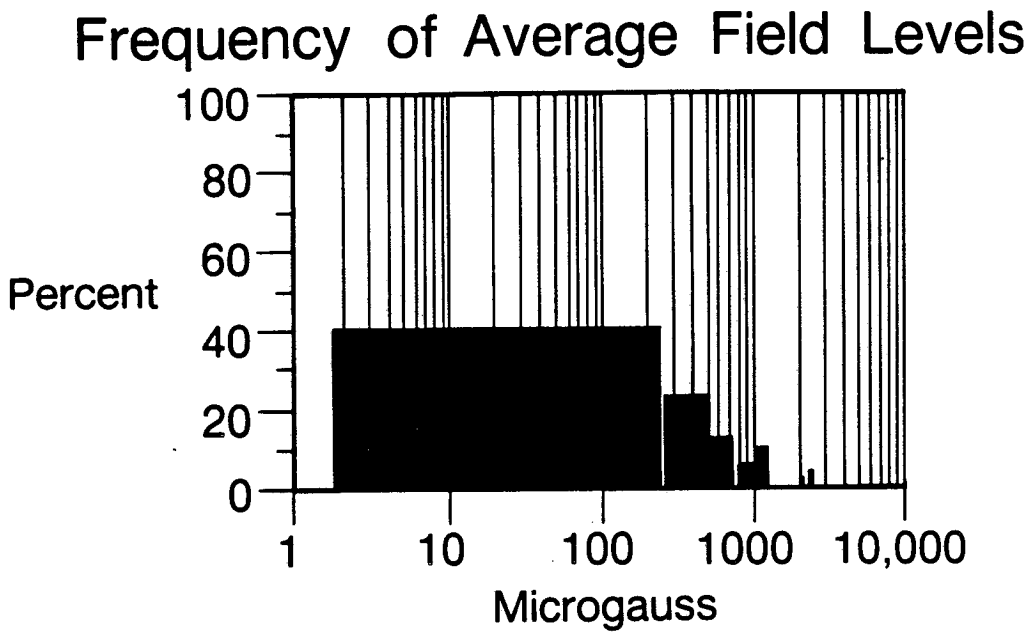

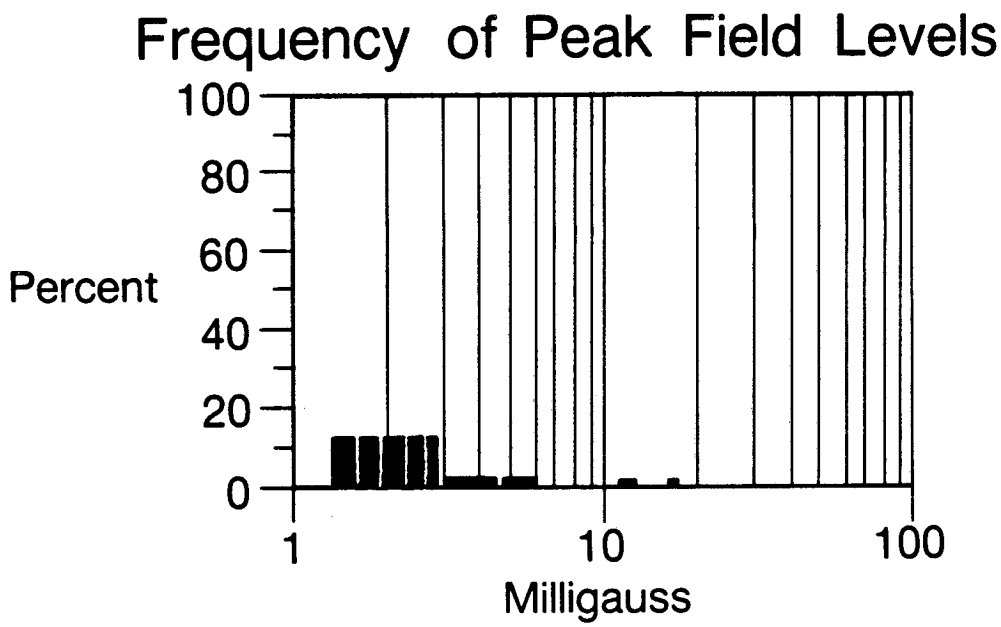

Figure 3-8. Histogram Representation of Residential Exposure Data

The data from Figure 3-7 are plotted as a histogram representation of the percent of time spent in various field levels. Histogram representations are shown for both the average and the peak 60-Hz magnetic field levels recorded during the 4-h test. [XBL8611-9063]

commercially available dosimeters. Deviations that averaged +14.7% in a 16.65 mG field and +5.6% in a 5.00 mG field were noted between the dosimeter's reading and the calculated field level. This disagreement was possibly due to differences in the techniques used to calibrate the dosimeter at the Lawrence Berkeley Laboratory and at the BPA facility. Also, slight misalignment of the dosimeter's detection coils within the test magnetic field could account for the discrepancy between the measured and calculated field values.

A 35-min walk-through of the BPA 230-kV substation was then made by Dr. Bracken while wearing the LBL dosimeter on his belt and carrying a second single-axis dosimeter consisting of a 6-inch coil and a model 42A meter produced by Monitor Industries (Boulder, CO). The results of this field test are summarized in Table 3-1, which was kindly provided by Dr. Bracken. There was reasonable agreement between the 60-Hz magnetic field intensities recorded by the LBL dosimeter and the Monitor Industries dosimeter, with the average values differing by only 7.2%. The results of this field test indicate that reasonable accuracy in recording 60-Hz magnetic fields can be achieved with a single-axis dosimeter in environments such as the BPA substation where the ambient magnetic fields are moderately homogeneous. For inhomogeneous fields, such as those observed in a household environment, a two-axis or three-axis dosimeter would be expected to provide more accurate recordings of the total 60-Hz magnetic field exposure.

Table 3-1

60-Hz MAGNETIC FIELD EXPOSURES RECORDED DURING
A WALK-THROUGH OF A 230-kV SUBSTATION

	Recorded Field Intensities (r.m.s. mG)				
Elapsed Time	LBL Dosimeter				Monitor Industries Dosimeter
(min)	B_x	B_y	B_z	$B^{av}_{r.m.s.}$	$B_{r.m.s.}$
5	3.2	4.3	4.3	7.9	9.3
10	16.4	17.1	17.9	34.2	33.2
15	22.4	27.5	26.6	51.0	47.0
20	23.7	31.2	28.0	55.3	50.4
25	11.2	12.2	12.2	23.8	21.2
30	25.6	29.9	25.2	53.9	50.7
35	25.6	36.7	35.2	65.8	60.6
Average Value ± S.D.	18.3 ± 8.5	22.7 ±11.7	21.3 ±10.5	41.7 ±20.5	38.9 ±18.4

Section 4

FUTURE DOSIMETER DESIGN FEATURES

Based on experience gained during the fabrication and testing of the prototype 60-Hz magnetic field dosimeter described in this report, there are several design features that should be incorporated in future models of the dosimeter to reduce its physical size and to extend its operating interval and its versatility. Briefly stated, these design features include:

- hybridized circuits to reduce physical size;
- fabricated entirely with CMOS components to reduce power consumption;
- AC plug-in adapter with battery back-up for long-term (months) field monitoring at a fixed site;
- larger memory bank ($\geqslant$ 256 K);
- adjustable sampling rate for short-term (hours to a few days) and long-term (months) exposure monitoring;
- IBM personal computer readout and graphics station with "user friendly" programs.

Ideally, the future generation of magnetic field dosimeters should be able to provide a greatly increased monitoring interval relative to the 9-hour interval that is achieved with the present dosimeter. In addition, it should be possible by the means summarized above to reduce the physical size of the dosimeter by nearly 50%.

Section 5
CONCLUSIONS

Performance tests conducted in the laboratory have demonstrated that the 60-Hz magnetic field dosimeter's detection system is capable of accurately recording a broad range of r.m.s. field intensities from 20 μG to 600 mG. The dosimeter is therefore suitable for detecting both the very low-intensity fields present in residences at locations away from appliances, and the higher field levels that are present in the vicinity of rotating machinery, numerous appliances, business machines, and high-voltage transmission and distribution lines. Field tests in an electronics laboratory, a 230-kV substation, and a household environment demonstrated the dosimeter's applicability to human exposure assessment. Several improvements could be made in the dosimeter's design to reduce its physical size, extend the continuous recording interval that can be achieved, and improve the versatility and data display capabilities of the dosimeter and the readout station.

Section 6

REFERENCES

1. Savitz, D.A.: Human health effects of extremely low frequency electromagnetic fields: critical review of clinical and epidemiologic studies. (In) IEEE Special Publication on "Biological Effects of Power Frequency Electric and Magnetic Fields," pp. 49-64. IEEE Publ. No. 86TH0139-6-PWR, Piscataway, N.J. (1986).

2. Tenforde, T.S.: Interaction of ELF magnetic fields with living matter. (In) Handbook of Biological Effects of Electromagnetic Radiation, pp. 197-225. Polk, C. and Postow, E., eds. Boca Raton, FL: CRC Press (1986).

3. Savitz, D.A. and Calle, E.E.: Leukemia and occupational exposure to electromagnetic fields: review of epidemiologic surveys. Am. J. Occup. Med. 29: 47-51 (1987).

4. Gauger, J.R.: Household appliance magnetic field survey. Chicago, IL: IIT Research Institute Report No. E06549-3 (1984).

5. IIT Research Institute: Representative electromagnetic field intensities near the Clam Lake (WI) and Republic (MI) ELF facilities. Naval Electronic Systems Command Report, Contract No. N00039-84-C-0070 (1984).

6. Deno, D.W.: Sources and structures of magnetic and electric fields in the home. (In) Interaction of Biological Systems with Static and ELF Electric and Magnetic Fields, pp. 207-224. Anderson, L.E., Kelman, B.J. and Weigel, R.J., eds. Richland, WA: Pacific Northwest Laboratory Report CONF-84 (1987).

7. Stuchly, M.A.: Human exposure to static and time-varying magnetic fields. Health Phys. 51: 215-225 (1986).

8. IEEE Power Engineering Society Transmission and Distribution Committee: Report on Corona and Field Effects of AC Overhead Transmission Lines. New York: IEEE (1984).

9. Tenforde, T.S.: Physical properties of high-voltage ELF electromagnetic fields and their interaction with living systems. (In) Proceedings of the Workshop on Electric Energy Systems Research, pp. 195-213. Washington, DC: National Research Council (1985).

10. Fujita, T.Y. and Tenforde, T.S.: Portable magnetic field dosimeter with data acquisition capabilities. Rev. Sci. Instrum. 53: 326-331 (1982).

Presented at the IEEE 1985 Nuclear Science Symposium, San Francisco, CA, October 23-25, 1985, and published in IEEE Trans. Nucl. Sci., **33** (1), 643-646, Feb. 1986

A WIDE DYNAMIC RANGE PORTABLE 60-HZ MAGNETIC DOSIMETER WITH DATA ACQUISITION CAPABILITIES

LBL-19640

C.C. Lo, T.Y. Fujita, A.B. Geyer and T.S. Tenforde

Lawrence Berkeley Laboratory
Berkeley, California U.S.A. 94720

Abstract

A portable dosimeter has been developed for monitoring human exposure to power-frequency magnetic fields in residential and occupational environments. The microprocessor-controlled dosimeter has been designed to measure 60-Hz field intensities that vary from 20 μG to 600 mG, thereby covering the broad range of field levels generally encountered in households and occupational settings. A digitized resolution of 2.5 μG is provided in the 20 μG to 10 mG range, and 150 μG resolution in the 10 mG to 600 mG range. Automatic range switching is implemented for both signal processing and data acquisition.

Introduction

Several recent epidemiology surveys have indicated that a relationship may exist between cancer risk and residential or occupational exposures to power-frequency magnetic fields.[1] A major deficiency in these epidemiological studies was the failure to use quantitative dosimetry procedures for characterizing magnetic field exposure levels. A program has therefore been undertaken to develop a compact battery-operated dosimeter that can be used for extended monitoring of the power-frequency magnetic field levels encountered by individuals in both industrial and residential environments.

The 60-Hz magnetic fields that are present near the surfaces of rotating machinery and certain household appliances reach intensities greater than 1 G, but typical levels within household and businesses range from 50 μG to 150 mG.[2-5] In the vicinity of high voltage transmission lines, fields up to 330 mG are present at ground level.[6] In order to encompass the broad range of field levels to which humans are exposed, the portable dosimeter described in this report was designed to have a wide dynamic range from 20 μG to 600 mG. The detection circuit utilizes three orthogonal 500-turn copper loops, and provides narrow bandpass filtration of the 60-Hz signals. A phase-lock loop and synchronized detector are used for processing the signals acquired on each of the three axes. The battery-powered dosimeter is microprocessor-controlled and contains 4000 12-bit words of ROM and RAM memory. The design of the data acquisition and storage system is similar to that used in a portable dosimeter previously developed in our laboratory for measuring DC magnetic fields.[7]

Sensor Design

Both thin-film Hall generators and multiturn coils were initially considered for use as field sensing elements in the dosimeter. The Hall sensor is attractive because of its small size and insensitivity to high-intensity electric fields. However, the output sensitivity is typically 12 nV/mG, which is too low for the detection of fields in the tens of microgauss range. The use of several Hall generators in series would increase the detector sensitivity, but would lead to an unacceptable increase in both the rate of battery power consumption and the total volume occupied within the dosimeter by the magnetic field sensors. Multiturn copper coils which provide a significantly greater signal output were therefore chosen as the detector elements for the magnetic field dosimeter.

From Faraday's law of induction, the peak voltage signal, V_p, produced by a coil positioned transverse to an incident magnetic field is

$$V_p = 2\pi f N B A$$

where N = number of turns in the coil, B = amplitude of the magnetic flux density, A = coil cross-sectional area, and f = magnetic field frequency. If N = 500 and A = 5.5 cm^2, the r.m.s. voltage output of such a coil is 6.8 μV/mG, which exceeds the output of a thin-film Hall generator by nearly two orders of magnitude. The coil parameters can be easily changed to obtain a desired output signal level.

In the portable dosimeter, three 500-turn coils are arranged along orthogonal axes to monitor the x, y and z components of 60-Hz ambient magnetic fields. Since the coils are also sensitive to electric fields, they are shielded within individual copper chambers. These copper shields have been found by direct measurements to have no influence on the penetration of 60-Hz magnetic fields. To avoid erroneous operation of other dosimeter components in large electric fields, the entire unit is also encased in a conductive shield.

Dosimeter Operation

Figure 1 shows a block diagram of the dosimeter, and Fig. 2 is a schematic diagram of the detector circuitry associated with each of the three orthogonal coils. The signal output from each coil is amplified by two 60-Hz bandpass preamplifiers in cascade. The first stage is a second-order multiple-feedback bandpass active filter having a gain of 40 at 60 Hz. The input signal path is AC coupled to prevent any significant amplification of very low frequency signals induced by body rotation within the earth's magnetic field. The second amplifier stage employs a twin-T bandpass active filter having a gain of 250 or 4.1 depending on whether the field being monitored is below or above 10 mG. The FET transistor in the feedback path controls the gain of the second active filter. The total maximum gain of the two active filters is set at 10,000 so that a 50 μG field will yield a 3.4 mV signal and a 10 mG field will yield a signal of 680 mV at the output of the second active filter. When the field being monitored exceeds 10 mG, the total gain of the two active filters is automatically decreased to 165. A 20 mG field will thus yield a 22.4 mV signal and a 500 mG field will yield a 560 mV signal at the output of the second active filter.

The second active filter supplies signals to the phase-lock loop (PLL) and the synchronous detector. The PLL phase locks with the incoming signal and produces a quadrature voltage-controlled oscillator (VCO) output that is in phase with the incoming signal. The quadrature VCO output is then used as the demodulating signal for the synchronous detector. The demodulated output is passed through a low-pass filter suppressing

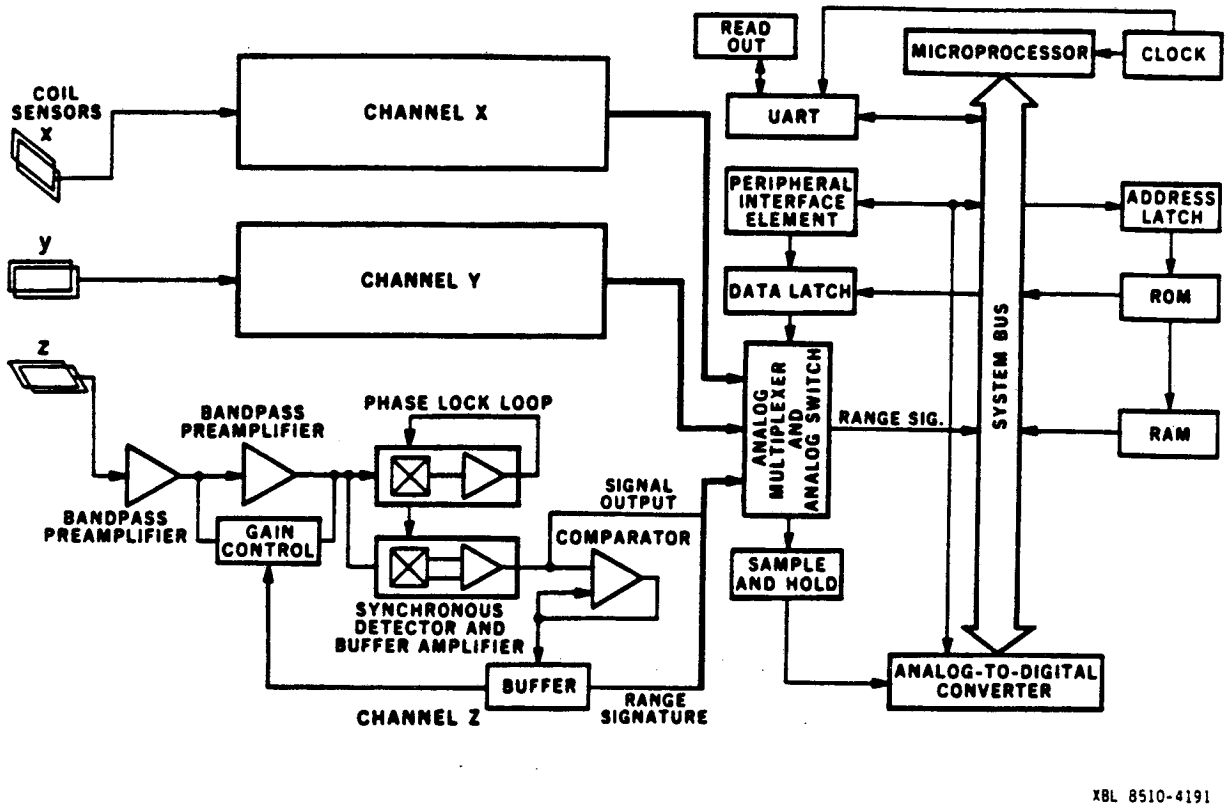

Fig. 1 Block diagram of the portable 60-Hz magnetic field dosimeter.

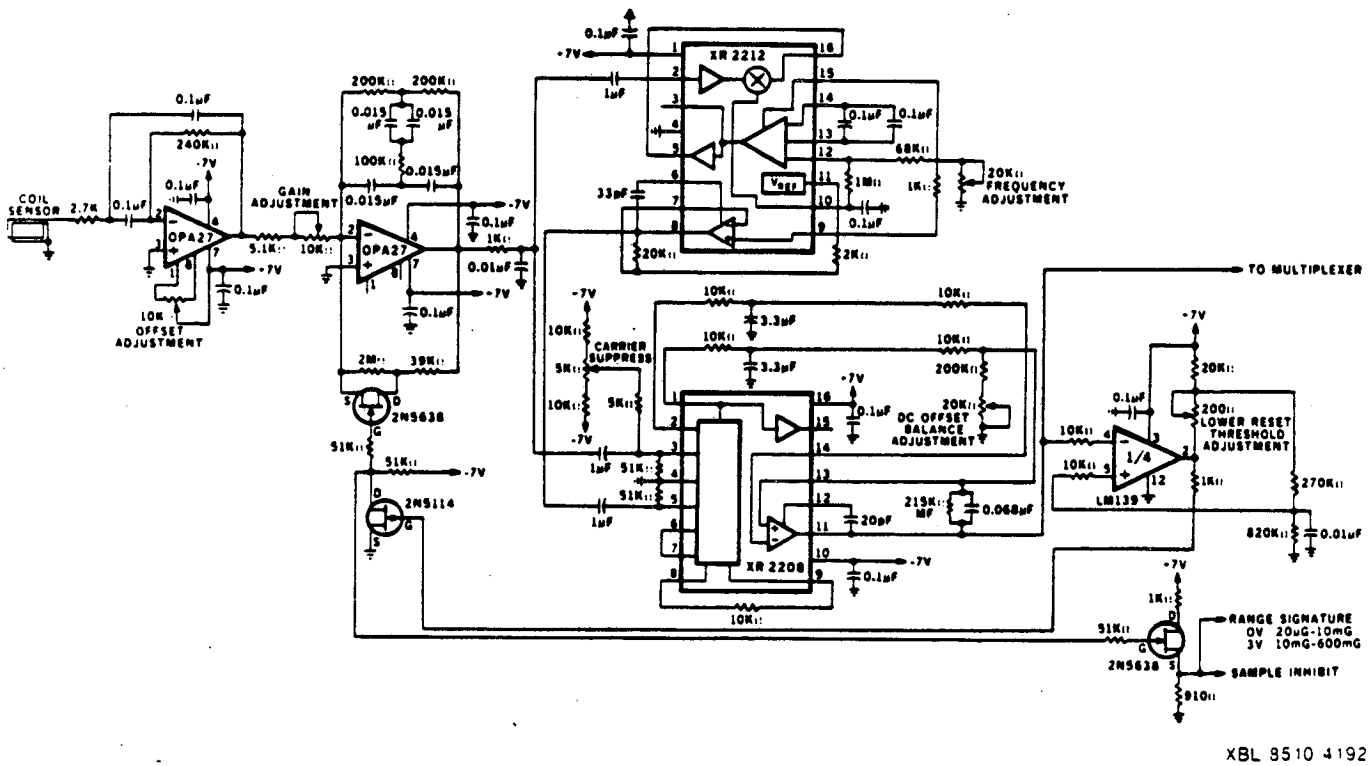

Fig. 2 Schematic diagram of the magnetic field detection circuitry.

all harmonics except the DC component, which is determined only by the amplitude of the incoming 60-Hz magnetic field.

The DC output of the synchronous detector is amplified to be compatible with the 0-5 V range of the analog-to-digital converter in the data acquisition section of the dosimeter. The amplified detector output is also used for automatic ranging purposes. A comparator is used to look at the amplified output of the detector, and compares this signal to a reference voltage that is derived from its own output and the +7 V bus voltage. In the high-gain operation range the reference voltage is set at +5 V. When the field being monitored exceeds 10 mG, the comparator changes state and reduces the gain of the active filters to 165. At the same time it changes the reference voltage to +70 mV which represents a 9 mG field. If the field being monitored drops below 10 mG, the comparator changes state and again the dosimeter operates with a gain of 10,000.

The output of the comparator is also buffered by two FETs to produce a TTL-compatible signal that is used to make two important decisions. Every time a transition occurs either from 0 to 1 or 1 to 0 it signals the program to hold off operation for 120 ms to allow the PLL and various filters to stabilize before digitization is carried out. The TTL "0" level also signals the program that the field being monitored is in the 20 μG to 10 mG range, whereas the TTL "1" level indicates that the ambient field is in the 10 mG to 600 mG range.

Three analog switches are used to transfer data to the ADC. Digitization of the three orthogonal axes is done sequentially. A waiting time of 500 μs before digitization allows the analog switches to reach a stable "on" state. A 12-bit successive approximation ADC is used to match the 12-bit architecture of the microprocessor. The ADC is used in the unipolar mode providing 2.5 μG/bit and 150 μG/bit in the low- and high-gain modes, respectively. A programmable interface element (PIE) interfaces the ADC and the universal asynchronous receiver-transmitter (UART) used for serial data transmission to the microprocessor.

The microprocessor memory unit consists of 1024 12-bit words of read-only memory (ROM) and 3072 12-bit words of random-access memory (RAM). The ROM contains the monitor and input-output handler. Scratch-pad memory, temporary buffers, program and data storage registers are located in RAM. The data acquisition program is initialized by a bench-mounted HP85 computer during start-up of the dosimeter. This computer also retrieves data from RAM through an RS-232-C serial interface when the field monitoring is completed.

Dosimeter Performance

Initial development and calibration tests for the dosimeter's field detection circuitry were carried out with a standard coil that provided a known magnetic flux density as a function of the applied current. The coil was placed inside a Mu-metal shield to reduce the background 60-Hz magnetic field. The lowest background field thus obtained was about 20 μG. The current used to excite the coil was generated by a function generator, and was monitored by measuring the voltage drop across a current shunt.

Figure 3 shows the amplified detector output as a function of magnetic flux density. In the high sensitivity range, the DC output of the detector buffer amplifier ranged from 13 mV to 4.8 V, corresponding to

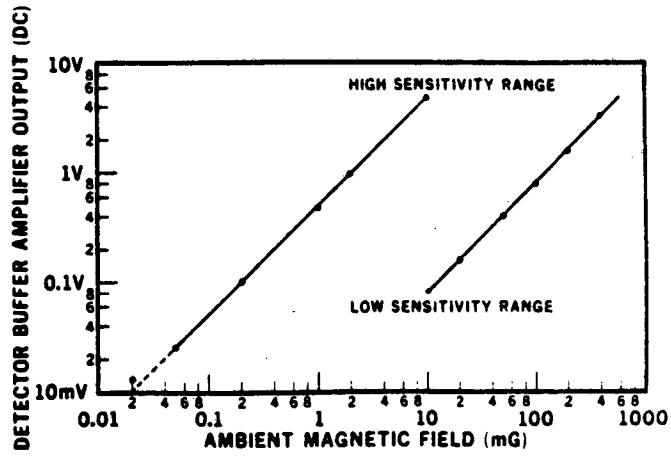

XBL 8510-4193

Fig. 3 Plots of the amplified detector output as a function of magnetic flux density.

field levels of 20 μG to 10 mG. From the data presented in Fig. 3, it can be seen that the controlled field was contaminated by the background field below 50 μG. This contamination is evidenced by the deviation of the 20 μG signal output from the otherwise linear transfer function of the detector. When the ambient field exceeds 10 mG, the DC output voltage exceeds 5 V and forces the comparator to change state and reset the dosimeter to the low sensitivity range. In this range the DC detector buffer amplifier output varied from 80 mV to 5 V, corresponding to field levels of 10 mG to 625 mG. The linearity of the detection system was observed to be within 2%.

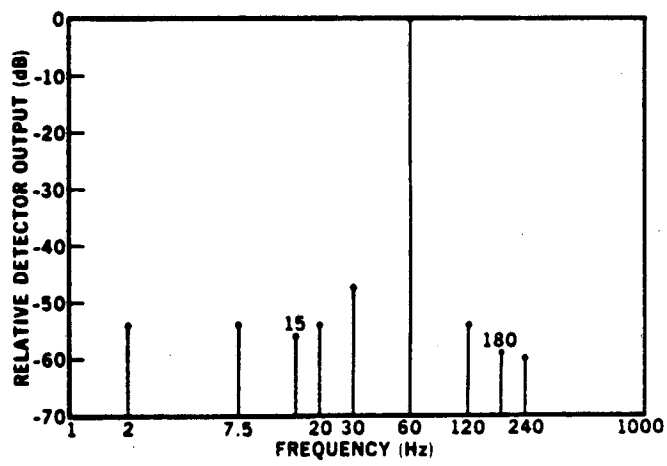

XBL 8510-4194

Fig. 4 Harmonic rejection performance of the 60-Hz magnetic field detection circuitry.

Figure 4 shows the harmonic rejection performance of the dosimeter field detection circuitry. All ambient harmonic fields are at least 45 dB below the fundamental 60-Hz field. The measurement was made by setting a fixed flux density level and monitoring the detector buffer amplifier output as the signal frequency was scanned across the range indicated in Fig. 4. Contamination of the main 60-Hz signal by internally generated harmonics is less than 1%.

Discussion

Initial performance tests have demonstrated that the 60-Hz magnetic field dosimeter's detection system is capable of monitoring the broad range of fields from 20 μG to 600 mG. The dosimeter will therefore be suitable for detecting the extremely low-intensity fields present in households at locations away from appliances as well as the higher field levels in the vicinity of rotating machinery, numerous appliances, business machines, and high-voltage transmission lines.

Two limitations in the present design of the dosimeter are its 4K memory capacity and the anticipated 10-hr limit on continuous operation when a single set of three 3.9 V lithium batteries is used as the power source. The first of these limitations could be removed through the use of a more powerful CPU with expanded memory capacity. The second limitation is a result of the present state of battery technology, and could be overcome if higher energy density batteries become commercially available. It would also be possible to extend the continuous operating time by hybridizing the dosimeter circuits to provide more space for housing additional lithium batteries.

Acknowledgments

This research was supported by the Electric Power Research Institute (Palo Alto, CA) under Contract No. RP799-21, and by the Office of Energy Research, Health and Environmental Research Division, of the U.S. Department of Energy under Contract No. DE-AC03-76SF00098 with the Lawrence Berkeley Laboratory. The helpful discussions with William F. Kolbe (LBL) on the sensors are gratefully acknowledged.

References

1. H.B. Graves, (Committee Chairman), "Biological and Human Health Effects of Extremely Low Frequency Electromagnetic Fields", Amer. Inst. of Biological Sciences Report of the Comm. on Biological and Human Health Effects of ELF Electromagnetic Fields, Arlington, VA, pp 79-127 and 241-269 (1985).

2. J.R. Gauger, "Household Appliance Magnetic Field Survey", Chicago, IL: IIT Research Institute Report No. E06549-3 (1984).

3. D.W. Deno, "Sources and Structures of Magnetic and Electric Fields in the Home", presented at the 23rd Hanford Life Sciences Symposium on Interaction of Biological Systems with Static and ELF Electric and Magnetic Fields, Richland, WA (1984).

4. IIT Research Institute, "Representative Electromagnetic Field Intensities Near the Clam Lake (WI) and Republic (MI) ELF Facilities", Naval Electronic Systems Command Report, Contract No. N00039-84-C-0070 (1984).

5. T.S. Tenforde, "Physical Properties of High-Voltage ELF Electromagnetic Fields and Their Interaction with Living Systems", presented at the Workshop on Electric Energy Systems Research, National Research Council, Washington, D.C. (1985).

6. IEEE Power Engineering Society Transmission and Distribution Committee Report on Corona and Field Effects of AC Overhead Transmission Lines (1984).

7. T.Y. Fujita and T.S. Tenforde, "Portable Magnetic Field Dosimeter with Data Acquisition Capabilities", Rev. Sci. Instrum. 53, pp 326-331 (1982).

APPENDIX B

OPERATION INSTRUCTIONS FOR THE 60-HZ MAGNETIC FIELD DOSIMETER AND HP-85 COMPUTER

I. Dosimeter Set-up:

A. Insert three 3.9 V lithium batteries in the housing provided inside the top cover of the dosimeter's case. [Battery type: Electrochem Ind. (Clarence, New York) Model BCX-72-AA, 3.9 V, part number 3B64].

B. With the top cover removed, set range switch on the top board of the dosimeter to either the high-field range (2-600 mG) by pushing switch no. 3 to the "on" position, or to the low-field range (0-10 mG) by pushing switch no. 3 to the "off" position.

C. Replace the top cover of the dosimeter's case.

II. Data Acquisition Mode

A. Connect the Portable Magnetic Dosimeter to the HP-85 Readout Station using the RS-232 cable.

1. Turn ON the Portable Magnetic Dosimeter.
2. Press the RESET pushbutton on the Portable Magnetic Dosimeter.

B. Initialize the HP-85 Readout Station.

1. Insert program cassette.
2. Turn ON the Readout Station (ON/OFF switch located at the rear of the desktop computer.)
3. Wait for the cursor to appear in the upper left hand corner of the screen.

C. Start program execution.

1. Press LOAD.
2. Wait for program to be read from the program cassette.
3. Press RUN.
4. Wait for screen to display INITIALIZE OR DUMP DATA (Y/N).
5. Press Y (Special Function Key k7).
6. Verify that the Portable Magnetic Dosimeter power is ON. If not, turn power ON and press the RESET pushbutton.
7. Press CONT.
8. Wait for completion of the battery test. If the Portable Magnetic Dosimeter battery voltage is below the minimum operating level, then the PROGRAM MENU will not be displayed on the screen. Replace the batteries and return to the beginning of this procedure.
9. Press I (Special Function Key kl).
10. Messages will be displayed on the screen.
11. Press I (Special Function Key kl).
    a. Enter the date: DDMMYY
    b. Enter the user I.D.: UUUUUU
    c. Enter location code: LLL (< 512)
    d. Enter start time: HHMM (24-hour clock).
12. If all the identification information is correct, then press G (Special Function Key k8). Otherwise press I (Special Function Key kl) and repeat Step 11.
13. Disconnect the Portable Magnetic Dosimeter from the Readout Station.
    a. Press CONT.
    b. Carefully place the switch guard-plate on the Portable Magnetic Dosimeter.

III. Data Retrieval Mode

A. Connect the Portable Magnetic Dosimeter to the HP-85 Readout Station using the RS-232 cable.

B. Initialize the HP-85 Readout Station.

1. Insert program cassette.
2. Turn ON the Readout Station (ON/OFF switch located at the rear of the desktop computer).
3. Wait for cursor to appear in the upper left hand corner of the screen.

C. Start program execution.

1. Press LOAD.
2. Wait for program to be read from the program cassette.
3. Press RUN.
4. Wait for screen to display INITIALIZE OR DUMP DATA (Y/N).
5. Press Y (Special Function Key k7).
6. Press the Portable Magnetic Dosimeter RESET pushbutton.
7. Press CONT.
8. Wait for completion of the battery test. If the Portable Magnetic Dosimeter battery voltage is below the minimum operating level then the PROGRAM MENU will not be displayed on the screen, and all data from the current experiment will be lost.
9. Press D (Special Function Key k2).
10. Messages will be displayed on the screen.
11. Press D (Special Function Key k2).
    a. Enter stop time: HHMM (24-hour clock).
    b. Enter scale factor: LOW FIELD or HIGH FIELD.
12. If all the information is correct, then press G (Special Function Key k8). Otherwise press D (Special Function Key k2) and repeat Step 11.
13. Press the Portable Magnetic Dosimeter RESET pushbutton.
14. Remove the program cassette.
15. Insert the data cassette.
16. Press CONT.
17. Wait for data to be written on the cassette.
18. After the data is written, messages will be displayed on the screen.
19. Press RET (Special Function Key k6).
20. Messages will be displayed on the screen.

21. Remove the data cassette.
22. Insert the program cassette.
23. Disconnect the Portable Magnetic Dosimeter from the Readout Station.
    a. Press CONT.
    b. Turn OFF the Portable Magnetic Dosimeter.

IV. Display/Print Data Mode

A. Initialize the HP-85 Readout Station.

1. Insert the program cassette.
2. Turn ON the Readout Station (ON/OFF switch located at the rear of the desktop computer).
3. Wait for cursor to appear in the upper left hand corner of the screen.

B. Start program execution.

1. Press LOAD.
2. Wait for program to be read from the program cassette.
3. Press Run.
4. Wait for screen to display INITIALIZE OR DUMP DATA (Y/N).
5. Press N (Special Function Key k8).
6. Menu will be displayed on the screen.
9. Press 0 (Special Function Key k3).
10. More messages will be displayed on the screen.
11. Press 0 (Special Function Key k3).
12. Message will be displayed on the screen.
13. To display or print data values, press FD (Special Function Key k1).
14. Wait for program to be read from the program cassette. Message will be displayed on the screen.
15. Replace the program cassette with the data cassette and press CONT.

    a. To display data on the screen from a particular file, press

DISP (Special Function Key k1).

i. Type file name followed by END LINE.

ii. Successive frames of data will be displayed on the screen for about 15 seconds. To freeze a particular data frame on the screen, press STOP (Special Function Key k2), and to continue the sequential display, press START (Special Function Key k6).

b. To print data from a particular file, press PRNT (Special Function Key k2).

i. Type file name followed by END LINE.

ii. Successive frames of data will be printed. To abort or terminate the printout, press RET (Special Function Key k6).

IV. Linear Line-Graph Plotting Mode

A. Initialize the HP-85 Readout Station.

1. Insert the program cassette.
2. Turn ON the Readout Station (ON/OFF switch located at the rear of the desktop computer).
3. Wait for cursor to appear in the upper left hand corner of the screen.

B. Start program execution.

1. Press LOAD.
2. Wait for program to be read from the program cassette.
3. Press RUN.
4. Wait for screen to display INITIALIZE OR DUMP DATA (Y/N).
5. Press N (Special Function Key k8).
6. Menu will be displayed on the screen.
7. Press 0 (Special Function Key k3)
8. Messages will be displayed on the screen.
9. Press 0 (Special Function Key k3).

10. More messages will be displayed on the screen.
11. Press 0 (Special Function Key k3).
12. Message will be displayed on the screen.
13. To plot data on a linear scale, press PLOT (Special Function Key k2).
14. Wait for program to be read from the program cassette. Message will be displayed on the screen.
15. Replace the program cassette with the data cassette and press CONT.
16. Type file name followed by END LINE.
    a. To display B_{tot}(max) and B_{tot}(avg) plots, press MAXB (Special Function k1). Press CONT when plot is done.
    b. To display B_{tot}(avg), B_x(avg), B_y(avg) and B_z(avg) plots, press AVGB (Special FunctionKey k2). Press CONT when plot is done.
    c. To display dB_{tot}/dt(max) and dB_{tot}/dt(avg) plots, press MAXDB (Special Function Key k5). Press CONT when plot is done.
    d. To print the three data plots described above, press COPY (Special Function Key k7).
    e. To plot the next data file, press NEXT (Special Function Key k4).
    f. To print the three data plots described above for successive data files, press COPALL (Special Function Key k8).
    g. To abort or terminate the plotting, press RET (Special Function Key k6).
    h. After pressing CONT in MAXB, AVGB or MAXDB, a portion of the display may be expanded for better resolution by pressing EXPD (Special Function Key k3).

        i. A fiducial for the right-hand limit will appear and move to the right across the screen after pressing →. The fiducial may be moved to the left by pressing ←.
        ii. When the desired position is reached, press ↓.
        iii. A fiducial for the left-hand limit will appear and move to the right across the screen after pressing →. The ficudial may be moved to the left by pressing ←.

iv. When the desired position is reached, press ↓.

v. Press CONT when plot is done.

vi. The expanded display may be printed by pressing COPYEX (Special Function Key k3).

V. Logarithmic Bar-Graph Plotting Mode

A. Initialize the HP-85 Readout Station

1. Insert the program cassette.
2. Turn ON the Readout Station (ON/OFF switch located at the rear of the desktop computer).
3. Wait for cursor to appear in the upper left hand corner of the screen.

B. Start program execution

1. Press LOAD.
2. Wait for program cassette.
3. Press RUN.
4. Wait for screen to display INITIALIZE OR DUMP DATA (Y/N).
5. Press N (Special Function Key k8).
6. Menu will be displayed on the screen.
7. Press 0 (Special Function Key k3).
8. Messages will be displayed on the screen.
9. Press 0 (Special Function Key k3).
10. More messages will be displayed on the screen.
11. Press 0 (Special Function Key k3).
12. Message will be displayed on the screen.
13. To plot data on a logarithmic scale, press LOG (Special Function Key k3).
14. Wait for program to be read from the program cassette. Message will be displayed on the screen.
15. Replace the program cassette with the data cassette and press CONT.
16. Type file name followed by END LINE.
    a. To display B_{tot}(max), press MAXB (Special Function Key k1).

Press CONT when plot is done.

b. To display B_{tot}(avg), press AVGB (Special Function Key k2). Press CONT when plot is done.

c. To display dB_{tot}/dt(max), press MAXDB (Special Function Key k3). Press CONT when plot is done.

d. To display dB_{tot}/dt(avg), press AVGDB (Special Function Key k4). Press CONT when plot is done.

e. To print the four data plots described above, press COPY (Special Function Key k5).

f. To plot the next data file, press NEXT (Special Function Key k6).

g. To print the four data plots described above for successive data files, press COPALL (Special Function Key k7).

h. To abort or terminate the plotting, press RET (Special Function Key k8).

VI. Listing Mode

A. Initialize the HP-85 Readout Station

1. Insert the program cassette.
2. Turn ON the Readout Station (ON/OFF switch located at the rear of the desktop computer).
3. Wait for cursor to appear in the upper left hand corner of the screen.

B. Start program execution.

1. Press LOAD.
2. Wait for program to be read from the program cassette.
3. Press RUN.
4. Wait for screen to display INITIALIZE OR DUMP DATA (Y/N).
5. Press N (Special Function Key k8).
6. Menu will be displayed on the screen.
7. Press L (Special Function Key k4).
8. Message will be displayed on the screen.
9. Replace the program cassette with the data cassette and press CONT.

a. To generate a directory of all data files, press ALL (Special Function Key k1).

b. To generate a directory of data files relative to an individual, press IND (Special Function Key k2). Type in I.D. number followed by END LINE.

c. To generate a directory of data files relative to a location, press LOC (Special Function Key k3). Type in location number followed by END LINE.

d. To display the directory on the screen, press DISP (Special Function Key k1).

e. To print the directory, press PRNT (Special Function Key k2).

f. To abort or terminate the listing, press RET (Special Function Key k6).

LAWRENCE BERKELEY LABORATORY
TECHNICAL INFORMATION DEPARTMENT
UNIVERSITY OF CALIFORNIA
BERKELEY, CALIFORNIA 94720