Presented at the Berkeley A. P. S.
Meeting of the Division of Particles
and Fields, Berkeley, California,
August 13-17, 1973

LBL-2407 c.2 repl.

REVIEW OF K° DECAYS

David R. Nygren

RECEIVED
LAWRENCE
RADIATION LABORATORY

OCT 24 1978

LIBRARY AND
DOCUMENTS SECTION

August 1973

Prepared for the U. S. Atomic Energy Commission
under Contract W-7405-ENG-48

TWO-WEEK LOAN COPY

This is a Library Circulating Copy
which may be borrowed for two weeks.
For a personal retention copy, call
Tech. Info. Division, Ext. 6782

LAWRENCE BERKELEY LABORATORY
UNIVERSITY OF CALIFORNIA
BERKELEY

LBL-2407 c.2 repl.

DISCLAIMER

This document was prepared as an account of work sponsored by the United States Government. While this document is believed to contain correct information, neither the United States Government nor any agency thereof, nor the Regents of the University of California, nor any of their employees, makes any warranty, express or implied, or assumes any legal responsibility for the accuracy, completeness, or usefulness of any information, apparatus, product, or process disclosed, or represents that its use would not infringe privately owned rights. Reference herein to any specific commercial product, process, or service by its trade name, trademark, manufacturer, or otherwise, does not necessarily constitute or imply its endorsement, recommendation, or favoring by the United States Government or any agency thereof, or the Regents of the University of California. The views and opinions of authors expressed herein do not necessarily state or reflect those of the United States Government or any agency thereof or the Regents of the University of California.

REVIEW OF K° DECAYS*

David R. Nygren
Lawrence Berkeley Laboratory, Berkeley, California 94720

ABSTRACT

A review is given of selected topics in K^o decays for which recent results have led to substantial progress and/or controversy.

I. INTRODUCTION

Since the last review by Pondrom in 1971[1], new experimental results have significantly affected the status of the following topics of K^o decays:

1. Form factors in the decay $K_L^o \to \pi \ell \nu$;
2. CP Violation and $K_{S,L}^o$ decay parameters;
3. The $K_L^o \to \mu^+ \mu^-$ puzzle.

In the case of the $K_{\ell 3}^o$ form factors, new results from two very precise experiments are in good agreement with expectations. On the other hand, some parameters relevant to CP violation have changed by many standard deviations according to recent results, and the origin of the discrepancies with the older data remains unknown. Finally, a pair of related experiments have provided evidence that the decay $K_L^o \to \mu^+ \mu^-$ does exist at an appropriate rate, in contradiction with the negative result of a Berkeley group.

II. $K_L^o \to \pi \ell \nu$ FORM FACTORS

In the Cabibbo theory of the V-A weak interaction, the matrix element for the decay $K^o \to \pi^- \ell^+ \nu$ can be written in a Lorentz-covariant form as

$$M = \frac{G}{\sqrt{2}} \sin \theta_c \left[\bar{u}_\ell \gamma_\mu (1-\gamma_5)\, u_\nu\right] x \left\langle \pi^- \middle| V^\mu \middle| K^o \right\rangle .$$

The hadronic part is customarily expressed as

$$\left\langle \pi^- \middle| V^\mu \middle| K^o \right\rangle = F_+(t)\,(P_k + P_\pi)^\mu + F_-(t)\,(P_k - P_\pi)^\mu \quad , \tag{1}$$

where the scalar functions $F\pm(t)$ describe the dependence of the strangeness-changing weak hadronic vector current on convenient combinations of the two independent four vectors P_k and P_π. $F\pm(t)$ are functions only of the invariant four momentum transfer

$$t = (P_k - P_\pi)^2 = M_k^2 + M_\pi^2 - 2M_k E_\pi^* \tag{2}$$

where E_π^* is the pion energy in the K^o rest frame. The rather limited range of t available in K^o decay is

$$M_\ell^2 \le t \le (M_k - M_\pi)^2 = 0.128\ (\mathrm{GeV/c})^2 \tag{3}$$

In the rate, terms involving $F_-(t)$ are proportional to M_ℓ^2, with the consequence that only $F_+(t)$ contributes to K_{e3} decays. Furthermore, the Cabibbo formulation is invariant under time reversal, leading to the requirement that $F_-(t)$ and $F_+(t)$ must be relatively real. Finally, $\Delta S=-\Delta Q$ transitions are forbidden in lowest order.

Violations of the $\Delta S=+\Delta Q$ rule are customarily described by the introduction of new form factors $g\pm(t)$ defined in an analogous way:

$$\langle \pi^+ | V^\mu | K^o \rangle = g_+(t)\ (P_K+P_\pi)^\mu + g_-(t)\ (P_K-P_\pi)^\mu$$
$$\langle \pi^- | V^\mu | \bar{K}^o \rangle = g_+^*(t)\ (P_K+P_\pi)^\mu + g_-^*(t)\ (P_K-P_\pi)^\mu$$

and the ratio $X\equiv g/F$ must be zero if the $\Delta S=\Delta Q$ rule is satisfied. Non-zero values of ImX imply time-reversal violation, of special interest as a possible connection to the phenomenon of CP violation in K_L^o decays.

Most of the experimental work on the search of $\Delta S=\Delta Q$ amplitudes has employed the study of the time dependence of the semileptonic decays of an initially produced K^o state. The essential complication in such experiments is the natural development of a $\bar{K}^o$ component in the evolution of the state as the K_S^o and K_L^o amplitudes decay:

$$|K^o\rangle \rightarrow |K_S^o\rangle\ e^{-iM_S\tau} + |K_L^o\rangle e^{-iM_L\tau}$$
$$= |K^o\rangle (e^{-iM_S\tau} + e^{-iM_L\tau}) + |\bar{K}^o\rangle (e^{-iM_S\tau} - e^{-iM_L\tau}) \qquad (5)$$

where $M_{L,S} = m_{L,S} - i\Gamma_{L,S}/2$ and M_L and M_S are the masses, and Γ_L and Γ_S are the total decay rates of the long- and short-lived states. The decay rate into positive and negative leptons is easily found to be

$$N^\pm(\tau) \propto |1+x|^2 e^{-\Gamma_S\tau} + |1-x|^2 e^{-\Gamma_L\tau}$$
$$+\left[\pm 2(1-|x|^2)\cos(\Delta m\,\tau) - 4\,\mathrm{Im}X \sin(\Delta m\,\tau)\right] e^{-\bar{\Gamma}\tau} \qquad (6)$$

where $\Delta m = m_L - m_S$ and $\bar{\Gamma} = (\Gamma_S + \Gamma_L)/2$.

An MIT contribution to this conference[2] describes an experiment which employed the reaction sequence

$$K^+ + \text{Platinum} \rightarrow K^o + \text{neutrals}$$
$$\hookrightarrow \pi^\pm\ e^\pm \nu$$

The decays were observed by optical spark chambers embedded in a magnetic field of 14.5 Kilogauss. Electrons were identified by shower production in a 2.8 radiation length lead-plate spark

chamber, followed by lead-lucite cerenkov counters. Approximately 1700 K_{e3} decays survived cuts, with a small background due to the relatively copious $K_S^o \to \pi^+ \pi^-$ mode. The analysis gives

$$\begin{aligned} \mathrm{Re}X &= -0.008 \pm 0.044 \\ \mathrm{Im}X &= -0.017 \pm 0.060 \end{aligned} \tag{7}$$

in good agreement with the $\Delta S = \Delta Q$ rule. In this case $X = g_+/f_+$ since just K_{e3} decays are being studied. Adding this result to the world average one obtains[3]

$$\begin{aligned} \mathrm{Re}X &= +\ 0.0016 \pm 0.025 \\ \mathrm{Im}X &= +\ 0.0002 \pm 0.024 \end{aligned} \tag{8}$$

shown in Fig. 1 along with recent results of comparable accuracy. For the remaining purposes of this review X can safely be assumed to equal zero.

In the t region available in K^o decays it is reasonable to assume that a linear approximation will adequately describe the t dependence of $F\pm(t)$:

$$F+(t) \simeq F+(0)\left[1 + \lambda_+(t/M_\pi^2)\right] \tag{9}$$

$$F-(t) \simeq F-(0)\left[1 + \lambda_-(t/M_\pi^2)\right] \tag{10}$$

Frequently, the ratio $\xi(t) \equiv F_-(t)/F_+(t)$ has also been used to characterize experimental data, but it is theoretically advantageous to use instead $F_+(t)$ and another variable $F_o(t)$, given by

$$F_o(t) = F_+(t) + \frac{t}{M_K^2 - M_\pi^2} F_-(t); \tag{11}$$

F_+ and F_o correspond respectively to 1^- and 0^+ amplitudes for the lepton pair.[4] The expansion of $F_o(t)$ as a linear function of t

$$F_o(t) = F_o(o)\left[1 + \lambda_o \frac{t}{M_\pi^2}\right], \tag{12}$$

implicitly assumes that λ_- is negligibly small. In this approximation,

$$\xi(0) = \frac{M_K^2 - M_\pi^2}{M_\pi^2} (\lambda_o - \lambda_+) \tag{13}$$

The form factors F_+ and F_o are also expected to be adequately described by simple pole forms with masses appropriate to the 1^- and 0^+ intermediate states. If $F_+(t) = F_+(0)M^2/(M^2-t)$ is assumed to be dominated by the $K^*(892)$ state then $\lambda_+ = 0.024$ around $t=0$; averaged over the physical region λ_+ is about 0.030.

The assumptions of chiral $SU_3 \otimes SU_3$ algebra, soft pions and PCAC lead to the Callan-Treiman relation, essentially a statement about F_o at the unphysical t value of M_K^2:

$$F_o(M_K^2) = F_+(0)x(1.27 \pm o.03) \tag{14}$$

In the linear approximation (12), this fixes λ_o to be

$$\lambda_o = 0.021 \pm 0.002 \tag{15}$$

Experimentally, the shape of the Dalitz plot density, the branching ratio $\Gamma(K_{\mu 3})/\Gamma(K_{e3})$, and the polarization variation within the $K_{\mu 3}$ Dalitz plot can be measured to determine the form factors. The results for λ_+ from studies of K^+_{e3} and K^o_{e3} are reasonably consistent and in good agreement with the pole approximation (Fig. 2). A contribution to this conference by a CERN-Heidelberg group[5] and a recent result by a SLAC-Santa Cruz group[6] have reduced the error on this parameter by a very substantial factor, and merit special attention here.

The apparatus of the CERN-Heidelberg experiment is shown in Figure 3. $K^o_{S,L}$ decays are observed in a short neutral beam with a magnetic spectrometer employing multiwire proportional chambers, a hydrogen gas cerenkov counter for electron identification, and a thick concrete absorber-hodoscope combination for muon identification. The Dalitz plot was studied for $5x10^5$ K^o_{e3} decays and three different methods were employed to overcome the ambiguity problem arising from backward or forward neutrino emission. The first is to weight the two solutions with an a priori probability that is proportional to the Jacobian of the Lorentz transformation. The second is to select events for which the two solutions give pion energies differing by less than 10 MeV. The third consists of a fit to the matrix defined by entering each event according to the two solutions for t.

The three methods give consistent results, shown in Fig. 4. The curves are the prediction of the K^* dominance model, not fits to the data; pole form fits to the data give $M^* = 840 \pm 35$ MeV. A linear parametrization describes the data sufficiently well and gives the result $\lambda_+ = 0.031 \pm 0.0025$, substantially more accurate than the previous world average of 0.032 ± 0.004.

In the SLAC-Santa Cruz experiment, the Dalitz plot distribution of 1.6×10^6 $K_L \to \pi\mu\nu$ decays was studied to measure both F_+ and F_o. A wire spark chamber spectrometer was followed by 7.7 interaction lengths of lead to identify muons, and time of flight information was used to determine the K_L^o momentum. The Monte Carlo results for the detection efficiency over the Dalitz plot were studied in detail by very high statistics comparisons with experimental distributions. Radiative corrections were introduced in such a way that the effects of the detection efficiency were correctly included. Good fits to the data are obtained in both unparametrized and 2-parameter linear fits (Fig. 5). The results for the 2-parameter fit give $\lambda_+ = 0.030 \pm 0.003$ and $\lambda_o = 0.019 \pm 0.004$. This value for λ_+ is in excellent agreement with λ_+ from K_{e3}^o decays, and with $K^*(892)$ dominance of the vector form factor. The result $\lambda_o = 0.019 \pm 0.004$ is in excellent agreement with the Callan-Treiman prediction (14) yielding $F_o(M_K^2) = (1.25 \pm 0.04)\, F_+(0)$. A separate unparametrized fit for $\xi(t)$ gives -0.11 ± 0.04 with no apparent t dependence. Using (13), with λ_+ given by K^* dominance and λ_o by (15), $\xi(0)$ is predicted to be -0.02 ± 0.03, in good agreement with the SLAC-Santa Cruz experiment.

An important new aspect of these two experiments is that no significant limitation from statistics exists in the comparison of data and Monte Carlo distributions, with the consequence that systematic effects are more readily discovered and dealt with. The excellent agreement of these results with the theoretical expectations noted above contrasts sharply with the situation heretofore; based on an analysis in 1971 of the available data,[4] Chounet, Gaillard, and Gaillard concluded that quadratic terms were needed for F_+ and that $\lambda_o = -0.11 \pm 0.03$, four standard deviations away from (15).

These new values increase the discrepancy between Dalitz plot results and muon polarization results. In the past, the experimental studies of the muon polarization have given large negative $\xi(0)$ values, and an average of $\xi(0) = -2.0 \pm 0.7$ was obtained in the analysis of Chounet et al.[4] Recently, an experiment by a Yale-Argonne group[7] gave the result $\xi(0) = -0.51 \pm 0.11$ (for $\lambda_+ = 0.031$), increasing the average substantially, but still in disagreement with the SLAC-Santa Cruz $K_{\mu 3}^o$ Dalitz plot result at about the four standard deviation level.

III. CP VIOLATION AND $K_{S,L}^o$ DECAY PARAMETERS

The customary phenomenological description of CP violation defines the following quantities:[8]

$$\eta_{+-} \equiv \frac{\langle \pi^+\pi^- | H_{wk} | K_L^o \rangle}{\langle \pi^+\pi^- | H_{wk} | K_S^o \rangle} = |\eta_{+-}| e^{i\phi_{+-}} = \varepsilon + \varepsilon' , \tag{16}$$

$$\eta_{oo} \equiv \frac{\langle \pi^o \pi^o | H_{wk} | K_L^o \rangle}{\langle \pi^o \pi^o | H_{wk} | K_S^o \rangle} = |\eta_{oo}| e^{i\phi_{oo}} = \varepsilon - 2\varepsilon' . \tag{17}$$

The parameter ε describes the nonorthogonality of K_L^o and K_S^o:

$$K_L^o = \frac{1}{\sqrt{2(1+|\varepsilon|^2)}} \left[(1+\varepsilon)|K^o\rangle - (1-\varepsilon)|\bar{K}^o\rangle \right] \tag{18}$$

$$K_S^o = \frac{1}{\sqrt{2(1+|\varepsilon|^2)}} \left[(1+\varepsilon)|K^o\rangle + (1-\varepsilon)|\bar{K}^o\rangle \right] \tag{19}$$

and ε' describes CP violation in $K^o \to 2\pi$:

$$\varepsilon' = \frac{i}{\sqrt{2}} \, \mathrm{Im} \, \frac{A_2}{A_o} \, e^{i(\delta_2 - \delta_o)} \quad \text{, where}$$

$$A_o e^{i\delta_o} = \langle 2\pi(I=0) | H_{wk} | K^o \rangle \text{ , and}$$

$$A_2 e^{i\delta_2} = \langle 2\pi(I=2) | H_{wk} | K^o \rangle \text{ .}$$

There are six experimentally measurable quantities, namely, the magnitudes and phases of η_{+-} and η_{oo}, and the leptonic charge asymmetries δ_μ and δ_e in $K_L^o \to \pi^\pm \ell^\mp \nu$ decays:

$$\delta_\ell \equiv \frac{\Gamma(\ell^+) - \Gamma(\ell^-)}{\Gamma(\ell^+) + \Gamma(\ell^-)} = \frac{1 - |X|^2}{|1 - X|^2} \, 2\mathrm{Re}\,\varepsilon \tag{20}$$

A. Status of $|\eta_{+-}|$

Five optical spark chamber experiments from 1964-1967 gave results of excellent consistency (Fig. 6) and an average value of

$$|\eta_{+-}| = (1.96 \pm 0.03) \times 10^{-3} . \tag{21}$$

Pondrom justifiably concluded in 1971[1] that $|\eta_{+-}|$ was the best known parameter in the topic of CP violation. Recently, four new measurements have become available, also quite consistent among themselves, but their average differing from the old value by 11 standard deviations!

Typically, the determination of $|\eta_{+-}|$ involves the following quantities:

$$|\eta_{+-}|^2 = \frac{\text{Rate } (K_L^o \to \pi^+\pi^-)}{\text{Rate } (K_L^o \to \text{charged})} \times \frac{\text{Rate } (K_L^o \to \text{charged})}{\text{Rate } (K_L^o \to \text{all})}$$

$$\times \frac{\text{Rate } (K_S^o \to \text{all})}{\text{Rate } (K_S^o \to \pi^+\pi^-)} \times \frac{\Gamma_L}{\Gamma_S} \tag{23}$$

where just the first ratio is measured, the rest being obtained from available data. The noteworthy exception to this is a determination of $|\eta_{+-}|$ by a CERN-Heidelberg group who analysed the time dependence of the $\pi^+\pi^-$ intensity produced from an initial (predominantly) K^o state. In this case, the observed intensity is

$$I_{\pi^+\pi^-}(\tau) \propto \varepsilon\,(\tau,P)S(P)\Big[e^{-\Gamma_S\tau} + |\eta_{+-}|^2 e^{-\Gamma_L\tau}$$

$$+2D(P)|\eta_{+-}|e^{-\bar{\Gamma}\tau}\cos(\Delta m\tau+\phi_{+-})\Big] \tag{24}$$

Here ε expresses the dependence of the detection efficiency on the K^o momentum and proper time, $S(P)$ is the $K^o_{S,L}$ momentum spectrum, and $D(p)$ is a "dilution" factor accounting for the intensity contribution from a $\bar{K}^o$ initial state. Here K^o and $\bar{K}^o$ decay incoherently but give an interference term of the opposite sign:

$$D(P) = \frac{I(P) - \bar{I}(P)}{I(P) + \bar{I}(P)}, \quad .5 < D(p) < .85 \tag{25}$$

The data comprise some 6×10^6 $K^o_{S,L}$ decays, about 100 times that of previous experiments, and permit the simultaneous determination of $|\eta_{+-}|$, Γ_S, and ϕ_{+-}. The result from the fit is $|\eta_{+-}| = (2.30 \pm 0.035)\times10^{-3}$. A conventional measurement by the same group using (23) and K_{e3} decays for normalization gives the same result, $|\eta_{+-}| = (2.30 \pm 0.06)\times10^{-3}$.

The CERN-Heidelberg group[5] also reported a value for the K^o_S decay rate, $\Gamma_S=(1.119 \pm 0.006)\times10^{10}$ sec^{-1} in good agreement with the value 1.116 ± 0.006 from a recent high-statistics bubble chamber experiment.[9] The previous world average, $\Gamma_S=1.160 \pm 0.008$, is five standard deviations from the average of these two results, $\Gamma_S=1.1175 \pm 0.004$. The impact, however, of the change in Γ_S on measurements of $|\eta_{+-}|$ is small, increasing $|\eta_{+-}|$ by $\simeq 2\%$.

Taking the average of the four recent results, one obtains

$$|\eta_{+-}| = (2.29 \pm 0.026)\times10^{-3} \tag{26}$$

corresponding to an increase in the rate of 36% relative to (21). A plausible explanation for this dramatic shift is lacking, and if one shies away from the profound implications of a time-dependent η_{+-} (and/or Γ_S), the remaining alternative would seem to be a substantial embarrassment for experimentalists.

B. Status of ϕ_{+-}

Generally, measurements of ϕ_{+-} suffer from a sensitivity to the value of the K_L^0-K_S^0 mass difference Δm. In turn, most measurements of Δm depend somewhat on the Γ_S value assumed in the analysis of those data. If the new value of $\Gamma_S=(1.1175 \pm 0.004)\times 10^{10}$ sec^{-1} is utilized to correct the three most accurate results, $\Delta m/\hbar$ increases by $\simeq$ 0.6% to $(0.5436 \pm 0.004)\times 10^{10}$ sec^{-1}, a shift of about one standard deviation. The world average value $\phi_{+-} = (41.8 \pm 2.8)^\circ$ then becomes

$$\phi_{+-} \simeq (42.6 \pm 2.8)^\circ \tag{27}$$

This adjusted value is still suspect because some experiments have obtained results with Γ_S fixed at the old value, and the correlation of ϕ_{+-} and Γ_S is not negligible.

The CERN-Heidelberg group[5] have presented a new value for ϕ_{+-}, obtained from the fit to (24). The efficiency-corrected $\pi^+\pi^-$ intensity versus $K^0_{S,L}$ proper time is shown in figure 7, and the interference term isolated in the fit is shown in figure 8. The accuracy of the result is dominated at present by the dependence of the result on Δm:

$$\phi_{+-} = (48.3 \pm 1.0)^\circ + 300^\circ \times \frac{(\Delta m - 0.540)}{\Delta m} \tag{28}$$

Introducing the adusted Δm value and propagating the error, one obtains

$$\phi_{+-} = (50.3 \pm 2.4)^\circ \tag{29}$$

The lack of agreement between (27) and (29) is somewhat disturbing, but the χ^2 sum for the combined results of the relevant experiments is acceptable, and the best estimate is

$$\phi_{+-} \simeq (49.2 \pm 2.8)^\circ, \tag{30}$$

where the error has been increased by 20% to account for the discrepancies, and includes the Δm uncertainty.

C. Status of $|\eta_{oo}|$

Several measurements of $|\eta_{oo}|$ exist, with scattered results, and none has been reported recently. The average of these experiments, the neutral analogues of (23), is

$$|\eta_{oo}| = (2.26 \pm 0.20)\times 10^{-3} \tag{31}$$

where a scale factor of 1.5 has been applied to the error by the Particle Data Group (see fig. 6).

Two measurements of the ratio $|\eta_{oo}/\eta_{+-}|$ have also been reported,[11] in good agreement with each other and together yielding

$$|\eta_{oo}/\eta_{+-}| = 1.013 \pm 0.046 . \tag{32}$$

This value is in good agreement with the ratio of (31) and (26)

$$|\eta_{oo}/\eta_{+-}| = 0.987 \pm 0.088 \tag{33}$$

combining (33) and (32) gives finally

$$|\eta_{oo}/\eta_{+-}| = 1.007 \pm 0.040 \tag{34}$$

D. Status of ϕ_{oo}

A new result measuring the phase difference $\phi_{oo} - \phi_{+-}$ has been reported:[12]

$$\phi_{oo} - \phi_{+-} = (7.6 \pm 18)^{o}. \tag{35}$$

This value is obtained by combining results from separate regenerator studies for $K^{o}_{L,S} \to \pi^{+}\pi^{-}$ and $K^{o}_{L,S} \to \pi^{o}\pi^{o}$ decays. Combined with (30) and the previous world average (uncorrected for Δm),

$$\phi_{oo} = (43.3 \pm 19.2)^{o} \tag{36}$$

the new average is

$$\phi_{oo} = (50.4 \pm 13.2)^{o}. \tag{37}$$

E. Charge Asymmetries

Three new values have been reported recently, two at this conference. The same CERN-Heidelberg group[5] who have presented results for Γ_S, η_{+-}, ϕ_{+-}, and λ_{+}, have also presented definitive results for the $K_{\mu 3}$ and K_{e3} asymmetries. A BNL-Yale group[13] have measured the combined asymmetry using a new technique, and final results have become available for a measurement by a Princeton group.[14]

The CERN-Heidelberg group study the region at large proper time where interference effects have diminished sufficiently, and are left with 2×10^7 $K_{\mu3}$ and 4×10^7 K_{e3} decays after cuts. The "raw" asymmetries are

$$\delta_e = (3.65 \pm 0.17) \times 10^{-3},$$
$$\delta_\mu = (3.23 \pm 0.26) \times 10^{-3}, \tag{38}$$

to which a number of very tiny corrections are made, yielding

$$\delta_e = (3.51 \pm 0.18) \times 10^{-3},$$
$$\delta_\mu = (3.47 \pm 0.28) \times 10^{-3}. \tag{39}$$

These are the most accurate results to date by a considerable margin. No difference in the corrected asymmetries at any proper time is observed, providing evidence that $X_e = X_\mu$ (see (20), and removing the possibility that discrepancies between previously reported K_{e3} and $K_{\mu3}$ decays could be explained in this fashion.

The BNL-Yale group used a magnetic spectrometer employing multiwire proportional chambers, but no conventional particle identification. Instead, they employed a novel approach to the problem, identifying leptons statistically, noting that the decay pion characteristically carries more transverse momentum than the charged lepton. The price is a reduction of statistical sensitivity, but is offset by the advantage of a simpler apparatus and different systematics. The result,

$$\delta_\ell = (3.33 \pm 0.50) \times 10^{-3} \tag{40}$$

while of moderate precision, is very useful because all measurements of the charge asymmetry suffer from the absence of a means to "calibrate" the apparatus with adequate accuracy.

The Princeton group also employed a magnetic spectrometer with multiwire proportional chambers, but utilized a cerenkov counter to label electrons in a conventional way. A reanalysis of the data, removing a bias arising from the acceptance boundaries of the cerenkov yields a result in good agreement with the other experiments:

$$\delta_e = (3.18 \pm 0.38) \times 10^{-3} \tag{41}$$

All results for K_{e3} and $K_{\mu3}$ experiments are shown in figure 9. The averages of the electron and muon modes are

$$\delta_e = (3.39 \pm 0.14) \times 10^{-3}$$
$$\delta_\mu = (3.42 \pm 0.24) \times 10^{-3} \tag{42}$$

in good agreement with each other and with (40). The overall result for δ_ℓ, including (40), is then

$$\delta_\ell = (3.39 \pm 0.12) \times 10^{-3} \tag{43}$$

F. Conclusions

The graphical representation of the results (26), (30), (34), and (37), known as the Wu-Yang diagram, is given in figure 10. There is no evidence for a non-zero value of the parameter $\varepsilon' = (\eta_{+-} - \eta_{oo})/3$. The predicted phase of the superweak model, for which $\eta_{+-} \cong \eta_{oo} = \varepsilon$ and $\phi\varepsilon = \tan^{-1}(2\Delta m/\Gamma_S)$,

$$\phi_{s\omega} = (44.0 \pm 0.3)^\circ \tag{44}$$

is also shown, indicating a disagreement with (30) at the 2-standard deviation level.

The charge asymmetry δ_ℓ provides a check of the consistency of other results. Taking the real part of (17), and setting X = 0 in (20), one obtains

$$-\mathrm{Re}\,\varepsilon' = \frac{\delta}{2} - |\eta_{+-}|\cos(\phi_{+-}) = (0.21 \pm 0.10) \times 10^{-3} \tag{45}$$

suggesting a non-zero $R_e\varepsilon'$. On the other hand, if $\phi_{s\omega}$ is used to predict the charge asymmetry,

$$\delta = 2\,|\eta_{+-}|\,\cos(\phi_{s\omega}) = (3.30 \pm 0.04) \times 10^{-3} \tag{46}$$

then the agreement with (43) is good.

When confronted with irreconciliable conflicts between results bearing on the CP violation parameters, the author has taken the liberty of rejecting the older data. This viewpoint leads to a fairly consistent picture, but nevertheless, additional results of improved reliability and accuracy are badly needed, in particular for Δm and ϕ_{oo}. The physical basis of the phenomenon, after a decade of experimental effort, remains unknown.

IV. THE $K_L^o \to \mu^+\mu^-$ PROBLEM

This decay, which could occur as a direct manifestion of weak neutral currents, can also be generated by the combined effects of conventional first-order weak plus second-order electromagnetic interactions. The consequence of the latter process is to place a lower bound on the decay rate.

$$\frac{\Gamma(K_L^o \to \mu^+\mu^-)}{\Gamma(K_L^o \to \mathrm{All})} \geq 5.3 \times 10^{-9}, \tag{47}$$

known as the Primitive Unitarity Limit.

The limit (47) is derived with the assumptions of unitarity, CP and CPT conservation, conventional quantum electrodynamics for the coupling $\gamma\gamma \to \ell^+\ell^-$, a negligible absorptive part of the amplitude for $K_L^o \to \gamma\gamma$, and dominance of the two-photon intermediate state in the unitarity sum. Finally, the experimental result for the rate $K_L^o \to \gamma\gamma$ is needed.

A very surprising result, contradicting (47), was published in 1971 by a Berkeley group[15] placing a 90% confidence level upper bound

$$\frac{\Gamma(K_L^o \to \mu^+\mu^-)}{\Gamma(K_L^o \to \text{All})} < 1.8 \times 10^{-9} \tag{48}$$

with no observed events.

As this result is very difficult to accomodate theoretically without new particles or interaction mechanisms, the experiment has been repeated by a Columbia-CERN-NYU group[16] at the BNL AGS, and is being undertaken by other groups as well. The Columbia-CERN-NYU experiment yielded six events satisfying their criteria for the decay, with background contribution 0.25 ± 0.15 events, and a branching ratio compatible with (47):

$$\frac{\Gamma(K_L^o \to \mu^+\mu^-)}{\Gamma(K_L^o \to \text{All})} = 11\,^{+10}_{-5} \times 10^{-9} \text{ (90\% C. L.)} \tag{49}$$

Both experiments utilize the kinematically similar decay $K_L^o \to \pi^+\pi^-$ to determine the K_L^o flux, and both values (48) and (49) are based on the old value (21) for $|\eta_{+-}|$. A subsequent reanalysis of the Berkeley data, correcting some errors, yields a higher limit (no events discovered)[17]:

$$\frac{\Gamma(K_L^o \to \mu^+\mu^-)}{\Gamma(K_L^o \to \text{All})} < 2.5 \times 10^{-9} \text{ (90\% C. L.)} \tag{50}$$

Adjusting (49) and (50) for the newer $|\eta_{+-}|$ (26), one has finally

$$\frac{\Gamma(K_L^o \to \mu^+\mu^-)}{\Gamma(K_L^o \to \text{All})} < 3.4 \times 10^{-9} \text{ (Berkeley)} \tag{51}$$

$$\frac{\Gamma(K_L^o \to \mu^+\mu^-)}{\Gamma(K_L^o \to \text{All})} = 14\,^{+13}_{-7} \times 10^{-9} \text{ (Columbia)} \tag{52}$$

According the Columbia value, the Berkeley data should have contained 9 events, a result which is independent of $|\eta_{+-}|$. As the work on these experiments is completed, the discrepancy between these two experiments has little chance of alleviation.

A new experimental result, however, has been reported at this conference supporting the existence of the decay at an appropriate rate[18]. This work is an extension of the technique employed by the Columbia-CERN-NYU group, and is designed to meet some criticisms applicable to the first result.

The modified apparatus of the Columbia-CERN-BNL experiment is shown in Fig. 11. An additional muon hodoscope has been installed to improve background rejection, and a different spectrometer setting, corresponding to 240 MeV/c rather than the 210.6 MeV/c of the previous experiment, has been employed. The latter change guarantees that any possible geometric pecularities of the apparatus creating a "background to $K_L^o \to \mu\mu$" leakage channel cannot lead to the same event distribution.

The data are shown in figure 12, displayed versus invariant mass and the angle defined by the incident K_L^o direction and the visible momentum. The background is understood in terms of $K_L^o \to \pi\mu\nu$ decays in which the second muon signature is completed by π decay or by penetration of the concrete and steel. Three events survive the 2-standard deviation cuts in mass and angle, and correspond to a branching ratio (using (26))

$$\frac{\Gamma(K_L^o \to \mu^+\mu^-)}{\Gamma(K_L^o \to \text{All})} = 9\,^{+13}_{-7} \times 10^{-9} \text{ (90\% C. L.)} \tag{53}$$

with a background level similar to that of the Columbia-CERN-NYU result.

The two experiments can be combined, with the resulting mass distribution shown in Fig. 13. The final averaged branching ratio for the 9 events is

$$\frac{\Gamma(K_L^o \to \mu^+\mu^-)}{\Gamma(K_L^o \to \text{All})} = 12^{+8}_{-4} \times 10^{-9} \text{ (90\% C. L.)} \tag{54}$$

in good agreement with (47).

One of the most interesting suggestions to deal with the problems raised by the Berkeley result is that of Christ and Lee[19], who propose that a cancellation of the amplitude leading to (47) can be arranged if an anomalously large $K_S^o \to \mu^+\mu^-$ rate exists.

The required interference necessarily involves CP violation in at least one of the amplitudes $K_S^o \to \mu^+\mu^-$, or $K_{S,L}^o \to \gamma\gamma$. The most economical realization of the Christ-Lee mechanism is that of Dass and Wolfenstein[20], who propose a model incorporating the anomalous rate and the CP violation in a direct $K_S^o \to \mu^+\mu^-$ coupling. The anomalously large rate is a consequence of the smallness of ε, which couples K_L^o and K_S^o and permits interference to occur. To give the Berkeley result, the $K_S^o \to \mu^+\mu^-$ rate is bounded by

$$\Gamma(K_S^o \to \mu^+\mu^-) \geq \frac{[A\ (\text{Unitarity}) - A\ (\text{Berkeley})]^2}{(\text{Re}\varepsilon)^2} \tag{55}$$

where A(unitarity) corresponds to the amplitude leading to (47), and A(Berkeley) corresponds to the amplitude limit implied by the Berkeley result. In 1971, using (48) and (21), (55) yielded

$$\frac{\Gamma(K_S^o \to \mu^+\mu^-)}{\Gamma_S} \geq 10.0 \times 10^{-7} \tag{56}$$

At present, using (51) and (26), (55) gives

$$\frac{\Gamma(K_S^o \to \mu^+\mu^-)}{\Gamma_S} \geq 1.7 \times 10^{-7}. \tag{57}$$

Consequently, an upper bound reported recently by the CERN-Heidelberg group,[21]

$$\frac{\Gamma(K_S^o \to \mu^+\mu^-)}{\Gamma_S} > 3.1 \times 10^{-7}\ (90\%\ \text{C. L.}) \tag{58}$$

no longer rules out this possiblity as an explanation of the Berkeley result. On the other hand, the present discrepancy between (47) and (41) is now much smaller than before, implying only a 20% cancellation of the unitarity amplitude. The significance of the effect is consequently of the same order as the validity of the assumption that the unitarity sum is dominated completely by the $\gamma\gamma$ intermediate state, for which some authors have calculated as much as a 10% uncertainty due to other real intermediate states such as $\pi\pi\gamma$.[21] The likelihood that an exotic possibility such as $K_S^o \to \mu\mu$ is responsible seems therefore somewhat diminished, but the new experiments underway will hopefully settle the controversy.

*Work supported by the U. S. Atomic Energy Commission.

REFERENCES

1. Lee G. Pondrom, "Experimental Review of Weak Interactions", in AIP Conference Proceedings, No. 2, Particles and Fields - 1971, p. 151-180 (1971).

2. O. Fackler, D. Frisch, J. Martin, G. Smoot, and L. Sompayrac, Conference Contribution #8, and Phys. Rev. Letters, 31, 847 (1973).

3. World averages are those compiled by the Particle Data Group, as presented in Rev. Mod. Phys. 45 Supplement, April (1973).

4. L-M. Chounet, J-M. Gaillard, and M. K. Gaillard, Physics Reports 4, 199-324 (1972).

5. G. Geweniger, S. Gjesdal, T. Kamae, G. Presser, P. Steffen, J. Steinberger, F. Vanucci, H. Wahl, F. Eisele, H. Filthuth, K. Kleinknecht. V. Lüth, G. Zech, Conference Contributions #151-153. The authors emphasize that the values given here must be considered preliminary as the analysis is continuing; final results when published may accordingly differ slightly from those quoted in this report.

6. G. Donaldson, D. Fryberger, D. Hitlin, J. Lin, B. Meyer, R. Piccioni, A. Rothenberg, D. Uggla, S. Wojcicki, and D. Dorfan, Phys. Rev. Letters 31, 325 (1973).

7. J. Sandweiss, J. Sunderland, W. Turner, W. Willis, and L. Keller, Phys. Rev. Letters 30, 1002 (1973). The result given by these authors is Re $\xi(o)=-0.385 \pm 0.105 - 6.0\lambda_+$.

8. T. T. Wu and C. N. Yang, Phys. Rev. Letters 13, 380 (1964).

9. O. Skjeggestad, F. James, L. Montanet, E. Paul, P. Saetre, D. M. Sendall, G. Burgun, E. Lesquoy, A. Muller, E. Paul, S. Zylberajch, Nuc, Phys. B48, 343 (1972).

10. The stated correlations of Δm and τ_S are: +1/2 for the result $\Delta m=0.542 \pm 0.006$ of Aronson et al., Phys. Rev. Letters 25, 1057 (1970); -1/30 for the result $\Delta m-0.534 \pm 0.007$ of Carnegie et al., Phys. Rev. D6, 2335 (1971), and Ph.D thesis of L. Sulak, Princeton University, 1971; 0.0 for the result $\Delta m= 0.542 \pm 0.006$ of Cullen et al., Physics Letters 32B, 523 (1970).

11. M. Banner, J. W. Cronin, C. H. Hoffman, B. C. Kanpp, and M. J. Shochet, Phys. Rev. Letters 28, 1597 (1972); and H. Holder, E. Radermacher, A. Staude, P. Darriulat, J. Deutsch, M. Hansroul, S. Orito, J. Pilcher, C. Rubbia, P. Strolin, K. Tittel, A. Fainberg, C. Grosso-Pilcher, and M. Scire, Physics Letters 40B, 141 (1972).

12. G. Barbiellini, P. Darriulat, A. Fainberg, M. Holder, G. Maderni, S. Orito, E. Radermacher, C. Rubbia, A. Staude, P. Strolin, and K. Tittel, Physics Letters 43B, 529 (1973).

13. H. H. Williams, R. C. Larsen, L. B. Leipuner, W. W. Sapp, A. L. Sessoms, L. W. Smith, R. K. Adair, and R. C. Turner, Conference Contribution #58.

14. V. Fitch, V. Hepp, D. Jensen, M. Strovink, and R. C. Webb, Abstract submitted to Rochester 1971 Conference, and for final result, M. Strovink, private communication.

15. A. R. Clark, T. Elioff, R. C. Field, H. J. Frisch, R. P. Johnson, L. T. Kerth, and W. A. Wenzel Phys. Rev. Letters 26, 1667 (1971).

16. W. C. Carithers, T. Modis, D. R. Nygren, T. P. Pun, E. L. Schwartz, H. Sticker, J. Steinberger, P. Weilhammer, and J. H. Christenson, Phys. Rev. Letters 30, 1336 (1973).

17. Priviate communication from R. C. Field and L. T. Kerth; also reported at APS meeting in Washington, D. C. April 30 - May 2, 1973.

18. W. C. Carithers, D. R. Nygren, H. A. Gordon, M. L. Ioffredo, Kwan-Wu Lai, and Peter Weilhammer, submitted to Phys. Rev. Letters.

19. N. Christ and T. D. Lee, Phys. Rev. D4, 209 (1971).

20. G. V. Dass and L. Wolfenstein, Physical Letters 38B, 435 (1972).

21. M. K. Gaillard, Phys. Letters 35B, 431 (1971) See also H. Stern and M. K. Gaillard, Annals of Physics 76, 580 (1973) for a review of the theoretical implications.

REFERENCES FOR λ_+ FROM $K_L^0 \to \pi\varepsilon\nu$

1. Geweniger et al., Conference contribution #153

2. Brandenburg et al., Conference contribution #73

3. Buchanan et al., Conference contribution #169

4. Neuhofer et al., Physics Letters 41B, 642 (1972)

5. Dally et al., Physics Letters 41B, 647 (1972)

6. Bisi et al., Physics Letters 36B, 533 (1971)

7. Basile et al., Physics Letters 26B, 542 (1968)

8. Aronson et al., Phys. Rev. Letters 20, 287 (1968)

9. Kadyk et al., Phys. Rev. Letters 19, 597 (1967)

10. Firestone et al., Phys. Rev. Letters 18, 176 (1967)

REFERENCES FOR $|\eta_{+-}|$

1. Geweniger et al., Conference contribution #151 $|\eta_{+-}| = (2.30 \pm 0.06)\times10^{-3}$, measured by conventional ratio method, eq. 23.

2. Geweniger et al., Conference contribution #151 $|\eta_{+-}| = (2.30 \pm 0.035)\times10^{-3}$, obtained from the fit to eq. 24.

3. S. Aronson, private communication. A preliminary result by conventional ratio method: $|\eta_{+-}| = (2.38 \pm 0.15)\times10^{-3}$

4. R. Messner et al., Phys. Rev. Letters 30, 876 (1973). $|\eta_{+-}| = (2.25 \pm 0.05)\times10^{-3}$

5. V. Fitch et al., Phys. Rev. 164, 1711 (1967) $|\eta_{+-}| = (1.91 \pm 0.06)\times10^{-3}$

6. M. Bott-Bodenhausen et al., Physics Letters 23, 277 (1966), $|\eta_{+-}| = (1.87 \pm 0.08)\times10^{-3}$

7. M. Bott-Bodenhausen et al., Physics Letters 23, 277 (1966) $|\eta_{+-}| = (1.93 \pm 0.04)\times10^{-3}$

8. Basile et al., Balaton Conference, $|\eta_{+-}| = (1.86 \pm 0.20)\times10^{-3}$

9. W. Galbraith et al., Phys. Rev. Letters 14, 383 (1965). $|\eta_{+-}| = (2.02 \pm 0.17)\times10^{-3}$

10. J. H. Christenson et al., Phys. Rev. Letters 13, 138 (1964) $|\eta_{+-}| = (1.94 \pm 0.20)\times10^{-3}$

REFERENCES FOR $K_L^0 \to \pi \ell \nu$ CHARGE ASYMMETRY

1. Geweniger et al., Conference contribution #152 $\delta = (3.51 \pm 0.18) \times 10^{-3}$ see ref. 5.

2. Fitch et al., see ref. 14
$\delta = (3.18 \pm 0.38) \times 10^{-3}$

3. Ashford et al., Physics Letters 38B, 47 (1972)
$\delta = (3.6 \pm 1.8) \times 10^{-3}$

4. Marx et al., Physics Letters 32B, 219 (1970)
$\delta = (3.46 \pm 0.33) \times 10^{-3}$

5. Bennett et al., Phys. Rev. Letters 19, 993 (1967) and H. Saal, Ph.D thesis, Columbia University
$\delta = (2.46 \pm 0.59) \times 10^{-3}$

6. Williams et al., Conference contribution #58
$\delta = (3.33 \pm 0.50) \times 10^{-3}$

7. Geweniger et al., Conference contribution #152
$\delta = (3.47 \pm 0.28) \times 10^{-3}$

8. Piccioni et al., Phys. Rev. Letters 29, 1412 (1972)
$\delta = (2.78 \pm 0.51) \times 10^{-3}$

9. McCarthy et al., Phys. Rev. D7, 687 (1973)
$\delta = (6.0 \pm 1.4) \times 10^{-3}$

10. M. A. Paciotti, Ph.D thesis, UCRL-19446, Lawrence Berkeley Laboratory, Dec. 1969 (unpublished)
$\delta = (5.8 \pm 1.7) \times 10^{-3}$

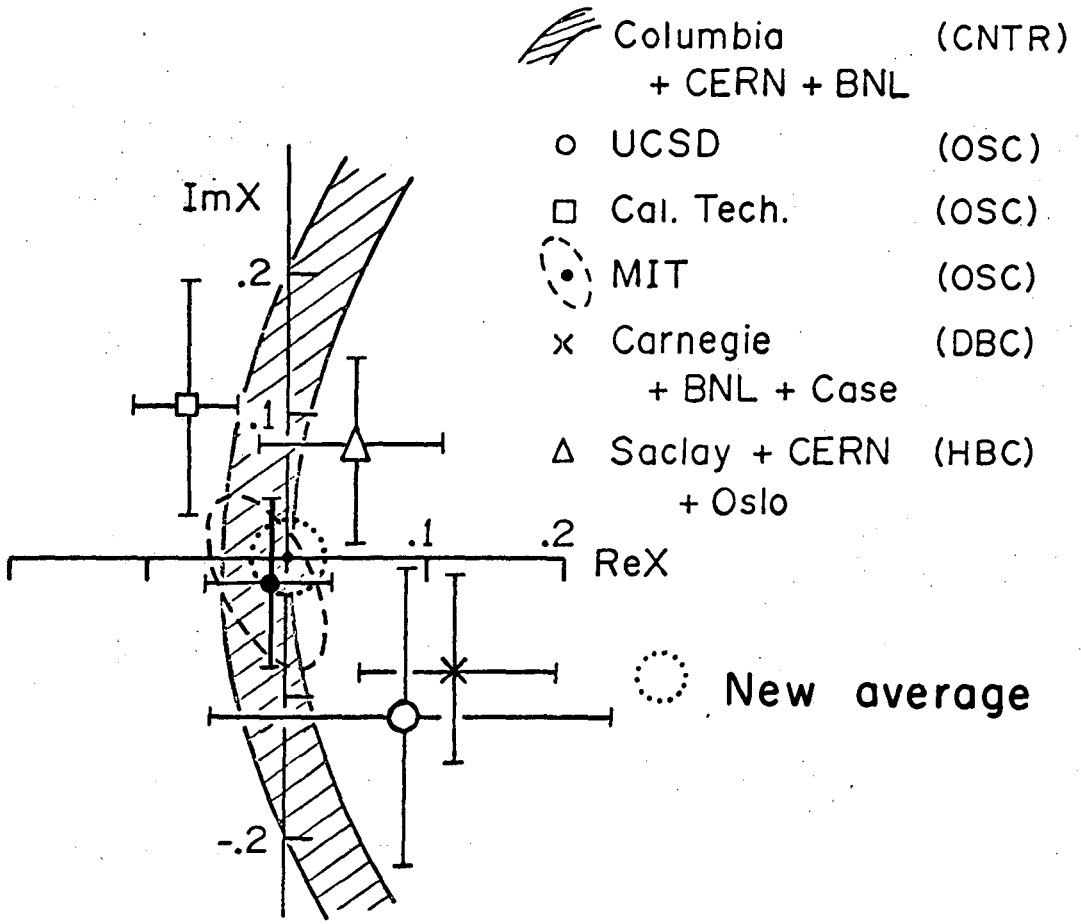

Fig. 1. Recent results for $\Delta S=-\Delta Q$ amplitudes including the new MIT result. Also shown is a new world average incorporating the MIT result.

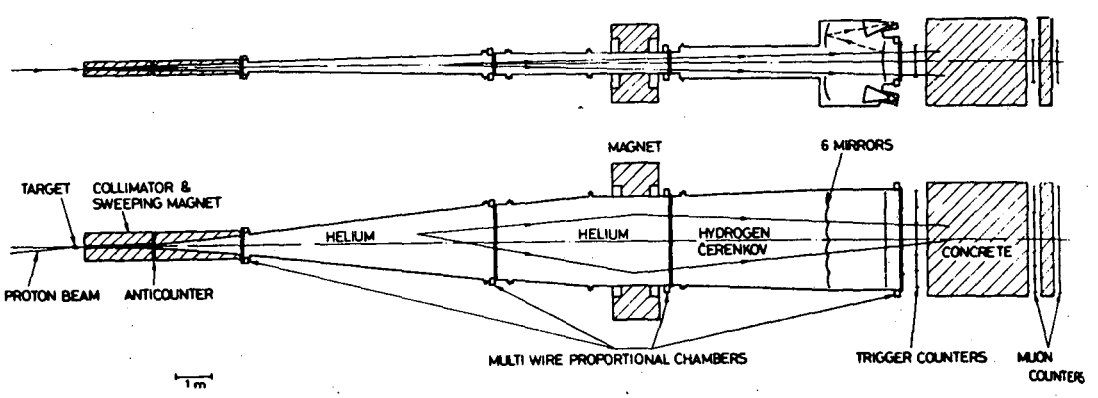

Fig. 3. View of the CERN-Heidelberg apparatus.

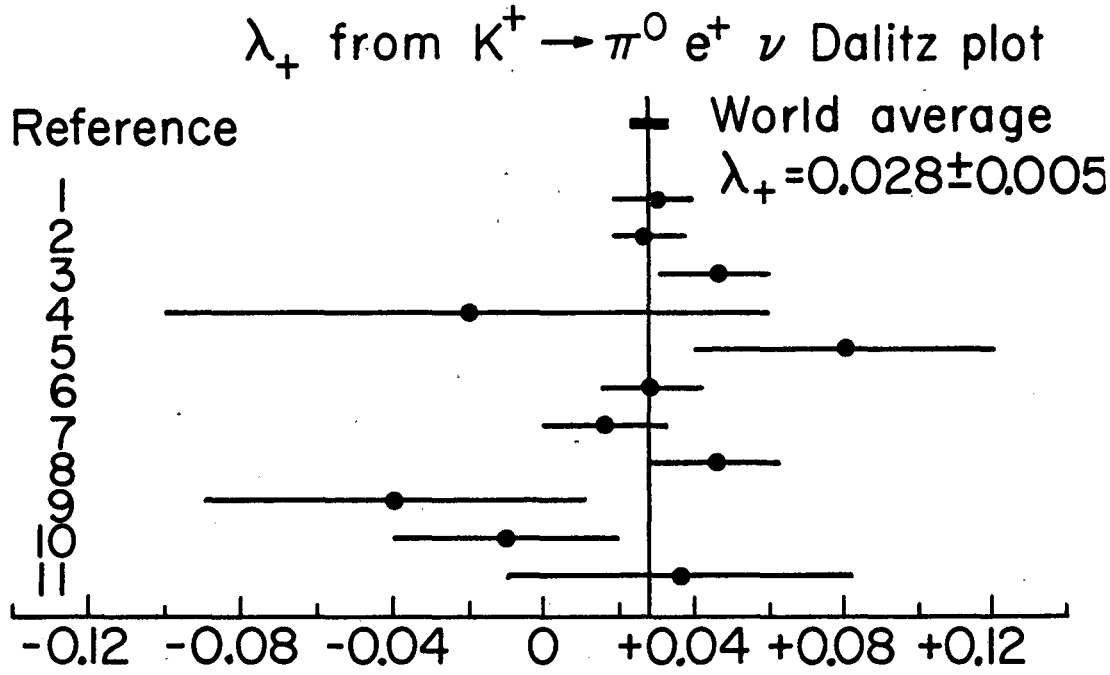

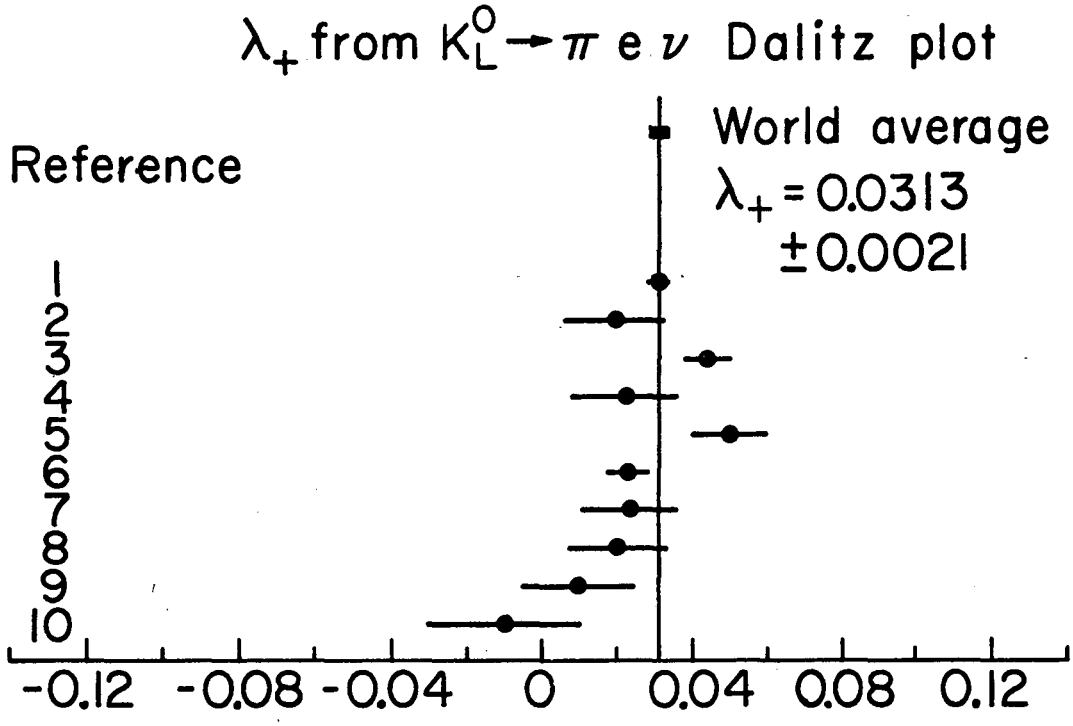

Fig. 2. Comparison of λ_+ results for K^0 and K^+ decays.

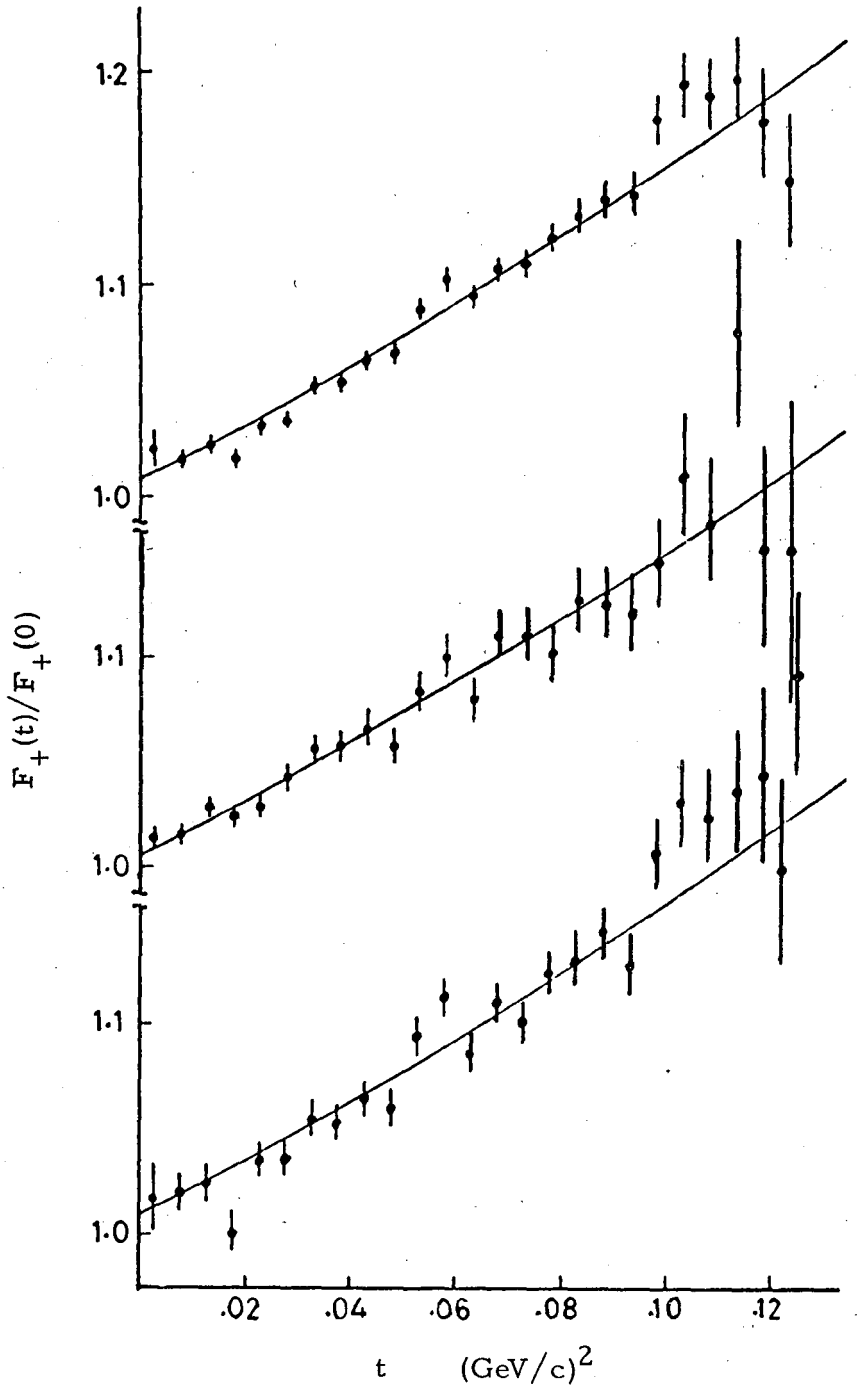

Fig. 4. CERN-Heidelberg data for λ_+ from $K_L^0 \to \pi e \nu$ decays. Top curve-weighted solutions; middle curve - $|\Delta T_\pi| < 10$ MeV; bottom curve - fit of matrix. The curves are the prediction of the $K^*(892)$ dominance model.

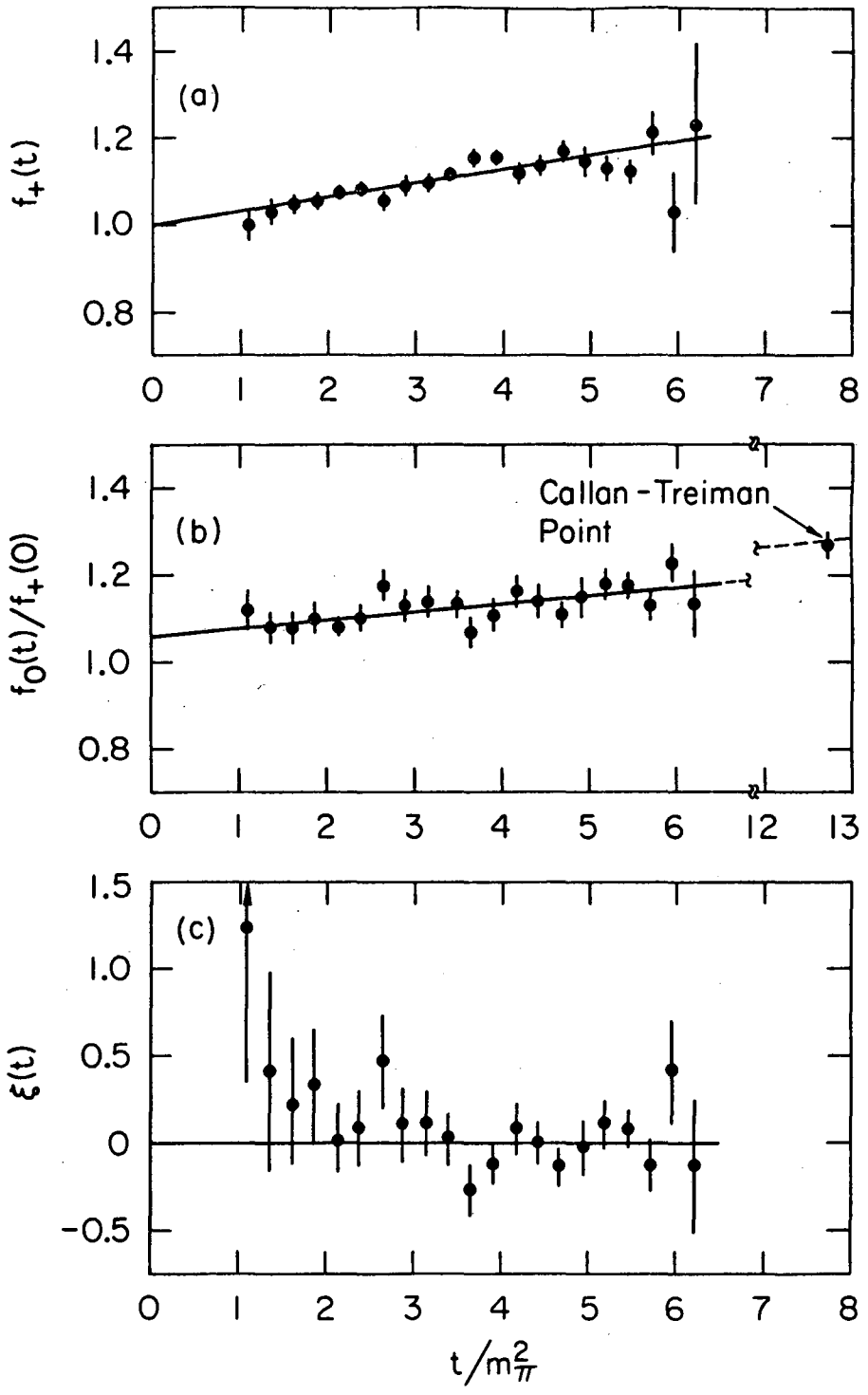

Fig. 5. SLAC-Santa Cruz results for $F_+(t)$, $F_0(t)$, and $\xi(t)$.

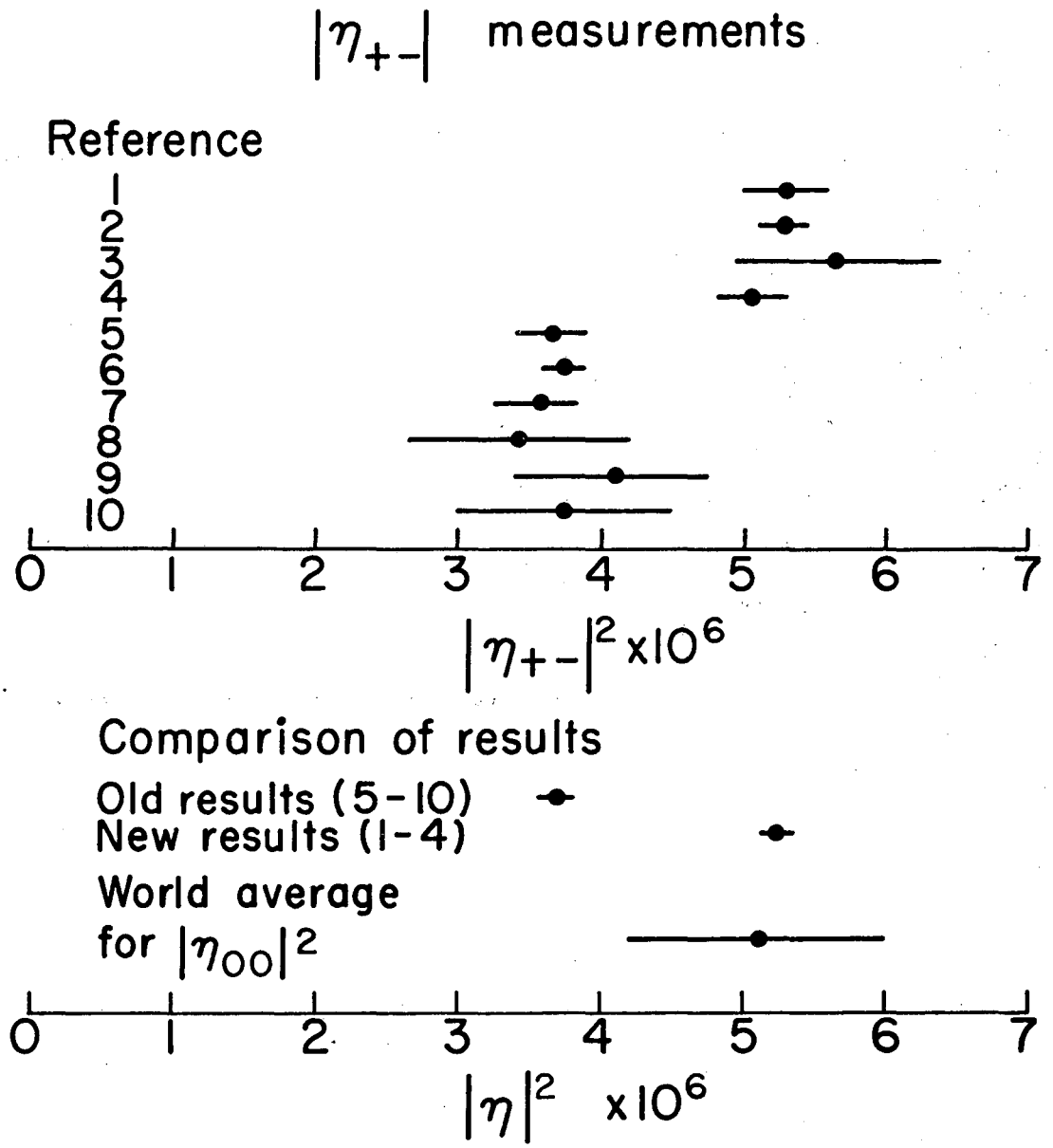

Fig. 6. Old and new measurements of $|\eta_{+-}|$, shown squared to correspond more closely to what all experiments except Ref. 2 actually measure. Also shown is the world average for $|\eta_{00}|^2$.

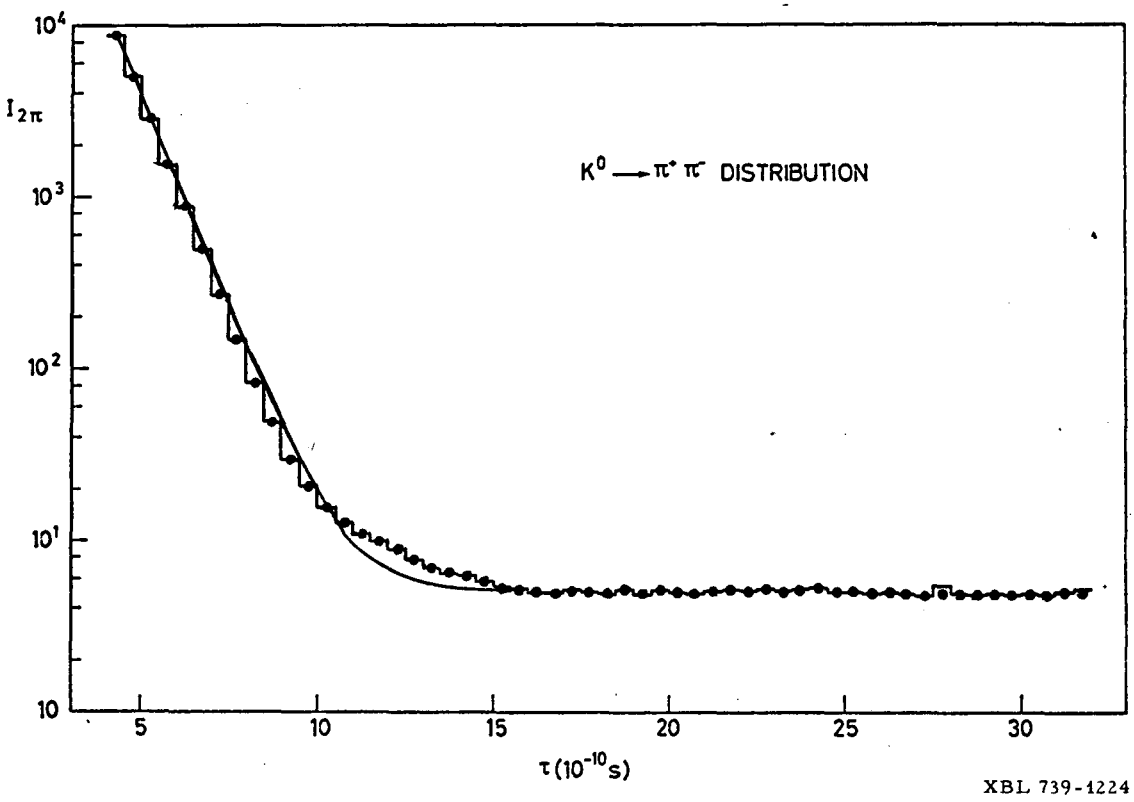

Fig. 7. $K^o \rightarrow \pi^+\pi^-$ intensity versus proper time, corrected for efficiency, and showing prominent constructive interference around $\tau \approx 12 \times 10^{-10}$ sec. Data is from CERN-Heidelberg group contribution, Ref. 5.

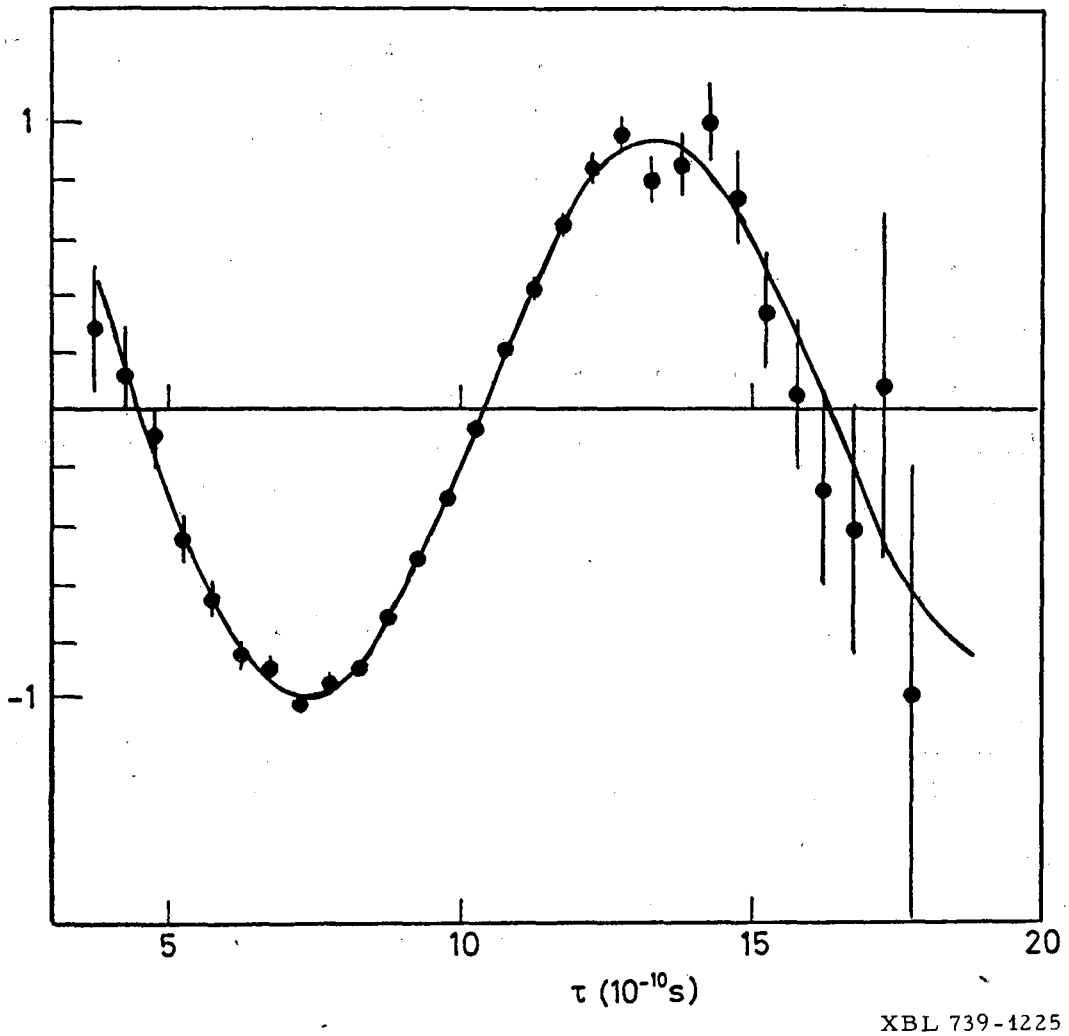

Fig. 8. Isolated interference term of the data shown in Fig. 7.

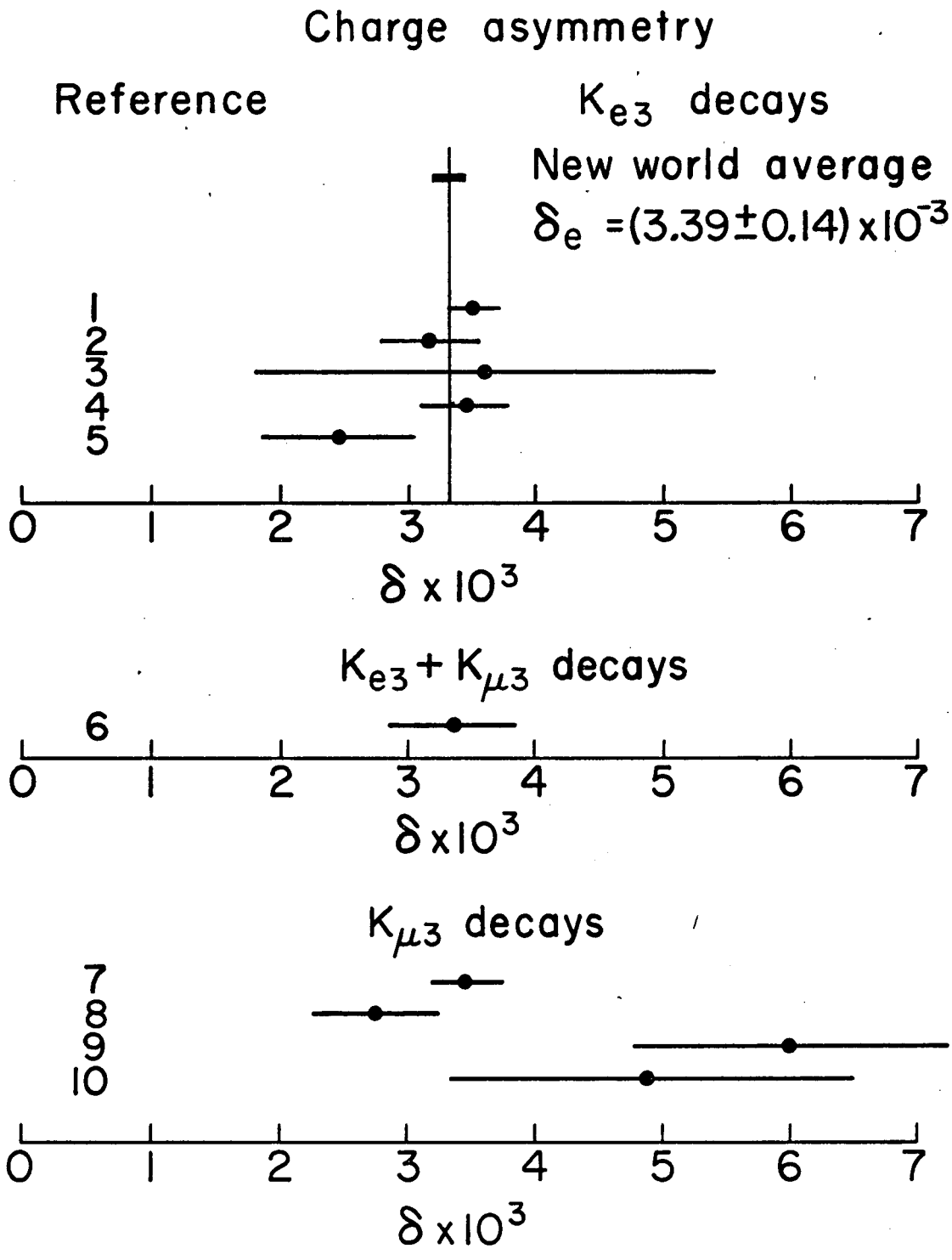

Fig. 9. Results for the charge asymmetry in $K_L^0 \to \pi \ell \nu$ decays.

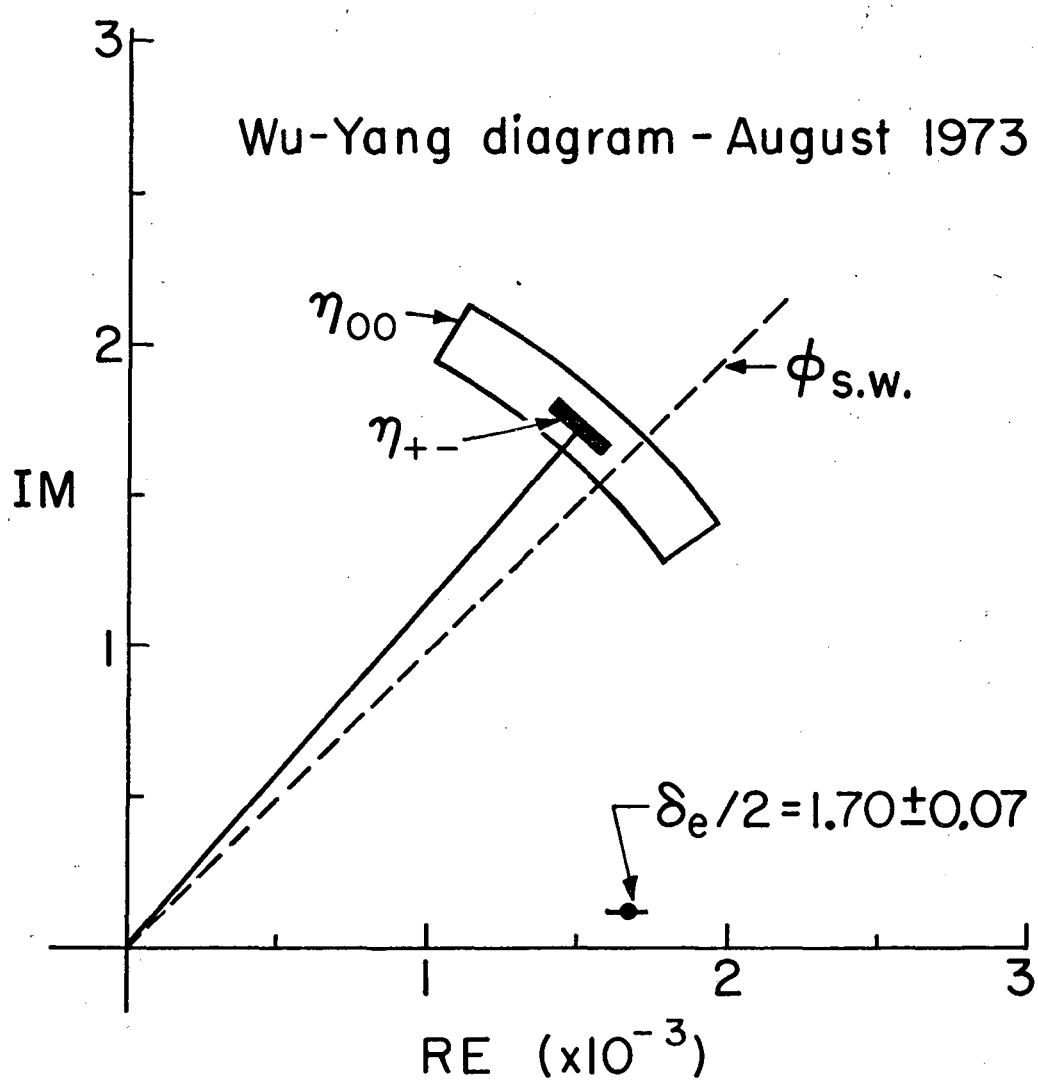

Fig. 10. The Wu-Yang diagram, showing η_{+-} and η_{00} in the complex plane. Also given are the phase angle $(44.0 \pm 0.3)^{\circ}$ of the super-weak model and the experimental results for $\mathrm{Re}\,\varepsilon = \delta/2$.

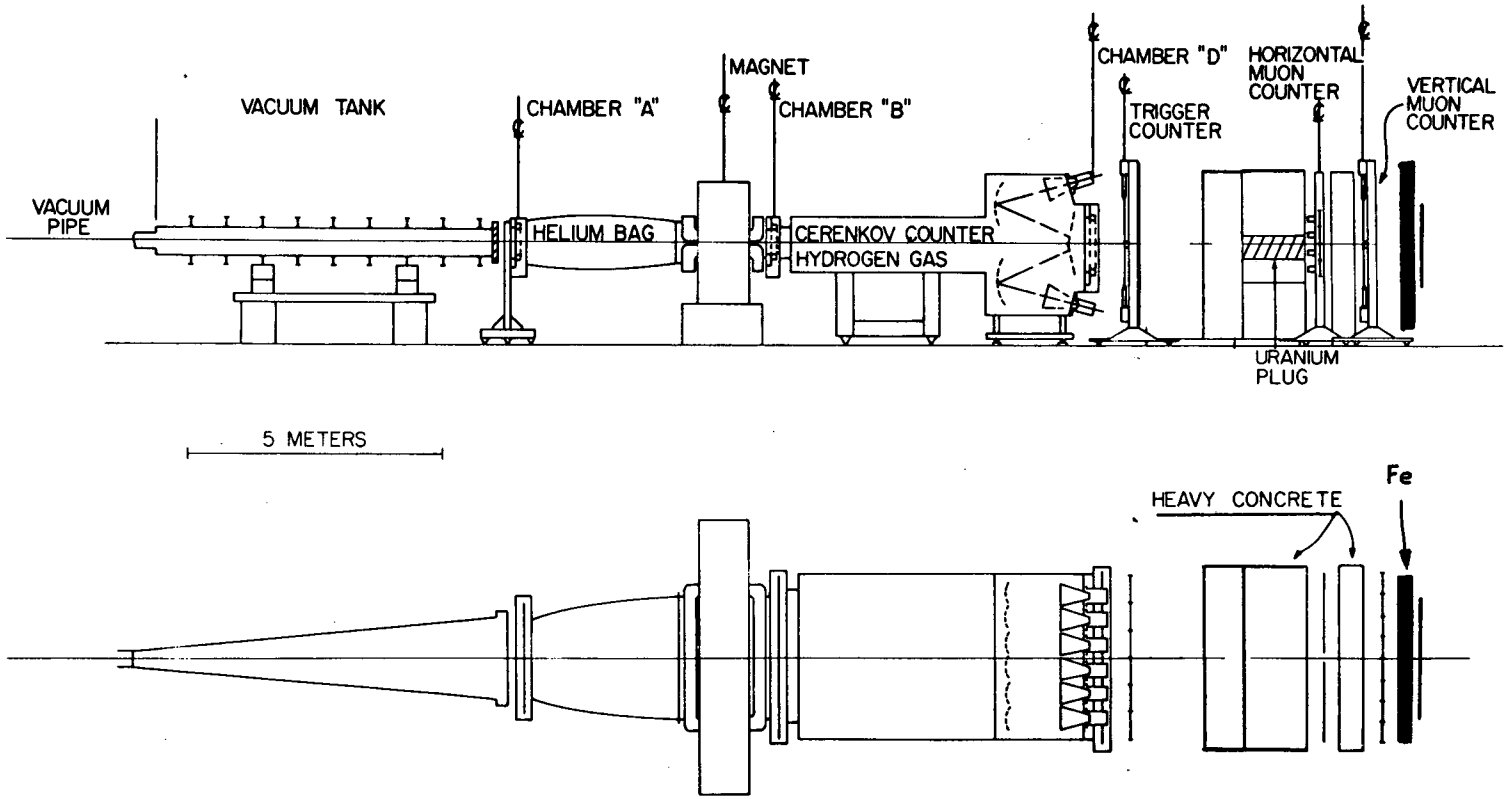

Fig. 11. Diagram of the apparatus used by a Columbia-CERN-BNL collaboration to search for $K_L^0 \to \mu^+ \mu^-$. The new hodoscope consists of 23 scintillators mounted behind a 2-inch thick steel plate.

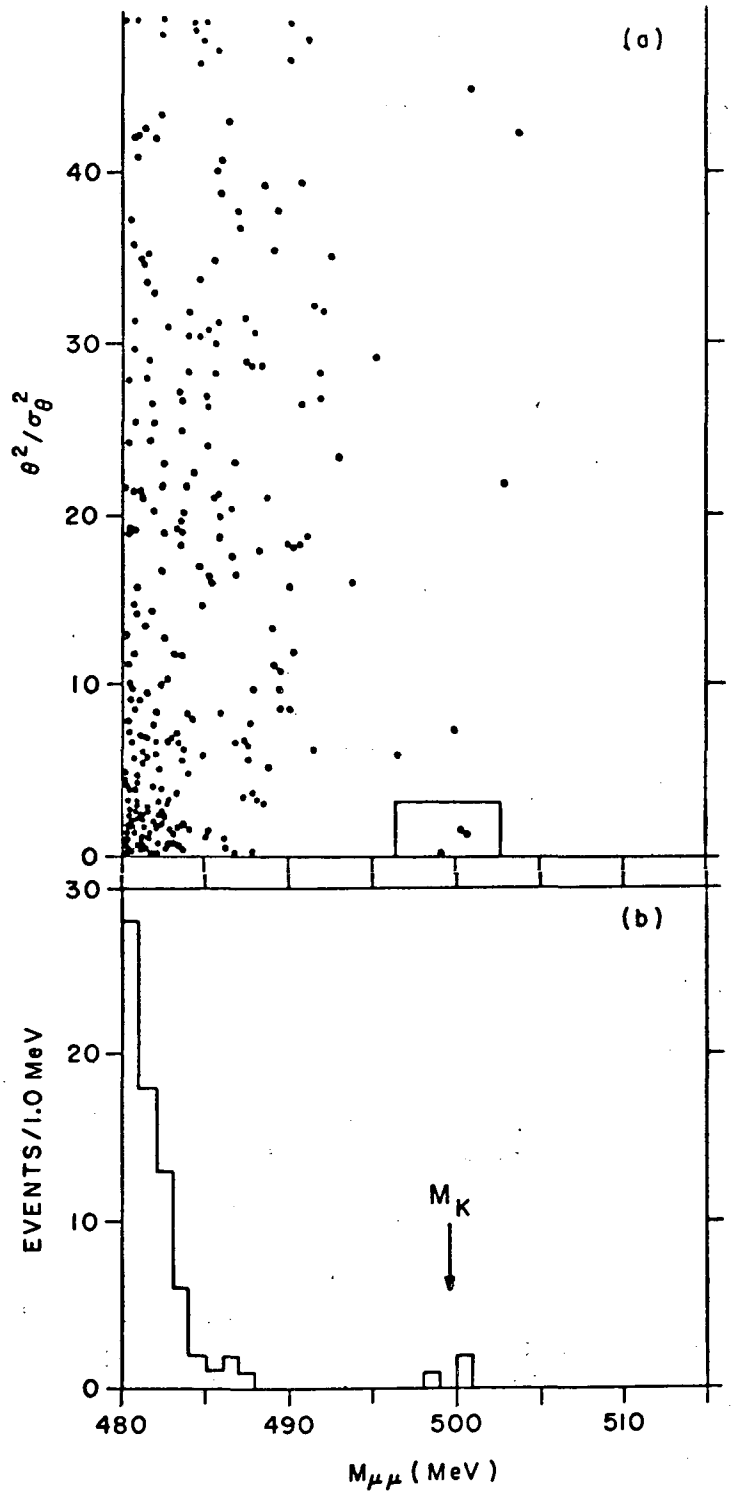

Fig. 12. Data obtained by the Columbia-CERN-BNL collaboration. 9) $M\mu\mu$ versus K_L^0 angle scatter plot, showing three events within the accepted region, b) Projection of the data on the $M\mu\mu$ axis, for angles smaller than 3 (units of θ^2/σ^2).

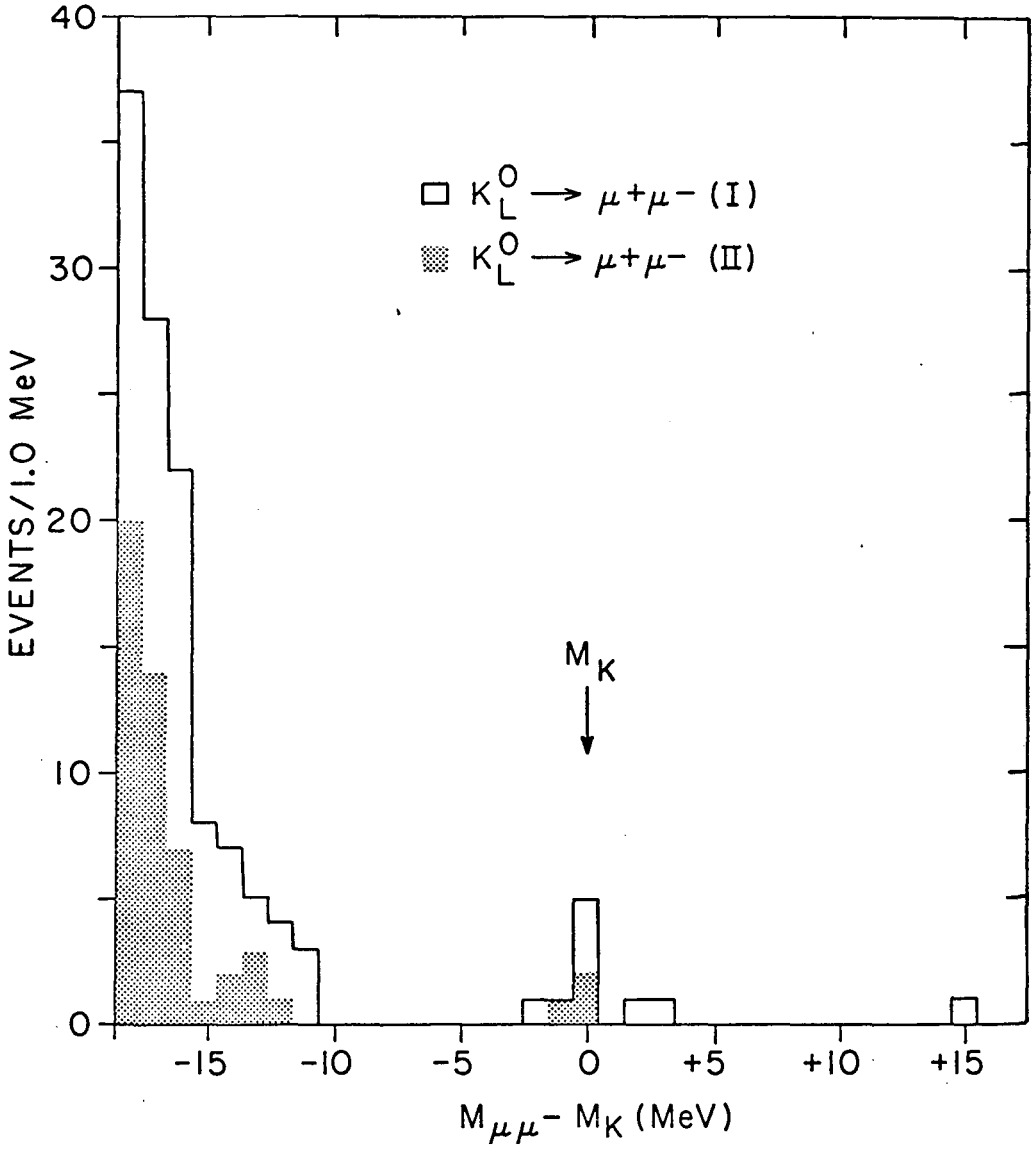

Fig. 13. Combined data of the Columbia-CERN-NYU (I) and Columbia-CERN-BNL (II) experiments showing nine events at the K^0 mass.

LEGAL NOTICE

This report was prepared as an account of work sponsored by the United States Government. Neither the United States nor the United States Atomic Energy Commission, nor any of their employees, nor any of their contractors, subcontractors, or their employees, makes any warranty, express or implied, or assumes any legal liability or responsibility for the accuracy, completeness or usefulness of any information, apparatus, product or process disclosed, or represents that its use would not infringe privately owned rights.

TECHNICAL INFORMATION DIVISION
LAWRENCE BERKELEY LABORATORY
UNIVERSITY OF CALIFORNIA
BERKELEY, CALIFORNIA 94720