LBL-24214 c.2
UC-95d

Lawrence Berkeley Laboratory
UNIVERSITY OF CALIFORNIA

APPLIED SCIENCE DIVISION

RECEIVED
LAWRENCE
BERKELEY LABORATORY

JUL 6 1988

LIBRARY AND
DOCUMENTS SECTION

FY 1987 Annual Report

Building Energy Systems Program

March 1988

TWO-WEEK LOAN COPY
This is a Library Circulating Copy
which may be borrowed for two weeks.

APPLIED SCIENCE
DIVISION

LBL-24214 c.2

Prepared for the U.S. Department of Energy under Contract Number DE-AC03-76SF00098.

DISCLAIMER

This document was prepared as an account of work sponsored by the United States Government. While this document is believed to contain correct information, neither the United States Government nor any agency thereof, nor the Regents of the University of California, nor any of their employees, makes any warranty, express or implied, or assumes any legal responsibility for the accuracy, completeness, or usefulness of any information, apparatus, product, or process disclosed, or represents that its use would not infringe privately owned rights. Reference herein to any specific commercial product, process, or service by its trade name, trademark, manufacturer, or otherwise, does not necessarily constitute or imply its endorsement, recommendation, or favoring by the United States Government or any agency thereof, or the Regents of the University of California. The views and opinions of authors expressed herein do not necessarily state or reflect those of the United States Government or any agency thereof or the Regents of the University of California.

LBL-24214

APPLIED SCIENCE DIVISION ANNUAL REPORT

BUILDING ENERGY SYSTEMS PROGRAM

FY 1987

Elton J. Cairns
Head, Applied Science Division
and
Associate Director, LBL

Michael A. Wahlig
Program Leader, Building Energy Systems Program

Applied Science Division
Lawrence Berkeley Laboratory
University of California
Berkeley, California 94720

Prepared for the U.S. Department of Energy under Contract No. DE-AC03-76SF00098

CONTENTS

Introduction 4-1

Simulation Research
F.C. Winkelmann, B.E. Birdsall, W.F. Buhl, K.L. Ellington, A.E. Erdem, D.J. Hopkins, J.M. Nataf, O. Nour-Omid, and E.F. Sowell 4-2

Building System Analysis
R.C. Kammerud, B. Andersson, B. Birdsall, W.L. Carroll, D. Dumortier, B. Erwine, B. Hatfield, R.J. Hitchcock, B. Lebot, J. Noring, A. Seager, and E. Vine 4-8

Active Solar Cooling
M. Wahlig, J. Rasson, M. Warren, and I. Parmaksizoglu 4-16

Monitoring of Commercial Buildings
M. Warren 4-18

Publications List 4-20

BUILDING ENERGY SYSTEMS PROGRAM STAFF

Michael A. Wahlig, Program Leader

Brandt Andersson
Bruce Birdsall
Fred Buhl
William Carroll
Dominique Dumortier
Kathleen Ellington
Ahmet Erdem
Barbara Erwine
Brenda Hatfield
Robert Hitchcock
Deborah Hopkins
Ronald Kammerud*
Benoit Lebot
Keith Leedom
Jean-Michel Nataf
Ori Nour-Omid
Cindy Polansky
Joseph Rasson†
Edward Sowell‡
Charlotte Standish
Mashuri Warren
Kevin Whitley
Frederick Winkelmann*

*Group Leader.
†Engineering Division.
‡Participating guest.

BUILDING ENERGY SYSTEMS PROGRAM

INTRODUCTION

The main theme of the Program is the comprehensive simulation, analysis, monitoring, and evaluation of the energy performance of whole buildings, with the emphasis on nonresidential buildings. Many of the projects involve developing and applying the types of comprehensive computer models that enable integrated analyses of heating, cooling, and daylighting system performance. A further activity involves research on absorption heat pumps for solar cooling and gas-driven applications, and analysis of the performance and economics of solar cooling systems.

The Simulation Research Group has two major activities. The first is the maintenance and continued development of DOE-2, a public-domain computer program for detailed, hour-by-hour simulation of energy use in buildings. DOE-2 is in wide use in the U.S. and thirty other countries for design of energy-efficient buildings and for research studies of innovative building technologies. During FY 1987 work continued on adding new capabilities to DOE-2 to enhance its usefulness.

The second main activity of the Simulation Research Group is the development of the next generation simulation software for use in the 1990's and beyond. In collaboration with other groups in the U.S., France, China, and the U.K., a plan has been formulated to create an "Energy Kernel System" consisting of an extensive library of software modules and an executive program which will allow users to produce a wide variety of customized simulation programs. In FY 1987 LBL continued development of the Simulation Problem ANalysis Kernel (SPANK) as the first prototype of the Energy Kernel System.

The Building Systems Analysis Group continued investigation of the energy performance impacts of passive heating, cooling, and daylighting technologies in nonresidential buildings. A simplified correlation was developed to give estimates of the change in energy use resulting from roof-aperture daylighting systems in office buildings. This correlation is suitable for use in a daylighting design tool. Investigations of the ways in which thermal energy storage systems can beneficially impact building energy use continued. The studies conducted in FY 1987 focused on the integration of structural thermal energy storage with the mechanical cooling system.

Under the Solar Federal Buildings Program, a simplified technique for evaluating the long-term performance of daylit buildings based on short-term monitored data was completed, tested, and refined. This work was carried out in collaboration with researchers in the United Kingdom. The project was coordinated with researchers at SERI who are developing thermal performance evaluation methodologies.

Begun in FY 1985, the evaluation of the Institutional Conservation Program, conducted in collaboration with Argonne National Laboratory, was completed in FY 1987. This DOE program provides grants to schools, colleges, and hospitals to identify and implement energy conservation measures (ECMs). The evaluation project was designed to assess the success of the program in serving the needs of the institutional sector. In FY 1987 plans were implemented to collect data through mail surveys and phone interviews. Two additional studies were completed: one was directed at assessing the technical quality of the analysis on which ECM selection is based, and the other estimated the overall impact of the grants on energy use in the institutional buildings sector.

The Active Solar Cooling Project continued research on regenerative absorption heat pumps for high-efficiency solar cooling and heating systems. As part of a joint U.S./Israel effort, computer models are being developed to enable the detailed analysis and design of these and other new types of advanced absorption heat pumps. A parallel task entails simulation and comparative analysis of the expected performance and economics of future solar cooling systems (desiccant and absorption) and conventional vapor compression systems. These analyses keep careful track of all parasitic electrical power requirements as well as the thermal (solar or gas) driving sources.

LBL has also been participating in collaborative projects with other national laboratories involving the monitoring of commercial buildings: assistance to Oak Ridge National Laboratory in developing a protocol for the collection of energy use data for commercial buildings; and assistance to the Solar Energy Research Institute in identifying HVAC monitoring issues for testing the macrodynamic method of determining building thermal energy performance.

Simulation Research*

F.C. Winkelmann, B.E. Birdsall, W.F. Buhl, K.L. Ellington, A.E. Erdem, D.J. Hopkins, J.M. Nataf, O. Nour-Omid, and E.F. Sowell†

The Simulation Research Group (SRG) has the long-term objective of providing the architectural, engineering, and research communities with software tools to assist in the design of significantly more energy-efficient and cost-effective buildings. The ongoing research of the SRG has two main focuses: (1) the development and maintenance of the current-generation benchmark program (DOE-2), and (2) advanced simulation, the development of the next generation of building performance calculation tools (the Energy Kernel System).

As can be seen in Fig. 1, DOE-2 is composed of two major segments: the Building Description Language processor, which accepts descriptions of building components, and the LOADS, SYSTEMS, PLANT, and ECONOMICS processor, which uses building descriptions to simulate building energy performance. Details of the development and structure of the DOE-2 program are available in past annual reports and other published material.[1–18]

The main efforts in the advanced simulation area at this time are the creation of the Energy Kernel System (EKS) and the organization of the simulation development community to enhance collaboration. The EKS will have three main components: software primitives, including a component model library and simulation tools; a software executive to facilitate the construction of simulation programs by allowing general linkage of component models and support models; and a knowledge base that will contain the rules of simulation development and use so as to allow, at a future time, the construction of expert systems for building performance simulation. These three aspects of the EKS will provide the basic tools and information to allow the SRG and other groups to develop the simulation programs of the future. They will also provide a mechanism to facilitate exchange of research results and technology advances, and a basis for integrating performance simulation into computer aided design (CAD) and expert system software.

ACCOMPLISHMENTS DURING FY 1987

DOE-2

The SRG maintains a research effort that continues to develop enhanced versions of DOE-2. This ongoing research is divided into three parts: (1) the introduction of algorithm description techniques into the code; (2) the modeling of building envelope components and systems; and (3) the simulation of HVAC equipment and associated control systems. The next version of the program, DOE-2.1D, is scheduled for release to the public in 1988. Its major new features are described below.

User-Defined Functions

Direct user interface with the operation of DOE-2 is currently possible in the LOADS section of the program through the use of the FUNCTION command added during FY 1985. This feature allows direct modification, enhancement, or replacement of DOE-2 calculations without requiring any manipulation of the computer code. Users can write their own algorithms in a FORTRAN-like language and place this information in their building description, along with information indicating how and where these new algorithms are to be used. This is a major step forward in allowing designers and researchers to "fine tune" the simulation program to their specific needs. In the past this was not feasible without a major investment of time. This capability has now been added to the SYSTEMS portion of the program, making it possible for a user to add new HVAC simulation features, such as innovative control schemes.

Generalized Library

In the past it has only been possible to create DOE-2 libraries of materials, envelope constructions, and transfer functions. A new general library feature has been designed which will allow the users of DOE-2 to create custom libraries containing descriptions of any building component or system of components. This will allow definition of libraries containing data which might consist, for example, of standard operation schedules for different building types or of complex component descriptions. Even libraries of whole building descriptions can be created. This new library capability will greatly facilitate use of the program.

*This work was supported by the Assistant Secretary for Conservation and Renewable Energy, Office of Building and Community Systems, Building Systems Division of the U.S. Dept. of Energy, and by the Gas Research Institute and the GARD Division of the Chamberlain Manufacturing Corporation through the Dept. of Energy, under Contract No. DE-AC03-76SF00098.

†Visiting scientist. Permanent address: Department of Computer Science, California State University at Fullerton, Fullerton, California.

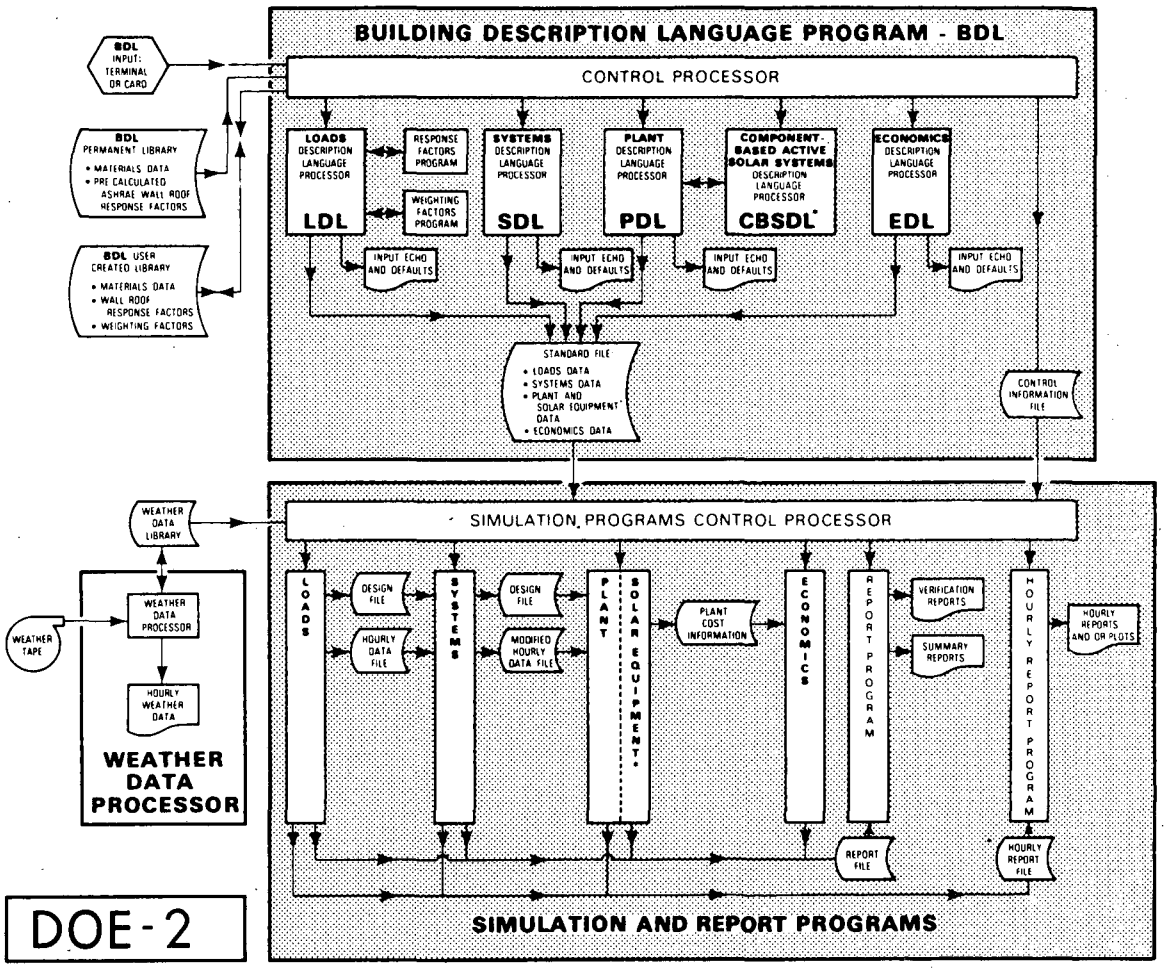

Figure 1. DOE-2 computer program configuration. (XBL 8010-2210B)

Fenestration

Because heat gain and loss through windows have a large impact on energy performance of most buildings, the DOE-2 window thermal calculations are being improved. This includes (1) an automatic calculation of the shading of diffuse solar radiation by neighboring buildings and by architectural elements such as overhangs (previously only the shading of direct solar radiation was calculated); (2) an improved calculation of infra-red radiation loss from the building envelope to the sky, taking into account atmospheric conditions (atmospheric moisture, cloud coverage) and blocking by architectural obstructions; and (3) an improved calculation of the amount of sky diffuse radiation falling on windows and walls.

Desiccant Cooling

In most climates, occupant comfort during the warmer months requires that room air be dehumidified. Several companies are developing desiccant cooling systems in which a hygroscopic material such as lithium bromide is used to remove moisture from the supply air stream. The desiccant is "regenerated" for further use by drying it with hot air from a gas-fired heater. Gas-fired desiccant systems of this type have the potential for being a replacement for, or a supplement to, conventional electric-driven cooling systems. However, almost nothing is known about the economics of desiccant systems for different climates, building types, and utility rate structures. For this reason, the SRG in FY 1987 (with

funding from the Gas Research Institute via the GARD Division of the Chamberlain Manufacturing Corporation) began development of DOE-2 models that can be used to simulate the performance of a variety of desiccant systems that are on the market now or are under development. Figure 2 shows schematically how a desiccant dehumidification module will be integrated into the air streams of a generic DOE-2 distribution system.

Histograms and Scatterplots

A new statistical analysis package developed by our collaborators in France at the University of Paris-South allows DOE-2 to plot "frequency of occurrence" distributions for any of the program's 200 hourly thermal and climatic variables. The distributions can be in the form of histograms (which show how often particular values of a variable occur) or scatterplots (which show frequency-of-occurrence correlations between two different variables). These plots will make it possible for users to see trends and inter-dependencies which would be difficult to determine from the conventional tabular reports in DOE-2. For example, a scatterplot of cooling coil power vs. outside air temperature (or enthalpy) could be used to study the performance of an economizer cycle.

Advanced Simulation

In recent years, researchers and designers have begun to investigate the use of very advanced technologies in buildings. The search for more efficient building designs has led to components, systems, and whole building structures which are extremely complex and therefore difficult to analyze. Existing programs like DOE-2 were initially conceived in an era when design questions were much simpler than they are today. Thus, there are fundamental limitations in the analysis capabilities of these programs. In particular, techniques have not been developed which allow accurate simulation of the interactions between building envelope components and HVAC equipment and their controls in a generalized, computationally efficient, and easily extendible manner. Analysis of complex designs and advanced technologies requires a substantial jump forward in the capabilities of the next generation of building performance simulation programs. To continue to meet DOE's long-term objective of providing up-to-date and reliable analysis tools, basic research has begun into new simulation techniques. This work will lead to the replacement of DOE-2 with a tool designed to meet the needs of architects and engineers in the 1990's. Several years of negotiations have led to the creation of an international collaborative effort

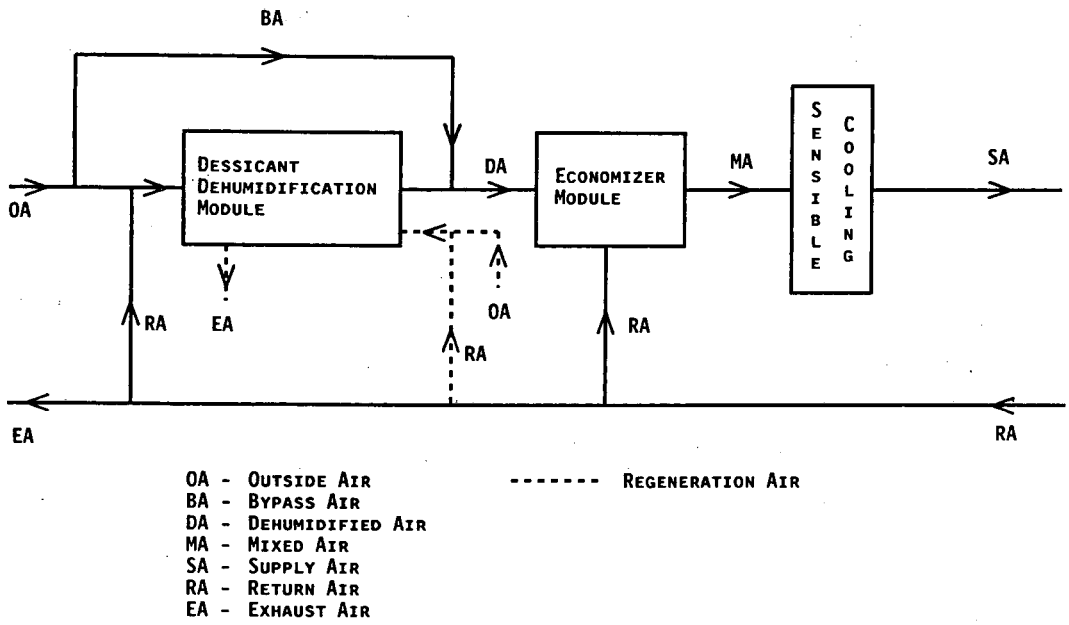

Figure 2. Integration of desiccant dehumidification module into the DOE-2 distribution system. (XBL 8712-5766)

among the U.S., U.K., France, and the People's Republic of China to produce the new software. This effort will provide not only a very significant advance in the building performance simulation field, but also a mechanism for the communication and exchange of results between a diverse community of designers and researchers.

The general goals and structure of the advanced simulation software have been determined.[19–22] The primary goal is to provide a software environment (called the **Energy Kernel System** or **EKS**) for developing new simulation programs which allow a high level of model construction flexibility and which facilitate state-of-the-art developments by making it easy to integrate new techniques with old. Other goals are to permit different modeling approaches, to encourage collaboration among model developers, and to take advantage of emerging software engineering in the area of multiprocessing.

A schematic of the EKS is shown in Fig. 3. The EKS will consist of (1) a library of software modules, or *objects*, representing different building components, physical processes, and mathematical solution techniques, and (2) an executive program, or *harness*, which allows users to link software objects to form customized energy models. The EKS user will first construct a *template* which defines a model as a collection of objects and a set of messages controlling the order of execution of the objects and the flow of information among them. The template is used by the harness to construct the final program in the form of source or executable code.

It is important to note that the EKS is designed for use by model *developers*, not by model users. It is intended to be an efficient way of building simulation models that can be used in a stand-alone fashion or that can be integrated into multipurpose environments such as computer-aided design (CAD) systems, expert systems, or energy management systems.

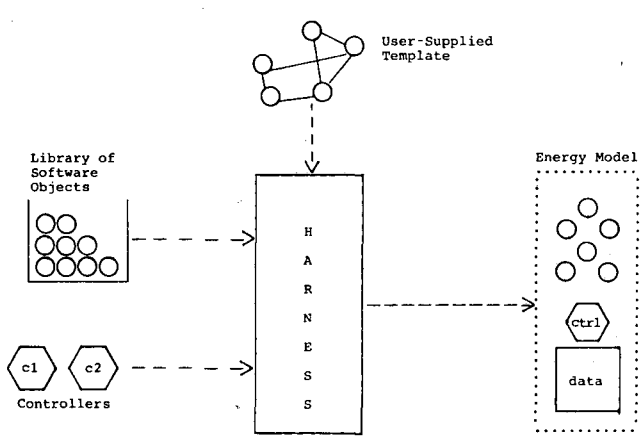

Figure 3. Proposed Energy Kernel System for creating building energy simulation models. (XBL 8712-5767)

SPANK: A Prototype Energy Kernel System

In FY 1986 the SRG began development of new software called the Simulation Problem ANalysis Kernel (SPANK) as a first prototype of the EKS.[23,24] SPANK views a simulation problem as a network — the nodes represent nonlinear equations, and the lines linking the nodes (called links or arcs) represent variables in the equations. The network representation of a simulation problem is completely equivalent to describing the problem as a set of simultaneous, nonlinear equations. The network representation has the advantage of allowing graph theory techniques to be used to reduce the size of the problem to be solved. The existing version of SPANK only allows algebraic equations, but the next version will handle first-order differential equations.

A simulation problem in SPANK consists of a set of coupled equations. Each equation or relation among variables is known as a "primitive object." Primitive objects may be combined into "macro objects," and primitive and macro objects can be combined into more complex macro objects. Thus modules (sets of equations) that represent complicated physical processes or entities can be built up from simple components. Once the necessary objects, either simple or complex, are defined, the problem description is completed by "linking" the objects together, i.e., by specifying which variables are common to which equations.

Once the simulation problem is defined, SPANK does the rest. The user does not have to choose a computation sequence (that is, write a procedural algorithm in FORTRAN or some other language) that solves the set of equations. SPANK creates the solution sequence in two steps. First, a particular relationship (equation) has to be selected for each variable and inverted to give a formula for that variable. Selecting a relationship to be used in solving for a particular variable is a classic matching problem from graph theory, and algorithms for performing this matching are well known.

Once the matching has been accomplished, the second step is to find a set of break variables, called a "cut set." These variables become the iteration variables in the solution sequence. That is, initial values are guessed, then used to solve for all the variables using the set of relationships, yielding new values for the cut set variables. Then a scheme such as Newton-Raphson iteration is used for choosing the next guess for the cut set.

Most simulation programs, when faced with solving a system of nonlinear equations, simply iterate on all the variables; i.e., the cut set includes all the variables in the problem. One of SPANK's major contributions is to use graph theory methods to reduce the cut size greatly, and thus to effectively reduce the problem size.

At this time the largest practical problem solved with SPANK is a simulation of a constant-volume reheat HVAC system. The model contains 23 equations and 23 variables. The cut set found by SPANK contains 1 variable, a 23 to 1 reduction in problem complexity. The model structure of the SPANK problem description (objects and macro objects) allows a model to be easily comprehended and altered. SPANK inherently allows simultaneity and nonlinearity. Lastly, the use of data flow concepts will allow SPANK to take optimal advantage of multiprocessor machines.

SPANK development continued in FY 1987. The following was accomplished:

(1) Several enhancements were made to improve the robustness of a SPANK simulation, including user-specified starting values to speed convergence and user-specified units on problem variables coupled with automatic program checking of consistency of units on object links.
(2) Object-oriented techniques were developed to allow SPANK to simulate time-dependent processes by integration of first-order differential equations.
(3) A graphical input processor was developed which simplifies input preparation by allowing users to link objects on a VDT screen and display the final network before sending it to the SPANK equation solver.

International Association

A major element of the proposal to develop the EKS was the formation of a new professional association to guide research and development in the building performance simulation field. This organization, called the *International Building Performance Simulation Association (IBPSA)*, officially came into being in January 1987, culminating over three years of meetings and discussions among building professionals. IBPSA aims to promote the science of building performance simulation as a means of improving the design, construction, operation, and maintenance of all types of buildings. Organizers include members of the building industry who use building simulation software, researchers who develop this software, and members of governmental agencies concerned with building performance.

The formation of IBPSA is directly related to the need for new directions in building simulation software foreseen by workers in the field as early as 1983. At a DOE-sponsored conference in Leesburg, Virginia, in the Fall of 1983, industrial users of programs such as DOE-2, BLAST, and proprietary codes met with program developers and researchers to evaluate the status quo and see what new developments were on the horizon or needed. This was followed by two years of discussion and proposals for new sponsored research to address the needs identified at Leesburg. A major milestone along the way was the DOE/ASHRAE–sponsored Building Energy Simulation Conference in Seattle, held in August 1985. Subsequently, a composite proposal for the Energy Kernel System was formulated by an international group working at LBL. That proposal called for a collaborative effort with ongoing guidance provided by an international association. The first meeting of this association, which later became IBPSA, was held in San Francisco in January 1986. After two more meetings and much work in between, IBPSA was incorporated as a non-profit organization in Canada on January 26, 1987. Throughout this process, there has been a growing number of enthusiastic participants, anxious to make IBPSA into a major force in setting future directions in building simulation research and software development.

At its most recent meeting held in Nashville in June 1987, IBPSA embarked on an ambitious program of activities, including plans for a major conference in Vancouver in June 1989. This conference will bring together practitioners and researchers concerned with building energy analysis programs and other aspects of building simulation. In the meantime, there will be a quarterly newsletter and an annual bibliography of related literature. Other projects set in motion include the development of a long-range research priorities list and the formal elections of a Board of Directors and Officers.

PLANNED ACTIVITIES FOR FY 1988

DOE-2

The DOE-2 program will continue to be maintained and supported and its documentation enhanced. The quarterly *DOE-2 User News* will continue to be published. An improved version of the program, DOE-2.1D, will be completed and released to the public.

Advanced Simulation

The SPANK program will be released for outside review after in-house testing of the graphics-based input processor and the dynamic simulation features. Exercises will be carried out to compare SPANK and ZOOM, an advanced simulation program being developed in France. The U.S. and U.K. will begin development of detailed specifications for the Energy Kernel System. Work will continue in the People's Republic of China on new convection calculation techniques for incorporation into the EKS. Work will be completed on three EKS-related projects performed under contract to LBL by other groups in the U.S.: macrodynamic simulation (SERI), a generalized finite element approach for building energy simulation (NBS), and advanced transfer function techniques (University of Wisconsin).

REFERENCES

1. LBL Simulation Research Group (1984), "DOE-2 Supplement, Version 2.1C," LBL-8706 Rev. 4. Suppl.
2. LBL Simulation Research Group (1984), "DOE-2 BDL Summary, Version 2.1C," LBL-8688 Rev. 4.
3. LBL Simulation Research Group (1981), "DOE-2 Users Guide, Version 2.1A," LBL-8688 Rev. 4.
4. LBL Simulation Research Group (1984), "DOE-2 Sample Run Book, Version 2.1C," LBL-8678 Rev. 2.
5. LBL Simulation Research Group and Group Q-11 of Los Alamos National Laboratory (1984), "DOE-2 Reference Manual, Version 2.1C," LBL-8706 Rev. 4.
6. Diamond, S.C. and Hunn, B.D. (1981), "DOE-2 Verification Project: Phase 1, Interim Report," Los Alamos National Laboratory Publication LA-8295-MS; Diamond, S.C., Capiello, C.C., and Hunn, B.D. (1986), "DOE-2 Verification Project: Phase 1, Final Report," Los Alamos National Laboratory Publication LA-10649-MS.
7. Schnurr, N.M. et al. (1979), "Applications of DOE-2 to Direct-Gain Passive Solar Systems: Implementation of a Weighting Factor Calculative Technique," Los Alamos National Laboratory Publication LA-UR-79-2227.
8. Roschke, M.A., Hunn, B.D., and Diamond, S.C. (1978), "A Component Based Simulator for Solar Systems," Los Alamos National Laboratory Publication LA-UR-78-1494.
9. Hirsch, J.J. (1982), "Simulation of HVAC Equipment in the DOE-2 Program," LBL-14026.
10. Curtis, R.B. (1981), "The Theoretical Basis of the DOE-2 Building Energy-Use Analysis Program," LBL-12300.
11. Simulation Research Group (1985), "Overview of the DOE-2 Building Energy Analysis Computer Program," LBL-19735.
12. LBL Simulation Research Group and LANL Group Q-11 (1982), "DOE-2 Engineers Manual, Version 2.1A," LBL-11353 and Los Alamos National Laboratory Publication LA-8520-M.
13. Winkelmann, F.C. and Selkowitz, S. (1986), "Daylighting Simulation in the DOE-2 Building Energy Analysis Program," *Energy and Buildings 8,* 271.
14. Eto, J.H. (1984), "Commercial Building Cogeneration Opportunities," LBL-18176.
15. Bazjanac, V. and Winkelmann, F.C. (1988), "Daylighting Design for the Pacific Museum of Flight: Energy Impacts," LBL-23617.
16. Birdsall, B. (1985), "A Comparison of DOE-2.1C Prediction with Thermal Mass Test Cell Measurements," LBL-18981.
17. Buhl, W.F. et al. (1985), "New Features of the DOE-2.1C Energy Analysis Program," LBL-19870.
18. Winkelmann, F.C. and Selkowitz, S. (1985), "Daylighting Simulation in DOE-2: Theory, Validation, and Applications," LBL-19829.
19. Buhl, W.F. et al. (1985), "A Proposal to Develop a Kernel System for the Next Generation of Building Energy Simulation Software," Lawrence Berkeley Laboratory.
20. Hirsch, J. J. (1985), "Plan for the Development of the Next Generation Building Energy Analysis Computer Software," LBL-19830.
21. Clarke, J.A. et al. (1986), "Planned Developments in Building Energy Simulation," in *Proceedings of the 5th CIB Symposium on Energy Conservation in the Built Environment,* Bath, England.
22. Winkelmann, F.C. (1987), "Advances in Building Energy Simulation in North America," *Energy and Buildings 11,* 161.
23. Anderson, J.L. (1986), "Network Definition and Solution of Simulation Problem," LBL-21522.
24. Sowell, E.F. et al. (1986), "Prototype Object-Based System for HVAC Simulation," in *Proceedings of the Second Systems Simulation Conference,* Liege, Belgium; LBL-22106.

Building Systems Analysis*

R.C. Kammerud, B. Andersson, B. Birdsall, W.L. Carroll, D. Dumortier, B. Erwine, B. Hatfield, R.J. Hitchcock, B. Lebot, J. Noring, A. Seager, and E. Vine

The Building Systems Analysis Group has been involved in two major types of work during the past year. The first, our more traditional area of work, is nonresidential buildings research. The projects falling under this heading are the development of a methodology for use by energy consultants and engineers to evaluate the energy savings of daylighting applications; the development of a simple set of correlation equations for use in daylighting design tools; and identification of energy-conserving techniques applicable to each of a variety of military building types. The other area of work, newer to this group, is program evaluation. We completed a two-year project to assess DOE's Institutional Conservation Program for its success in serving the needs of the institutional buildings sector.

ACCOMPLISHMENTS DURING FY 1987

Nonresidential Buildings Research

Daylighting Performance Evaluation Methodology Development

Daylighting is an increasingly popular form of solar utilization for energy conservation in buildings, not only because of its economic and energy benefits, but also because of its potential for a positive contribution to the appreciation and enjoyment of buildings. In any passive building, it is important to evaluate the success of the application in terms of energy savings, economic impact, architectural effects, and occupant response. In this methodology development, which is part of the DOE Solar Federal Buildings Program, investigations have been limited to daylighting's impact on energy savings. A methodology for determining energy savings due to solar heating and cooling technologies is being developed by the Solar Energy Research Institute in parallel with this effort.

The ability to make reliable predictions of daylighting performance is dependent upon accurate characterization of two key relationships: (1) interior illumination as a function of the solar resource and the daylighting configuration; and (2) electric lighting energy use as a function of the interior illumination and control of the lights. In FY 1986, during the first phase of this project, a technique based on these two key relationships was developed for evaluating daylighting performance in comparison with a non-daylit building. In short, the procedure uses (1) detailed simulation of the daylighting system, and (2) specific short-term measurements to adjust the simulation, to provide a realistic estimate of the long-term energy savings. The methodology provides a straightforward, reasonably simple, documented means of evaluating daylighting performance for the building owner, designer, or researcher.

FY 1987 saw completion of the second phase, in which the method was demonstrated in a full-scale application. In collaboration with the United Kingdom's Energy Performance Assessment Program, the method was tested on an office building near Birmingham, England. Instrumentation was installed and data collected in the U.K. by a British team with LBL's technical support. The data analysis and evaluation were then performed at LBL with U.K. assistance. Three types of measurements were made: exterior solar radiation, interior illumination, and electric lighting use. These data were used to determine the following under actual operating conditions: (1) interior illumination response to solar radiation, and (2) lighting control response to interior illumination. With this information, both the simulation model that results in illumination levels under varied sky conditions and the model that results in electric lighting use predictions were adjusted to represent properly the *actual* conditions and operation of the building, as shown schematically in Fig. 1. The results showed that the method effectively estimates the long-term electric lighting energy use.

The public domain program SUPERLITE was selected as the basic illumination model. An integrated set of microcomputer software (IBM/PC) was developed for easier and more consistent application of the method. It was refined during the full-scale testing, and it is available for those who wish to use the method.

* This research was supported by the Assistant Secretary for Conservation and Renewable Energy, Institutional Conservation Program Division and the Solar Buildings Technology Division of the U.S. Department of Energy; and by the Electric Power Research Institute and the United States Army Construction Engineering Research Laboratory through the Department of Energy, under Contract No. DE-AC03-76SF00098.

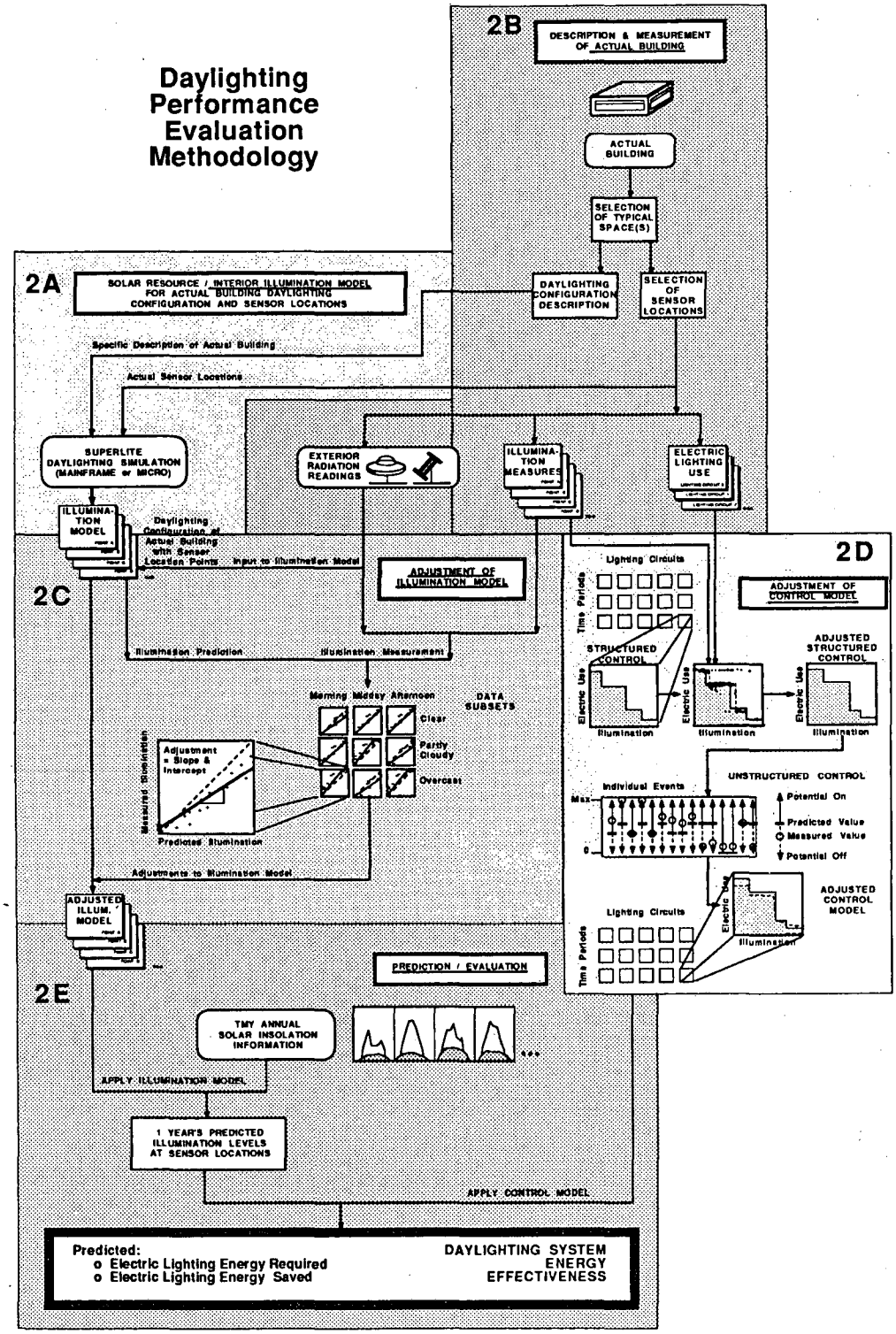

Figure 1. Flow chart of full daylighting evaluation methodology. (XBL 881-56)

Correlation Equations for Daylighting Design Tools

The overall impact of roof-aperture daylighting systems on the energy consumption, and consequently on the utility costs, in office buildings is the result of a complex and detailed set of interactions. An accurate estimate of this effect can be determined only by computer simulations using a detailed hourly energy analysis program that can correctly account for all the interactions. While these simulations can be performed with existing analysis programs, they are typically slow and difficult. However, since design tool accuracy is less important than speed, simplicity, and ease of use, a simplified representation of building energy consumption expressed as a function of the most important building design, operational, and climate factors should be adequate for a design tool. This project is a first effort at developing such simplified correlations for design tool applications.

The general correlation approach utilized a database of office building energy and cost performance to develop simplified expressions for the energy use as a function of selected design, operation, and climate parameters. The database was developed from a series of detailed hourly energy analysis simulations of a prototypical design indicative of current practice. It included parametric variations of a range of roof-aperture daylighting system designs of different sizes and orientations, lighting levels, and climate.

Correlations were derived separately for three components of energy use: (1) lighting electricity, (2) cooling electricity, and (3) heating fuel. Each of the separate correlations was developed by examining the *change* from the annual consumption of a baseline prototype that had no daylighting system, to a modified design which did. This change was expressed as a fraction of the baseline annual consumption of the component.

The combined effect of the individual relative change ratios $\Delta C/C_0$ for cooling electricity, $\Delta L/L_0$ for lighting electricity, and $\Delta H/H_0$ for heating fuel on overall building utility cost performance is:

$$\frac{\Delta \$}{\$_0} = \left(\frac{1}{1+\beta}\right)\left[\left(\frac{1}{1+\alpha}\right)\frac{\Delta C}{C_0} + \left(\frac{\alpha}{1+\alpha}\right)\frac{\Delta L}{L_0}\right] + \left(\frac{\beta}{1+\beta}\right)\frac{\Delta H}{H_0}$$

where

$\$$ represents the total annual building utility costs for electricity and fossil fuel, $\$ = P_E \cdot (L+C) + P_H \cdot H$, for electricity and fuel prices, P_E and P_H, respectively;

C is the annual cooling electricity consumption, L is the annual lighting electricity consumption, and H is the annual fossil fuel consumption for heating;

$\alpha = L_0/C_0$ is the ratio of lighting to cooling electricity consumption for the base case (non-daylit) building; and

$\beta = P_H H_0/P_E(L_0+C_0) = (P_H/P_E) \cdot H_0/(L_0+C_0)$ is the ratio of total annual heating *cost* (price times consumption) to the annual electricity *cost* for the base case (non-daylit) building.

The form of this equation is independent of the actual correlations developed for each of the separate components. The ratios α and β involve only fundamental end-use energy distributions in the base case building and from our database and are dependent on climate. Values for these ratios can be easily determined from information about the specific design of the building and from utility costs. Together with correlation results for the three energy use components, the overall impact of a roof-aperture daylighting system can be easily determined.

Corps of Engineers' Efficient Buildings

Through increasingly stringent energy use standards, the military has significantly reduced energy consumption in the past ten years. Standard building designs are now being developed for a variety of building types. These standard buildings will be used as "templates" for the contracted architects and engineers who design the bulk of military buildings. To ensure that buildings developed from the standard designs can achieve a high level of energy efficiency, the Corps asked LBL to identify the energy conserving techniques that are most applicable to each building type and to develop integrated solutions that can be incorporated early in the design.

Two standard building prototype designs had been developed sufficiently to be analyzed for energy use: Battalion Headquarters and Barracks. A climate analysis was performed to determine the most representative sites for analysis of military building construction. Detailed computer simulation building descriptions were prepared for both buildings to be analyzed with the building energy analysis program BLAST. Basic energy use patterns were characterized for both buildings by simulation of the buildings in different climates. A series of parametric studies was performed, investigating one parameter at a time, to identify the key elements in the energy use patterns.

The work with the Battalion Headquarters building was taken a step further. Using the key parameters already identified, more detailed studies were done to determine the desired ranges of those parameters and to gain a better understanding of their effects and interactions. From these studies, preliminary design guidelines were developed.

Institutional Conservation Program Evaluation Project

The Institutional Conservation Program (ICP) was enacted by Congress in 1978 to provide matching grants to the institutional sector, including nonprofit hospitals, elementary and secondary schools, and colleges and universities, for energy conservation actions. The grants are used to fund energy audits, technical analyses, and installation of energy conservation measures (ECMs).

In 1984 Congress mandated an evaluation of ICP. LBL, in collaboration with Argonne National Laboratory, was chosen to carry out this project. The overall goal of the evaluation project is to identify the most successful measures—both equipment and activities—available to the institutional buildings sector. The evaluation project has two closely related, underlying thrusts, one retrospective and the other prospective. The thrust of the retrospective work is towards examination of (1) energy use data and (2) nonfederal expenditures on ECMs that have resulted from increased awareness of energy conservation potentials engendered by ICP. Through this evaluation we also hope to understand what makes a conservation program successful and how to disseminate this information. Such objectives are prospective and serve as a guide for future conservation efforts.

During the past year, LBL concentrated on the following areas: (1) evaluation of technical audit calculations; (2) analysis of survey results from the higher education subsector; (3) estimates of aggregate energy savings; and (4) analysis of state energy data.

Examination of Technical Audit Calculations

To be eligible for an ECM grant, an institution must have had a technical analysis (TA) of its building(s) performed. This comprehensive analysis results in a written report that describes the building and its energy systems. The report's main purposes are to recommend ECMs appropriate to that building and to serve as a long-term guide for energy management in the institution. A sample of 120 TA reports was examined to determine (1) which calculation techniques are being used to identify ECMs appropriate to the building and (2) whether the energy savings estimates resulting from these calculations are technically sound.[1]

The basic approach was to collect information from the TA report: engineering data about the building and its energy systems, baseline energy use, recommended ECMs, estimated savings with implementation of the measures, and the calculation method by which the savings were determined. This information was used as input to a computer simulation program. The simulations were used to reanalyze the building and the impact of ECMs recommended in the TA report. This study yielded the following observations:

- TA calculations are responsible for only a fraction of the disagreement between actual and predicted savings observed in existing data. Likely sources for the remainder of the disagreement are in design, installation, and operation of the ECMs.
- A wide range of calculation techniques appears in the sample in this study, with a predominance (76%) of simpler, component-based calculations, sometimes modified to account for at least some of the more complex energy issues common in institutional buildings. This observation does not imply that it is common for inappropriate ECM recommendations to be made because of inadequate calculations. Rather, it means that analysts often are limited in (1) the range of ECM options that they can examine, (2) the ability to disaggregate energy use, e.g., to break down electricity use into lighting, cooling, and office equipment, and (3) the ability to account fully for what can be important interactions among ECMs and between the ECMs and the other energy systems in the building.
- In comparison with the reanalyses performed at LBL, the TA reports show a strong tendency to overpredict energy savings, thereby leading to overly optimistic estimates of cost-effectiveness. Figure 2, for example, shows TA-estimated savings versus savings estimated by our reanalysis for envelope measures. In addition, a relatively strong relationship holds between the extent of the overprediction and the type of energy conservation measure under consideration.
- In general, the TA reports do not provide sufficient detail to allow unambiguous determination of the detailed nature of the calculations used and of the specific ECM recommended.
- There is evidence of a lack of sense of scale for energy consumption among end uses in buildings; e.g., what is a typical range of percent of electricity use for lighting in an elementary school, given the

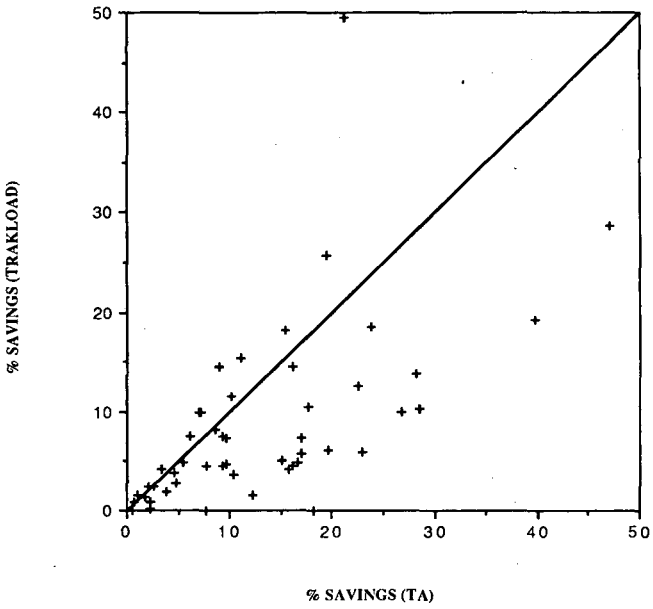

ENVELOPE MEASURES

Figure 2. Estimated savings for envelope retrofits: TA vs. TrakLoad. (XBL 876-2989)

other uses of electricity in that school and the other nonelectric energy uses?

We concluded that required use of a particular calculation method is not in order. The appropriateness and accuracy of a given calculation in a given situation depend on how well the calculation represents that measure and how well it accounts for interactions between the ECMs and the other energy systems in the building. It would be more effective to identify conditions and measures under which each type of calculation (1) is adequate in principle, (2) can be adequate if appropriate refinements have been incorporated, and (3) generally is inadequate. To deal with invalid assumptions in TA calculations, we suggest screening reports based on generic energy use information for various types of buildings and also based on detailed lists of invalid assumptions commonly observed.

Survey of Energy Use in Colleges and Universities

The many issues that this evaluation encompasses have required the collection and analysis of new data. Extensive questionnaires were developed for each of the three types of institutions eligible for ICP grants. These questionnaires were sent to institutions that have not participated in ICP as well as to those that have. Information solicited addresses institutional, organizational, and technical issues. LBL analyzed the responses from the higher education subsector.[2] Key findings from the survey were the following:

- Though more than 70% of the survey respondents reported increases in their level of energy conservation effort since 1980, less than 45% reported decreases in energy use, and approximately the same number reported increases. The most commonly reported reasons for changes in energy consumption were (1) changes in building operation, and (2) increases in floor area.
- By far, the most common source of funds used by institutions to purchase energy-saving capital equipment was internal operating and capital budgets, especially by public institutions and ICP participants. Grants ranked second, with substantially fewer institutions using other financing mechanisms. The financing mechanisms that the institutions plan to use to support future energy conservation efforts were ranked in the same order.
- Over 35% of the respondents participated in energy conservation programs sponsored by utilities, and private institutions were more likely to have taken advantage of these programs than their public counterparts. Participation was highest in the West and Southwest.
- The primary motivations for taking energy conservation actions were reported to be the current high cost of energy, the expectation of further cost increases, and utility demand charges or rate structures. The next three most important reasons were related to the institution and its reaction to energy cost factors: cost-containment programs, availability of outside funds, and the support of administration and staff.
- The physical plant director and chief financial officer were reported to be primarily responsible for energy conservation activities in colleges and universities. The most commonly reported information sources for setting overall objectives were the experience of other institutions and professional associations. A wide range of information sources was used in selecting specific measures. However, no information source was dominant.
- In the period between 1973 and 1979, the most common retrofit was the installation of time clock controls, followed closely by caulking and weatherstripping; lighting conversions; heating, ventilation, and air-conditioning (HVAC) system adjustments; insulation; and lighting modifications. Between 1980 and 1986, there was a significantly larger number of measures installed, but they were

very similar in relative frequency to the previous period. In the future (1987–1990), the level of energy conservation activity is expected to remain high; emphasis appears to be changing slightly, with substantial increases in the areas of energy management control systems and lighting retrofits. Continuing a trend developed in the previous two periods, four-year colleges and universities are planning to implement more energy conservation measures than two-year colleges and universities.

- The most effective energy-saving measures were reported to be controls for either the HVAC system or for the lighting system. Other ECMs ranking high with respect to energy savings were envelope measures (e.g., insulation and weatherstripping), lighting measures (e.g., delamping and conversion to fluorescent lights), and heating measures (e.g., boiler replacement). That these measures were most effective is based, in most cases, on the respondents' observations and not on analysis of monitored data.
- Energy conservation efforts have not been trouble-free. Over 50% of the respondents indicated that they have experienced technical problems with the ECMs. Institutions also quite commonly experienced problems associated with occupant behavior (e.g., opening windows in the winter) and with occupant comfort.

Aggregate Energy Savings Estimate

Another facet of the ICP evaluation was an effort to estimate the aggregate energy savings attributable to ICP and the remaining opportunities for saving energy in institutional buildings.[3] The calculation of aggregate energy savings was divided into two parts: the first considers the impact on energy use of ECMs installed with ICP support ("direct savings"). The second considers how ICP may have influenced institutions that have installed ECMs without ICP support. The energy savings in this case are partially attributable to ICP and are referred to as "indirect savings."

The basic approach to determining aggregate direct energy savings is to estimate the savings for each building in each ECM grant, and to accumulate these estimates over all grants. For each building, the estimated energy savings is the value calculated during the original engineering analysis of the building that led to identification of recommended ECMs; this value is entered into the GTS database. In our calculation, this value has been corrected by a factor determined during reanalysis of a sample of 100 of the original technical analyses.[1] Table 1 summarizes the direct aggregate savings results.

The current annual energy savings due to energy conservation measures installed with ICP support is about 3% of the total annual energy use in the institutional sector. The average savings achieved by ICP participants are approximately 12% for educational facilities and 8% for hospitals.

Comparison of the total investment, $1.3 billion, to the total savings to date, $1.9 billion, indicates clearly the cost-effectiveness of the investment. Calculations of aggregate indirect energy savings have been made based on subsector-wide data that allows estimation of (1) the level of ICP-independent retrofit activity and (2) the fraction of the energy savings from these non-ICP retrofits that may be attributable to ICP. By combining the indirect and direct savings, total ICP impacts are determined. Remaining opportunities for energy savings in the institutional building sector are estimated for three scenarios regarding potential performance improvements in

Table 1. Direct energy savings estimates (primary energy, 1987 dollars).

	Schools	Colleges	Hospitals	All[a]
Number of ECMs installed	45,483	14,807	9,645	69,935
Total ECM installation costs (million $)	522	349	524	1,386
Total energy savings (trillion Btu) (ICP start through 1987)	91	88	137	317
1987 annual energy savings (trillion Btu/yr)	19	18	28	64
Total cost savings (million $)	670	508	745	1,924
1987 annual cost savings (million $/yr)	132	102	153	387

[a]Numbers may not total correctly due to rounding

existing buildings. The performance levels are: (1) the average savings achieved by ICP participants to date in each subsector (minimum potential); (2) those reflected in good design practice for new buildings currently being built in each subsector (maximum economically feasible potential); and (3) a benchmark reference that ignores economic feasibility, for savings believed to represent the technical limit in performance for buildings in each subsector. A summary of the indirect savings and remaining opportunities is shown in Table 2; for completeness, direct savings are also shown.

Key conclusions from indirect savings and remaining opportunities calculations are:

- Indirect savings are substantial, ranging from about 40% to 80% (depending on subsector) of the direct savings; this implies that the ICP program has had substantial influence on non-ICP retrofit activities in all institutional subsectors.
- A broad range can be defined for the remaining opportunities for energy savings in each of the subsectors, depending on the assumptions as to the attainable performance improvements. There is substantial variation across the subsectors in the magnitude of the remaining potential relative to either the ICP or total energy conservation impacts to date.
- When the cumulative impact of all institutional sector retrofit activities is considered, the pool of remaining opportunities for continued retrofitting of the existing stock at past levels of cost-effectiveness or payback are declining. Increasingly, the energy consumption characteristics of the institutional subsectors are being determined by previously retrofitted and newly constructed buildings. Further retrofits, to be competitive, must be at least as attractive as the economic returns from other investments available to the institution.

Energy Use in Minnesota Schools

An analysis was made of energy consumption data for schools in Minnesota during the 1970s and 1980s.[4,5] We estimated energy savings for individual schools and for the entire group of Minnesota schools participating in ICP. The actual savings, based on an analysis of pre-retrofit and post-retrofit energy usage, was about 5%. We conclude that existing energy conservation efforts are producing incremental improvements in overall energy performance in Minnesota schools, amounting to substantial savings in the aggregate. Moreover, actual energy savings may be substantially larger than the 5% found in our analysis: a significant fraction of the savings may be offset by other physical or functional changes that often tend to increase energy use in the institution. Other conclusions reached by this study are:

- Annual variation in energy use for a particular institution can be quite large and may mask the energy savings of ECMs. Detailed information on the causes of variation in energy use is necessary for isolating the energy effects of ECMs.
- As shown in Fig. 3, there was no significant difference in the energy use intensities (kBtu/ft^2), or EUIs, of ICP participants and nonparticipants in Minnesota. Accordingly, the unpenetrated stock of buildings represents a large audience for continued energy conservation efforts.

Table 2. Indirect savings and remaining opportunities (trillion Btu/yr).

	Schools	Colleges	Hospitals
Impact of past ICP activities			
Direct savings	19	18	28
Indirect savings	8	14	15
Total ICP impacts	27	32	43
Total impacts not attributable to ICP	24	33	7
Total energy conservation impacts to date	51	65	50
Remaining Opportunities			
Minimum	67	47	23
Maximum Feasible	197	83	92
Technical Limit	360	306	253

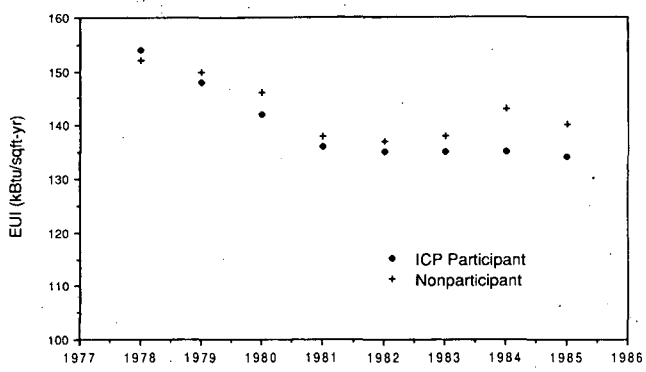

Figure 3. Area-weighted mean EUI for Minnesota schools. (XBL 881-55)

PLANNED ACTIVITIES FOR FY 1988

Nonresidential Buildings Research

Further testing of the daylighting evaluation method will be performed. The method will be refined and enhanced by (1) testing with atria and other daylighting configurations, and (2) extending the method to qualitative evaluation of the daylighting system in addition to estimation of energy use.

To reach a stage in the Corps of Engineers project in which useful, distilled information can be given directly to the designers, several steps will be taken with the Battalion Headquarters. First, comfort effects will be evaluated, especially with respect to thermal mass and floor insulation. Second, innovative, integrated, energy-conserving solutions will be developed and tailored for each of the ten climates. Finally, we will work with Corps personnel to develop information for release to the designers and the Corps design reviewers.

A new project in FY 1988 is development of a methodology for cool storage sizing. In the first phase, simulations will be carried out to examine hourly and daily cooling capacity requirements for prototypical office and retail buildings in Dallas and Chicago. Analyses will be conducted to provide a better understanding of the cooling coil load profile. In the second phase, we will characterize peak conditions and identify associated cooling requirements for a broader range of building types. Parametric analyses will be carried out to examine the relationship of peak cooling requirements and building design variables. The components of the second phase will be synthesized to produce the pilot sizing methodology. We also plan to develop and document a mathematical model for storage sizing.

Institutional Conservation Program Evaluation Project

Although plans have not been finalized, several areas of research are under consideration. One major area relates to recommendations resulting from the examination of technical audit calculations. Possible projects include (1) examining reported ECM problems in depth, (2) documenting energy use scales for institutional buildings, (3) developing calculation screening tools for use by TA analysts and state energy offices, and (4) developing ECM "menus" for small schools. Another major area is activities based on analysis and interpretation of the aggregate data for the institutional sector. Candidate activities are (1) forecasting and evaluating impacts of energy conservation programs and (2) determining economically optimal penetration strategies.

REFERENCES

1. Birdsall, B., Lebot. B., Kammerud, R., and Hatfield, B. (1987), "An Examination of Technical Audit Calculations for Schools and Hospitals," LBL-23527.
2. Vine, E., Kammerud, R., Carroll, W.L., Hatfield, B., and Barnes, B.K. (1987), "Nationwide Survey of Energy Conservation in Colleges and Universities: Institutional, Organizational, and Technical Characteristics," LBL-23605.
3. Carroll, W.L., Kammerud, R., Birdsall, B., Lebot, B., Hatfield, B., and Vine, E. (1987), "An Estimate of Aggregate Energy Savings Due to the ICP Program," LBL-24053.
4. The database for this study was provided by the Minnesota Department of Public Services, Energy Division, St. Paul, Minnesota.
5. Vine, E., Hatfield, B., Lebot, B., Kammerud, R., and Carroll, W.L. (1987), "Energy Use in Minnesota Schools: Aggregate Performance and Perspectives on Energy Savings," LBL-24052 Draft.

Active Solar Cooling*

M. Wahlig, J. Rasson, M. Warren, and I. Parmaksizoglu

The purpose of this project is to make major contributions to the technology base necessary for solar energy to become a viable option for the cooling of buildings. This project has two major tasks: (1) research on improved absorption cycles for high-efficiency active solar cooling and heating systems and (2) systems analysis of active solar cooling and heating systems to establish operating requirements, research needs, and thermal performance of current and advanced space conditioning systems. In addition, LBL has been assisting the DOE Solar Buildings Program in planning and coordination activities for the solar cooling part of the research program.

The objective of the absorption cycle research is to achieve a significantly higher conversion efficiency than is possible using other approaches to solar cooling and heating of buildings. In recent years, research has concentrated on *regenerative* absorption cycles, a technological approach that attains high efficiency by more closely approximating (than do other cycles) an ideal Carnot cycle. Early analytical calculations predicted that a double-effect regenerative (2R) absorption-cycle chiller would operate at about 55%, and that a single-effect regenerative (1R) absorption chiller would operate at about 70 to 75%, of the ideal Carnot coefficient of performance (COP). The 2R chiller was built and tested, and it attained the predicted performance, as reported in last year's Annual Report. In parallel, work was begun on developing an analytical capability to model in detail the expected performance of advanced absorption cycles.

The objectives of the systems analysis activities are: (1) to perform systems simulation and analysis of active solar absorption and desiccant cooling/heating systems to establish the operating requirements and thermal performance of current and advanced space conditioning systems; (2) to develop methods to analyze different cooling systems in a common comparative framework; and (3) to evaluate by computer simulation the impact of system controls and control strategies on annual energy savings of advanced solar-driven heating, ventilating, and air conditioning systems.

*This work was supported by the Assistant Secretary for Conservation and Renewable Energy, Office of Solar Heat Technologies, Solar Buildings Technology Division of the U.S. Department of Energy under Contract No. DE-AC03-76SF00098.

ACCOMPLISHMENTS DURING FY 1987

Absorption Cycle Research

As part of a joint U.S./Israel project on solar cooling, LBL and the Technion (in Haifa, Israel) are developing techniques to model and simulate the performance of high efficiency absorption chillers/heat pumps, enabling prediction of the performance of solar cooling and heating systems using these chillers/heat pumps. LBL is adapting the public-domain process flowsheet ASPEN (Advanced System for Process Engineering) for this purpose. By the end of FY 1986, the detailed modeling of the 2R regenerative absorption heat pump had been accomplished; this represented the first successful application of the ASPEN program (or any program) to model in detail a fairly complex absorption heat pump.

Early in FY 1987, a sensitivity analysis was conducted of the 2R chiller performance as a function of condenser/absorber temperature, generator temperature, and evaporator temperature. The results were accurate and reproducible, indicating that the ASPEN program and the ammonia-water thermodynamic model are capable of converging to a unique solution for all operating conditions.

As a cross check, ASPEN and the model under development at the Technion were both used to simulate a single-effect ammonia-water absorption chiller. The two models gave essentially identical results. ASPEN has an advantage in being a more robust solution method: it allows relaxed tolerances for initial guesses to ensure program convergence.

Attention was then turned to adapting ASPEN to the more difficult task of modeling the 1R regenerative absorption cycle. The 1R cycle is more elegant yet more complex than the 2R cycle; it comes closer to matching an ideal Carnot cycle, with less hardware than the 2R cycle, but at the expense of additional flow pathways. Therefore, its modeling is a greater challenge. Modeling of the regenerator component, which is a multistream heat exchanger, was a major effort, as models for this type of component do not exist in ASPEN. The component was modeled as a set of parallel vapor-liquid rectification columns, with external heat exchange. One geometry option for this component model was tested successfully by the end of the fiscal year, and work on this method of modeling the 1R cycle will continue in FY 1988.

In parallel, it was decided to try to develop a simultaneous-equation solution technique for the 1R cycle using the algebraic equation solver HYBRID.

The sensitivity of the refrigerant enthalpy to the ammonia concentration in the evaporator often leads to convergence failure for simultaneous solution methods. This difficulty was overcome by separating the cycle convergence criteria from the equation-solver convergence criteria. This technique was then used to solve sets of linear algebraic equations that simulate 6-, 5-, 4-, and 3-pressure-step 1R cycles, generating performance maps for a range of operating conditions. Although this HYBRID solution method is very useful for "design case" analysis, off-design analysis requires the more rigorous solution approach only possible at this time using an iterative solution technique like ASPEN.

Systems Analysis

As part of the Active Solar Cooling Program, LBL has undertaken a comparative analysis of the technical performance of future ventilation mode desiccant systems with proposed advanced absorption and with conventional vapor compression systems.[1,2] A common framework has been developed for direct comparison of very different cooling technologies building on previous work.[3] Psychrometric analysis is used to determine the performance of the supply air cooling system. Energy for distribution of air is explicitly determined from component and duct pressure drops assuming a 50% fan efficiency. The parasitic energy requirements of other air side components are also calculated. For those systems with cooling coils, the chiller is modeled to meet the cooling coil load, and indirect or regenerative evaporative cooling is also modeled. The comparison of such widely differing technologies as open cycle solid desiccants and absorption cooling systems requires careful evaluation of the cooling supply air delivery system.

Our approach has been to use a standard DOE-2.1C simulation of a commercial building to develop the cooling load information. The building chosen for study is a medium-sized, 50,000 ft^2 (465 m^2), commercial office building which has been simulated using Weather Year for Energy Computation (WYEC) data in five cities: Miami, Atlanta, Fort Worth, Phoenix, and Washington, DC.

System hourly reports were evaluated and certain parameters were binned as a function of outdoor conditions. In particular the supply and return air conditions (temperature, humidity, flow volume) and the fan power are essential to determine the amount of cooling delivered to the space, which usually differs from the heat extraction rate at the cooling coil. The average conditions at each outdoor temperature and humidity bin are then used to perform a psychrometric calculation of the supply air delivery system for the different technologies being compared. The control strategy for the system must be modeled explicitly.

The performance of the system over an entire year is calculated by multiplying the energy used for each of the 30 to 40 bins by the number of hours of occurrence and then summing over all bins. A computer program, BINSYS (Bin Systems), has been written to evaluate the performance and to aggregate the results for an entire year.

The output from the program is the electrical power consumption for air distribution, parasitics, chiller, and heat rejection; the thermal energy input required to run the process; and water consumption of each component. If monthly bin-hours are provided, then the monthly total thermal energy input and the average input temperature can be calculated to evaluate the utilizability of solar energy to drive the cooling process.

Both advanced absorption and ventilation mode desiccant systems show promise of annual performance which is competitive with modern centrifugal chillers. Because ventilation mode desiccant systems can provide colder, dryer air much of the year, on an annual basis they can have lower fan power requirements than do comparable coil-based systems. Advanced absorption systems operated at 140 C have a performance comparable to real desiccant systems. The ability of solar energy to displace fossil fuels to operate absorption and desiccant systems will depend critically on the annualized cost of solar energy being competitive with the fossil fuel alternatives.

Cooling Technology Integration

A number of planning, review, and coordination activities were performed in FY 1987 in support of the overall DOE solar cooling program. A U.S./Israel Workshop on Absorption Technology was organized and held. Meetings were held that led to setting the research agenda for the second year of the joint U.S./Israel project on solar cooling. A report on the status of the DOE solar cooling program was prepared and distributed for review. A planning document was written to assist DOE in preparing a Multiyear Technology Plan for solar cooling. It is anticipated that similar activities in support of the DOE solar cooling program will continue in FY 1988.

PLANNED ACTIVITIES FOR FY 1988

Work will continue during FY 1988 on modeling the 1R cycle using the ASPEN solution method, and calculations using the HYBRID solution method will be used for comparison. Once the 1R cycle has been successfully modeled, plans call for using these techniques to model other advanced absorption cycles that have potential for use in future solar cooling systems.

Comparative analysis of the performance of advanced absorption and desiccant solar cooling systems will continue during FY 1988. The program BINSYS will be refined and applied to (1) incorporation of the most appropriate heating-mode capabilities into the leading cooling system models for desiccant and absorption systems, so that realistic analyses can be made for annual performance in a variety of climatic regions; and (2) coupling of the cooling and heating elements of the systems with appropriate solar collector subsystems, thereby modeling complete solar cooling systems.

REFERENCES

1. Warren, M. (1987), "Performance Improvements Attainable by Use of Regenerative Evaporative Cooling on Solar Cooling System Performance," Report LBID-1251.
2. Warren, M. and Wahlig, M. (1987), "Analysis and Comparison of Active Solar Desiccant and Absorption Cooling System Performance," LBL-24291. To be presented at the ASME Solar Energy Division Conference, 10-14 April 1988, Denver, CO. Submitted to the *Journal of Solar Energy Engineering.*
3. Warren, M. and Wahlig, M. (1985), "Performance Comparison of Absorption and Desiccant Solar Cooling Systems," in *Solar Engineering 1986—Proceedings of the ASME Solar Energy Division Conference,* Anaheim, CA, 14–17 1986, pp.270-5; LBL-20002.

Monitoring of Commercial Buildings*

M. Warren

LBL has a number of building energy research projects sponsored both by DOE and others that address technical and programmatic aspects of performance monitoring of commercial buildings, including the Building Energy-use Compilation and Analysis (BECA), Passive Systems and Materials, Solar Federal Buildings, and Active Solar Cooling.[1–5] As the result of this experience, LBL has recently participated in two projects: the Development of Commercial Buildings Monitoring Protocol, supported by Oak Ridge National Laboratory (ORNL), and HVAC Monitoring in Commercial Buildings, supported by the Solar Energy Research Institute (SERI).

*This work was supported by the Solar Energy Research Institute and Oak Ridge National Laboratory through the U.S. Department of Energy under Contract No. DE-AC03-76SF00098.

ACCOMPLISHMENTS DURING FY 1987

LBL has participated with ORNL as part of the Building Energy Retrofit Research Program in the draft and review of a commercial monitoring protocol guideline. The goal is to develop a consensus document which will assist researchers undertaking the study of commercial building energy use to collect information that will allow comparison of buildings across different studies. The developing protocol guideline has been prepared by ORNL and has been actively reviewed by LBL and others.

LBL has been working with SERI as part of the Solar Federal Buildings Program to identify the HVAC issues important for the macrodynamic methodology for determining the building thermal response.[6] During FY 1987 LBL identified a building, developed a measurement plan, assisted with instrumentation of the building, and analyzed the data from the Washington Association of Counties Building in Olympia, WA. Data from the building has been automatically collected once a day and periodically analyzed on a microcomputer. The focus of the analysis is to understand the performance of the heat pump and the variable volume and temperature, VVT, air distribution system using temperature, electrical energy use, and air flow measurements. A paper describing the work is in preparation.[7]

PLANNED ACTIVITIES FOR FY 1988

Depending on availability of funding, LBL plans to continue participation in the monitoring protocol development work and to work with other laboratories in the use of monitoring to understand building energy performance.

REFERENCES

1. Warren, M.L. (1984), "Energy Conservation Through Effective Building Control: Closing the Feedback Loop," *Proceedings of the ACEEE 1984 Summer Study on Energy Efficiency in Buildings,* Santa Cruz, CA, 14–22 August 1984; LBL-17898.
2. Warren, M. et al. (1985), "Instrumentation for Evaluating Integrated Lighting System Performance in a Large Commercial Building," *Proceedings of the National Workshop on Field Data Acquisition for Building and Equipment Energy Use Monitoring,* pp.71–80, Dallas, 16–18 October 1985; LBL-20087.
3. Warren, M. et al. (1986), "Evaluation of Integrated Lighting System Performance in a Large Daylighted Office Building," *Proceedings of the ACEEE 1986 Summer Study on Energy Efficiency in Buildings, 3,* 3.218–3.231, Santa Cruz, CA, 17–23 August 1986, LBL-21466.
4. Akbari, H., Warren, M., and Harris, J. (1987), "Monitoring and Control Capabilities of Energy Management Systems in Large Commercial Buildings," *ASHRAE Transactions 93,* pt. 1; LBL-21041.
5. Akbari, H. et al. (1987), "Use of Energy Management Systems for Performance Monitoring of Industrial Load-shaping Measures," accepted for publication in *Energy, the International Journal*; LBL-22689.
6. Burch, J. et al. (1986), "Macrodynamic Methods for Building Thermal Modeling," SERI Report 254/DRAFT/BLG962/TR-3044 (Nov. 1986).
7. Warren, M. and Burch, J. (1987), "Monitoring HVAC System Performance in a Small Office Building," submitted to ASHRAE Symposium, June 1988, Ottawa, Ontario.

PUBLICATIONS LIST

This list of publications for the Building Energy Systems Program covers the years 1985–1987. For earlier or more recent publications, please contact each group individually. Annual reports for earlier years are also available.

Active Solar Cooling

Building 90, Room 2024
Lawrence Berkeley Laboratory
Berkeley, CA 94720

1987

LBL-24291: "Analysis and Comparison of Active Solar Desiccant and Absorption Cooling System Performance," M. Warren and M. Wahlig. November 1987. To be presented at the ASME Solar Energy Division Conference, 10–14 April 1988, Denver, CO. Submitted to the *Journal of Solar Energy Engineering.*

LBID-1341: "Development of Improved Chiller Simulation Models," J. Rasson and M. Wahlig. LBL progress report on the U.S./Israel Joint Project on Solar Cooling.

1986

LBL-22828: "The Double-Effect Regenerative Absorption Heat Pump: Cycle Description and Experimental Test Results," J. Rasson, K. Dao, and M. Wahlig. Presented at the 1986 International Institute of Refrigeration Conference on Progress in the Design and Construction of Refrigeration Systems, Purdue University, 5–8 August 1986.

LBL-21837: "Fan Energy Use in Variable Air Volume Systems," P.W. Brothers and M.L. Warren. *ASHRAE Transactions,* vol. 92, part 2 (1986).

LBL-20180: "Impact of Operation and Control Strategy on Thermal Energy Storage System Performance," M.L. Warren. Presented at the 21st IECEC Intersociety Energy Conversion Engineering Conference, San Diego, CA, 25–29 August 1986.

LBL-20002: "Performance Comparison of Absorption and Desiccant Solar Cooling Systems," M.L. Warren and M. Wahlig. *Solar Engineering 1986—Proceedings of the ASME Solar Energy Conference,* pp. 270–275, Anaheim, CA, 14–17 April 1986.

LBL-19990: "Thermal Energy Storage for Solar Absorption Cooling Systems," P.W. Brothers, M.L. Warren, and M. Wahlig. June 1986. Submitted to the *ASME Journal of Solar Energy Engineering.* Also in *Solar Engineering 1986—Proceedings of the ASME Solar Energy Conference,* pp. 276–281, Anaheim, CA, 14–17 April 1986.

1985

LBL-13050: "Cost and Performance Goals for Commercial Active Solar Absorption Cooling Systems," M.L. Warren and M. Wahlig. *ASME Journal of Solar Energy Engineering,* vol. 107 (May 1985), p. 136.

Building Systems Analysis

Building 90, Room 2056
Lawrence Berkeley Laboratory
Berkeley, CA 94720

1987

LBL-24053: "An Estimate of Aggregate Energy Savings Due to the ICP Program," W.L. Carroll, R. Kammerud, B. Birdsall, B. Lebot, B. Hatfield, and E. Vine. October 1987.

LBL-24052: "Energy Use in Minnesota Schools: Aggregate Performance and Perspectives on Energy Savings," E. Vine, B. Hatfield, B. Lebot, R. Kammerud, and W.L. Carroll. 1987. In draft form.

LBL-24002: "Daylighting Performance Evaluation Methodology Summary Report," B. Andersson, R. Hitchcock, B. Erwine, R. Kammerud, A. Seager, and A. Hildon. October 1987.

LBL-23605: "Nationwide Survey of Energy Conservation in Colleges and Universities: Institutional, Organizational, and Technical Characteristics," E. Vine, R. Kammerud, W.L. Carroll, B. Hatfield, and B.K. Barnes. September 1987.

LBL-23527: "An Examination of Technical Audit Calculations for Schools and Hospitals," B. Birdsall, B. Lebot, R. Kammerud, and B. Hatfield. June 1987.

LBL-19681: "Thermal Mass: BLAST Residential Parametric Simulations," W.L. Carroll, R. Sullivan, and A. Mertol. January 1987.

LBL-18020: "Thermal Mass: A Comparison of Measurements and BLAST Predictions for Six Test Cells in Two Climates," W.L. Carroll, A. Mertol, and R. Sullivan. January 1987.

1986

LBL-21530: "Energy Performance of Roof Apertures in Educational Buildings," D. Dumortier, B. Birdsall, W. Place, R. Kammerud, B. Andersson, W.L. Carroll, and K. Whitley. In draft form.

LBL-19590: "The Experimentally Measured Performance of a Linear Roof Aperture Daylighting System," F. Bauman, W. Place, B. Andersson, T.C. Howard, and J. Thornton. *ASHRAE Transactions,* vol. 93, part 1A (1987).

LBL-18838: "The Impact of Glazing Orientation, Tilt, and Area on the Energy Performance of Roof Apertures," W. Place, P. Coutier, M. Fontoynont, R. Kammerud, B. Andersson, F. Bauman, W.L. Carroll, M. Wahlig, and T.L. Webster. *ASHRAE Transactions,* vol. 93, part 1A (1987).

LBL-18398: "Effects of Occupant Issues on the Energy Performance of Two Existing Passive Commercial Buildings," B. Andersson, M. Kantrowitz, P. Albrand, T. Webster, M. Adegran, and R. Kammerud. *Building and Environment,* vol. 22, no. 1 (1987): pp. 3–12.

1985

LBL-21039: "Energy Use in Educational Buildings," T. Webster, B. Birdsall, R. Kammerud, K. Whitley, A. Mertol, and W.L. Carroll. In draft form.

LBL-19496: "Thermal Comfort of Building Occupants: A Preliminary Impact Assessment of Passive Strategies," P. Coutier,

R. Kammerud, and W. Place. *ASHRAE Transactions,* vol. 92, part 1 (1986).

LBL-19494: "An Integrating Window Pyranometer for Beam Daylighting Measurements in Scale-Model Buildings," F. Bauman, W. Place, J. Thornton, and T.C. Howard. *ASHRAE Transactions,* vol. 92, part 1 (1986).

LBL-18527: "Mt. Airy Library, A Qualitative Study of Daylighting in a Passive Solar Building," M. Adegran, B. Andersson, and W. Place. *Solar Energy,* vol.3, no.4 (1986): pp.200–222.

LBL-18524: "The Effect of Variations in Convection Coefficients on Thermal Energy Storage in Buildings: Part 2—Exterior Massive Walls and Simulations," H. Akbari, D. Samano, A. Mertol, F. Bauman, and R. Kammerud. *Energy and Buildings,* vol.10, no. 1 (1987): pp. 29–47.

LBL-18523: "The Effect of Variations in Convection Coefficients on Thermal Energy Storage in Buildings: Part 1—Interior Partition Walls," H. Akbari, D. Samano, A. Mertol, F. Bauman, and R. Kammerud. *Energy and Buildings,* vol. 9 (1986): pp. 195–211.

LBL-18331: "Preliminary Assessment of Variable-Area, Light Reflecting Assemblies," T.C. Howard, W. Place, B. Andersson, J. Thornton, F. Bauman, R. Kammerud, and W.L. Carroll.

LBL-15230: "Aggregation of U.S. Population Centers Using Climate Parameters Related to Building Energy Use," B. Andersson, W.L. Carroll, and M. Martin. *ASHRAE Transactions,* vol. 91, no. 2B (1985). Also in *Journal of Climate and Applied Meteorology,* vol. 25 (no. 5, 1986): pp. 596–614.

Monitoring of Commercial Buildings

Order from Active Solar Cooling

1987

LBL-22689: "Use of Energy Management Systems for Performance Monitoring of Industrial Load-shaping Measures," H. Akbari, M. Warren, A. Almeida, D. Connell, and J. Harris. September 1987. Accepted for publication in *Energy, the International Journal.*

LBL-21041: "Monitoring and Control Capabilities of Energy Management Systems in Large Commercial Buildings," H. Akbari, M. Warren, and J. Harris. *ASHRAE Transactions,* vol. 93, part 1 (1987).

1986

LBL-21466: "Evaluation of Integrated Lighting System Performance in a Large Daylighted Office Building," M. Warren, C. Benton, R. Verderber, O. Morse, S. Selkowitz, and J. Jewell. *Proceedings of the ACEEE 1986 Summer Study on Energy Efficiency in Buildings,* vol. 3, pp. 3.218–3.231, Santa Cruz, CA, 17–23 August 1986.

"Macrodynamic Methods for Building Thermal Modeling," J. Burch, K. Subbarao, C. Cristensen, E. Hancock, M. Warren, and M. Krarti. November 1986. SERI Report 254/DRAFT/BLG962/TR-3044.

1985

LBL-20087: "Instrumentation for Evaluating Integrated Lighting System Performance in a Large Commercial Building," M.L. Warren, C. Benton, R. Verderber, O. Morse, S. Selkowitz, and J. Jewell. *Proceedings of the National Workshop on Field Data Acquisition for Building and Equipment Energy Use Monitoring,* pp. 71–80, Dallas, TX, 16–18 October 1985.

Simulation Research

Building 90, Room 3147
Lawrence Berkeley Laboratory
Berkeley, CA 94720

1987

LBL-23617: "Daylighting Design for the Pacific Museum of Flight: Energy Impacts," V. Bazjanac and F.C. Winkelmann. July 1987.

1986

LBL-22106: "Prototype Object Based System for HVAC Simulation," E.F. Sowell, W.F. Buhl, A.E. Erdem, and F.C. Winkelmann. Presented at the Second International Conference on System Simulation in Buildings, Liege, Belgium, December 1986.

LBL-21522: "Network Definition and Solution of Simulation Problem," J.L. Anderson. May 1986.

LBL-21489: "Advances in Building Energy Simulation in North America," F.C. Winkelmann. *Energy and Buildings,* vol. 11 (1987): p. 161.

LBL-20543: "Solar-Optical Properties of Multilayer Fenestration Systems," K.M. Papamichael and F.C. Winkelmann. *Proceedings of the Second International Daylighting Conference,* Long Beach, CA, November 1986.

1985

LBL-21144: "The Exponential Scheme for Computation of Natural Convection Flow in Enclosures," Lan Chieh Huang. 1985.

LBL-19870: "New Features of the DOE-2.1C Energy Analysis Program," W.F. Buhl, A.E. Erdem, J.H. Eto, J.J. Hirsch, and F.C. Winkelmann. June 1985. Presented at the Building Energy Simulation Conference, Seattle, WA, 21–22 August 1985.

LBL-19830: "Plan for the Development of the Next-Generation Building Energy Analysis Computer Software," J.J. Hirsch. Presented at the Building Energy Simulation Conference, Seattle, WA, 21–22 August 1985.

LBL-19829: "Daylighting Simulation in DOE-2: Theory, Validation, and Applications," F.C. Winkelmann and S. Selkowitz. June 1985. Presented at the Building Energy Simulation Conference, Seattle, WA, 21–22 August 1985.

LBL-19735: "Overview of the DOE-2 Building Energy Analysis Program," Building Energy Simulation Group. June 1985.

LBL-18981: "A Comparison of DOE-2.1C Prediction with Thermal Mass Test Cell Measurements," B. Birdsall. January 1985.

LAWRENCE BERKELEY LABORATORY
TECHNICAL INFORMATION DEPARTMENT
UNIVERSITY OF CALIFORNIA
BERKELEY, CALIFORNIA 94720